FIG. 1

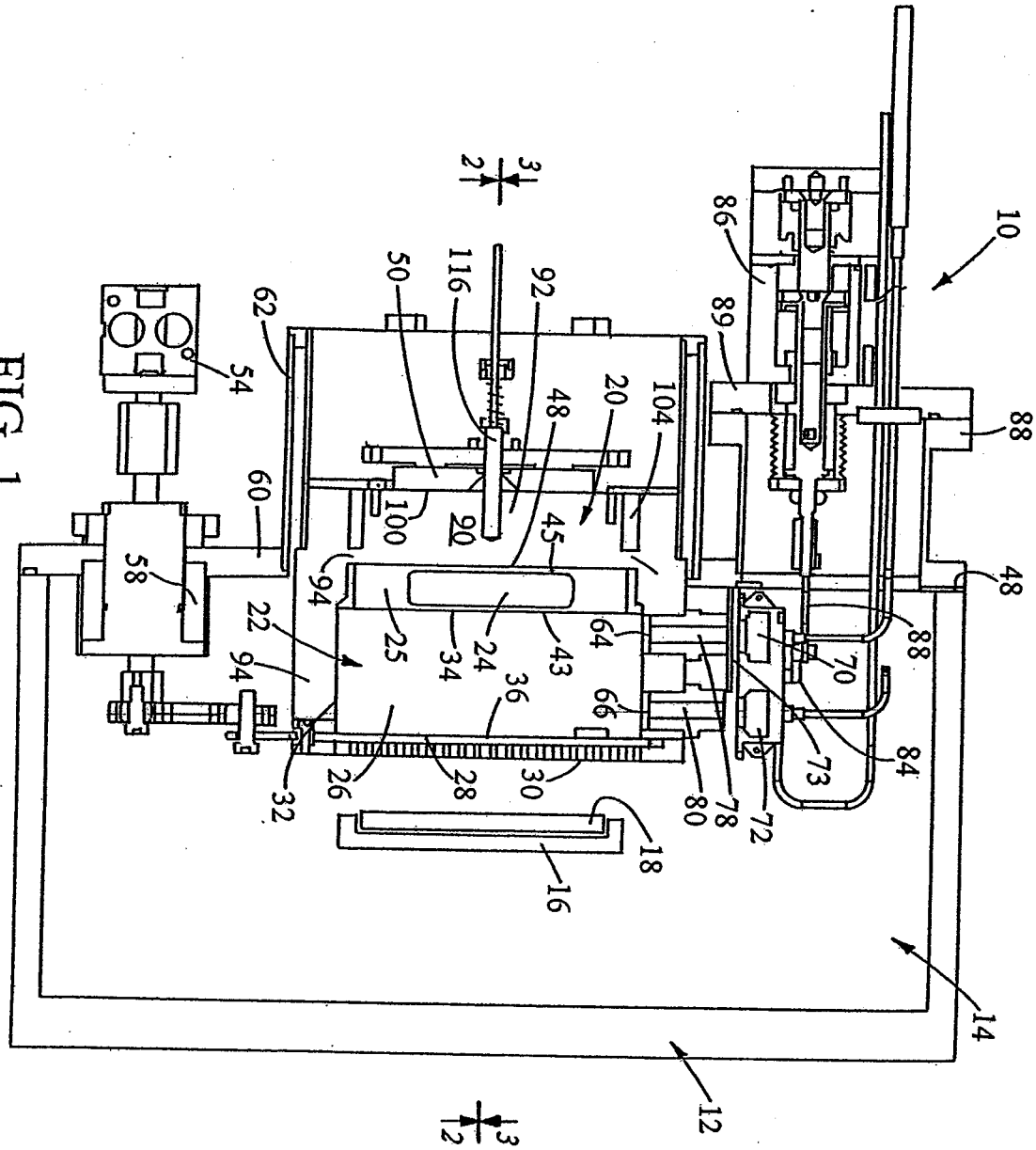
10
12
14
16
18
20
21
22
24
25
26
28
30
32
34
36
43
45
48
50
54
58
60
62
64
66
70
72
73
78
80
84
86
88
89
90
92
94
100
104
116

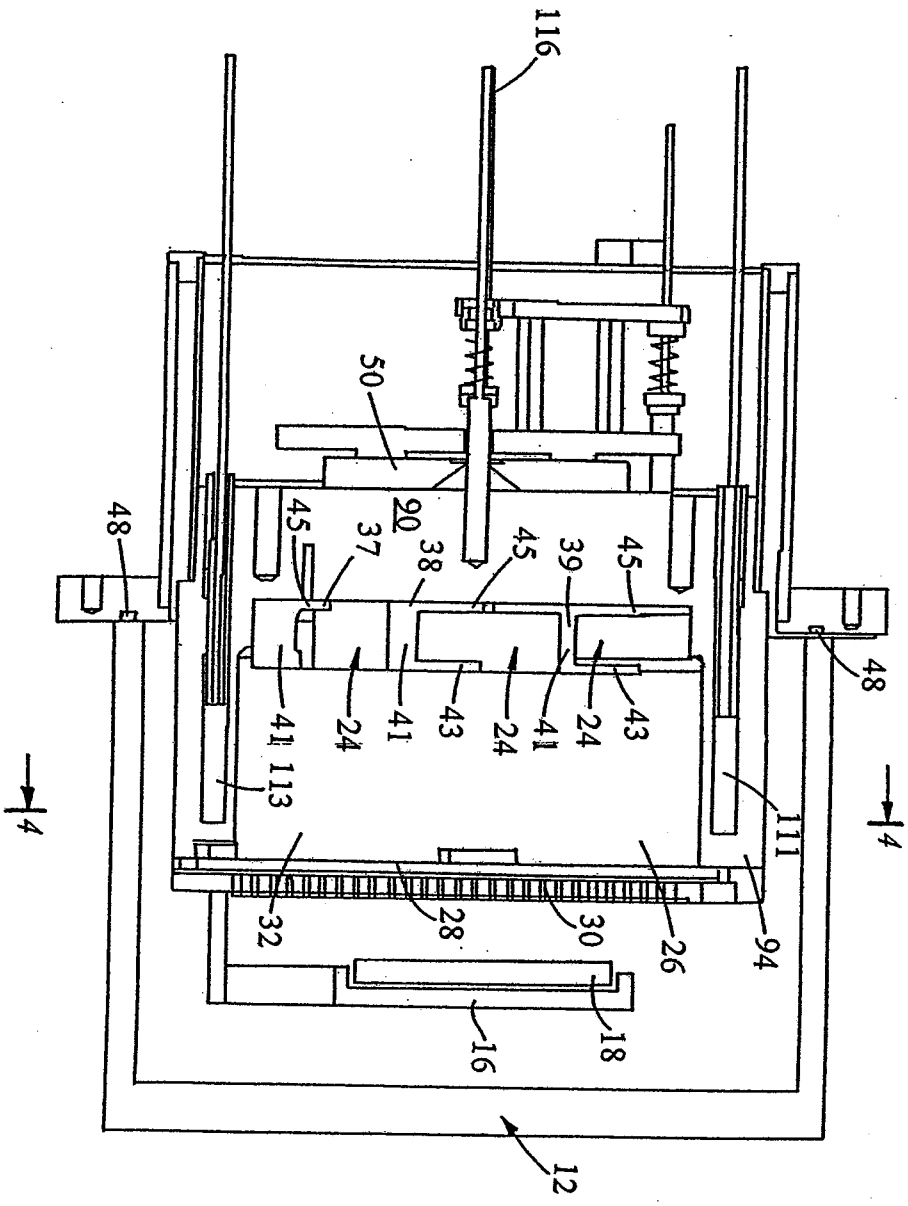
116
50
90
48
45
37
38
45
39
45
48
41
24
41
43
24
41
24
43
113
111
4
4
32
28
30
26
94
16
18
12

FIG. 2

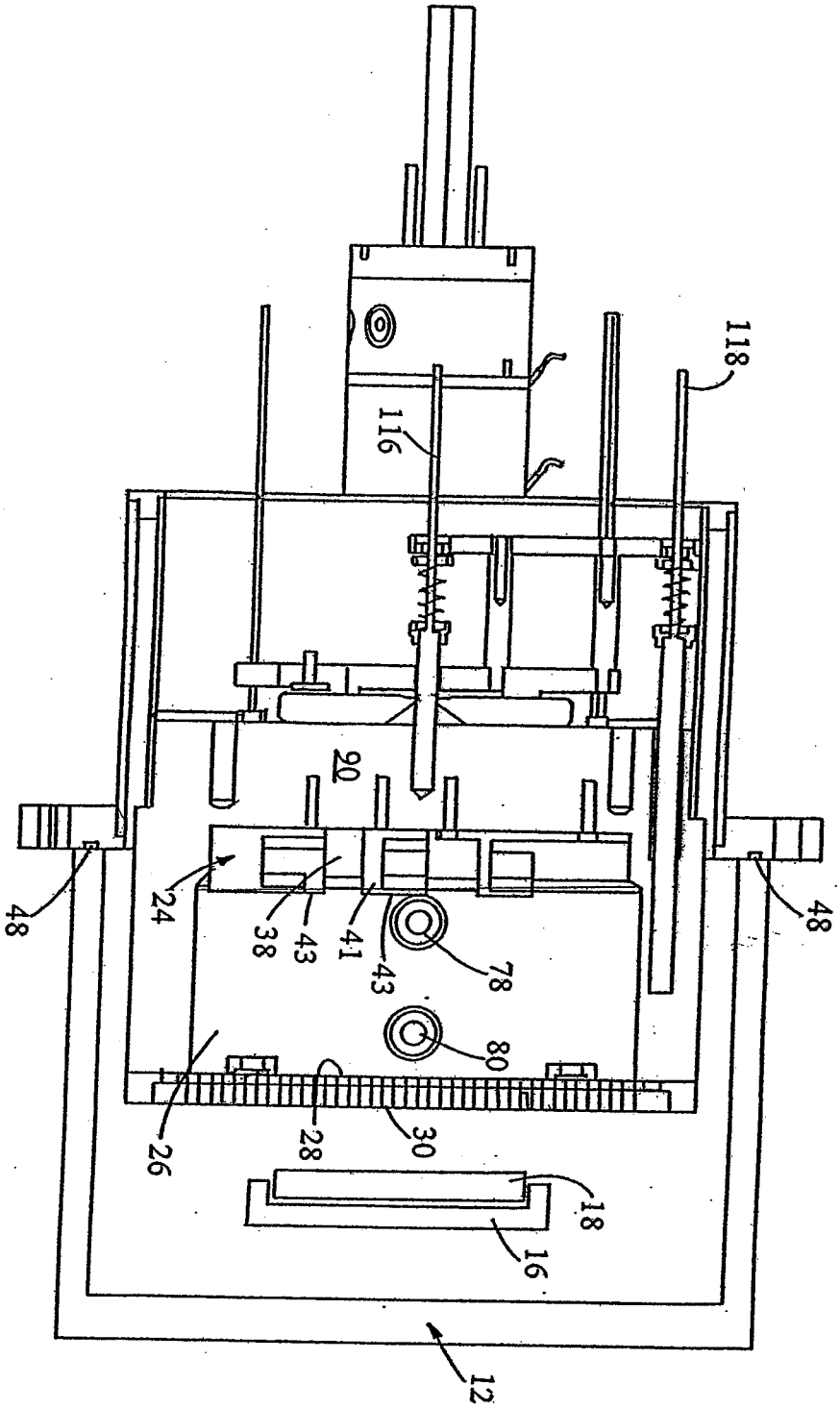


FIG. 3

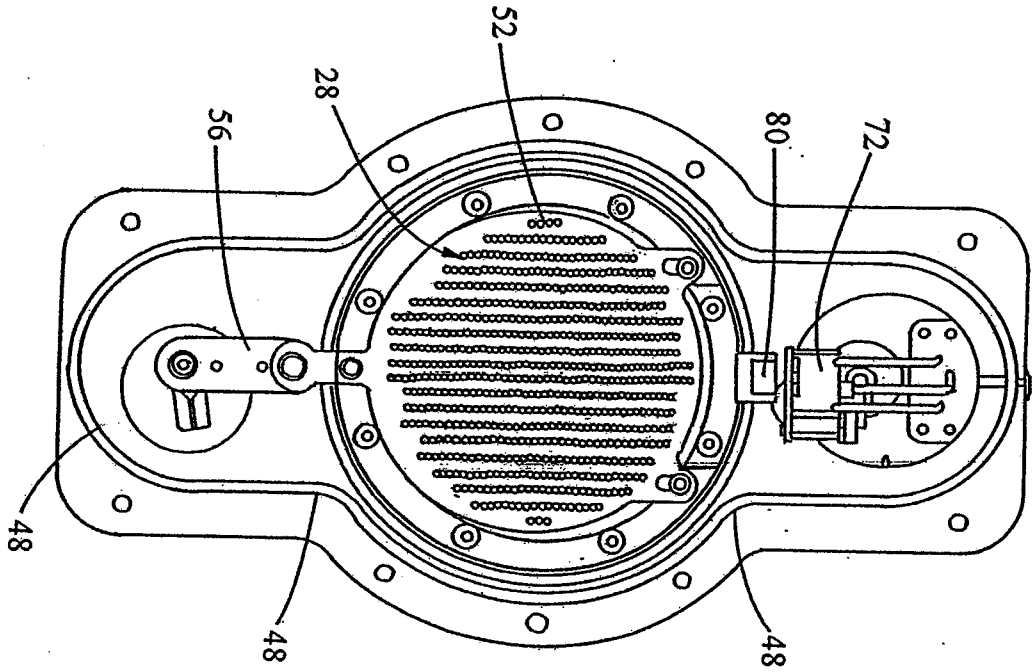


FIG. 4

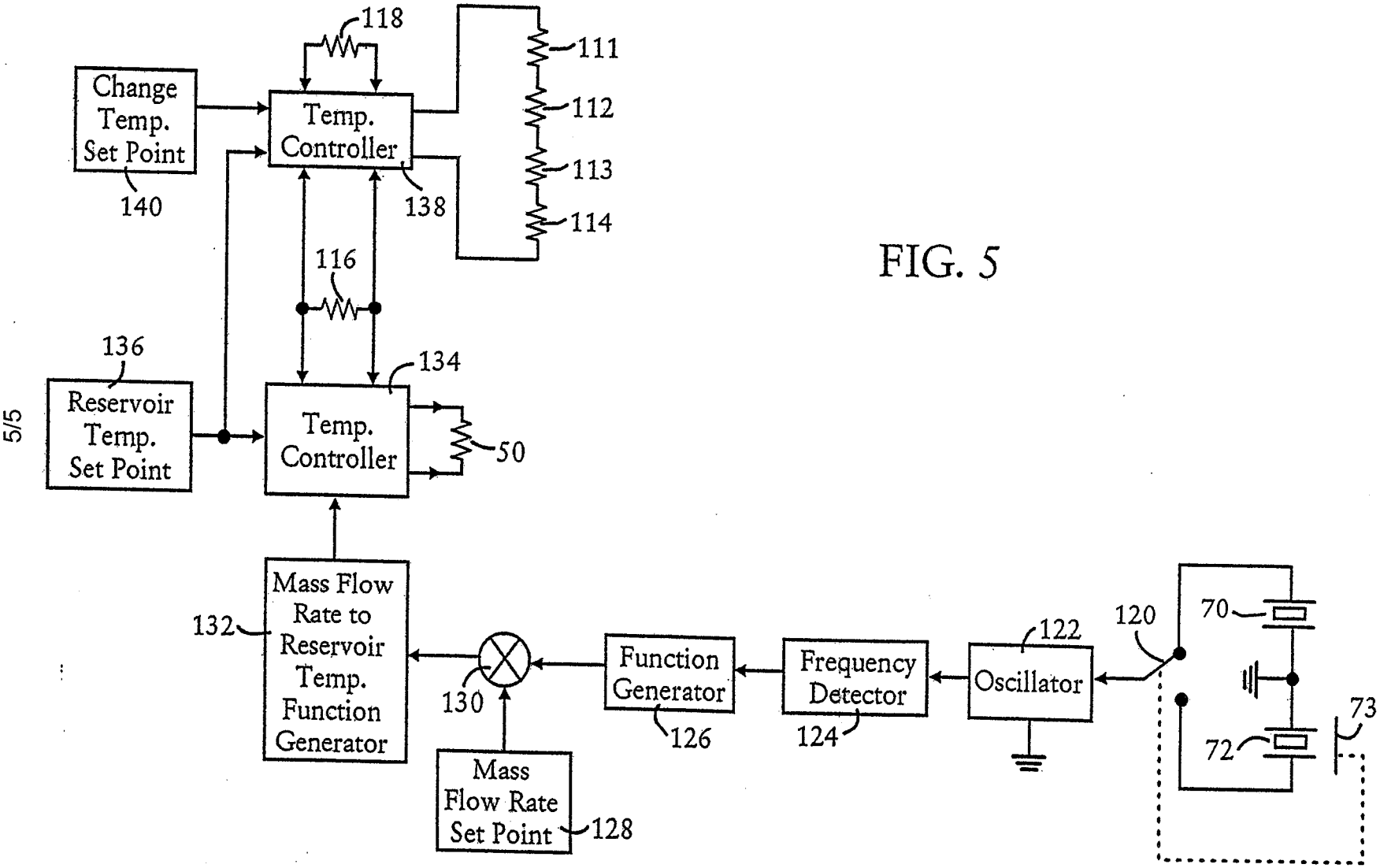
118
111
112
113
114
Change Temp. Set Point
140
Temp. Controller
138
116
136
134
Reservoir Temp. Set Point
Temp. Controller
50
Mass Flow Rate to Reservoir Temp. Function Generator
132
130
Function Generator
126
Frequency Detector
124
Oscillator
122
120
70
72
73
Mass Flow Rate Set Point
128

FIG. 5