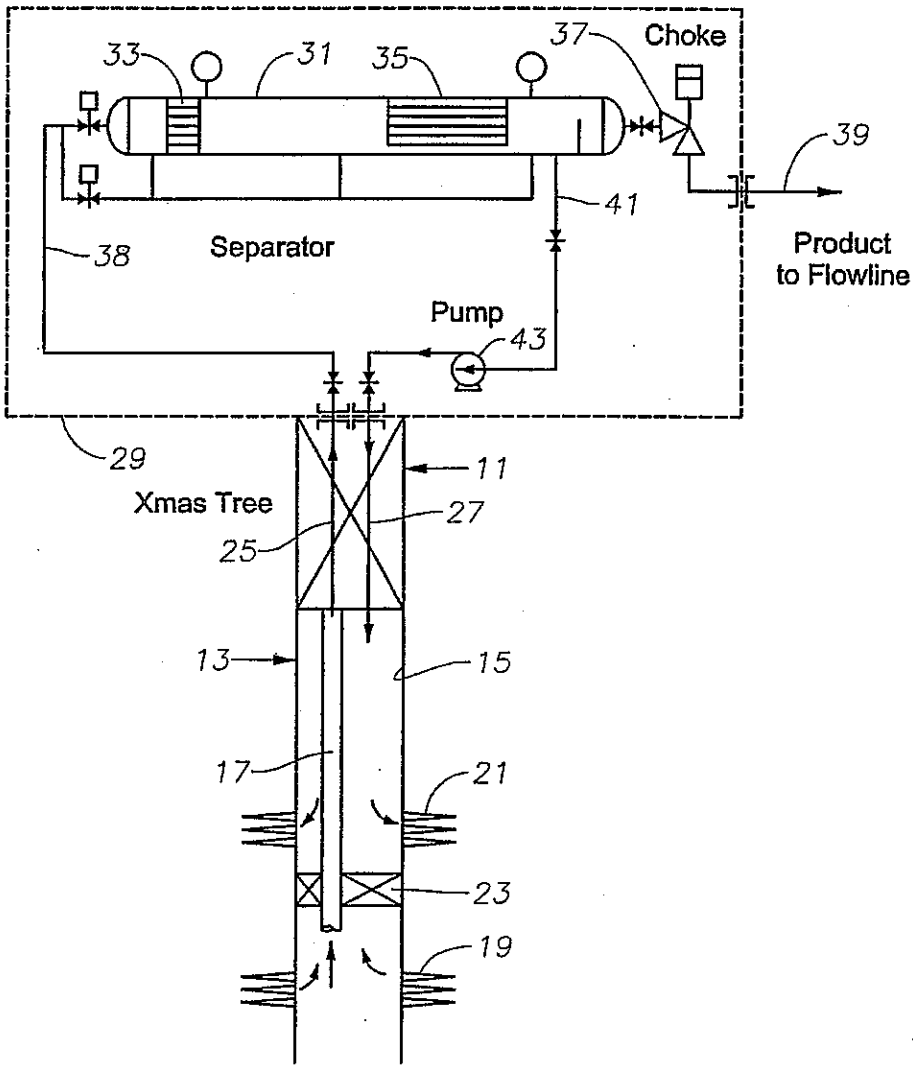
33
31
35
37
Choke
39
41
38
Separator
Product
to Flowline
Pump
43
29
Xmas Tree
11
27
25
13
15
17
21
23
19

Fig. 1

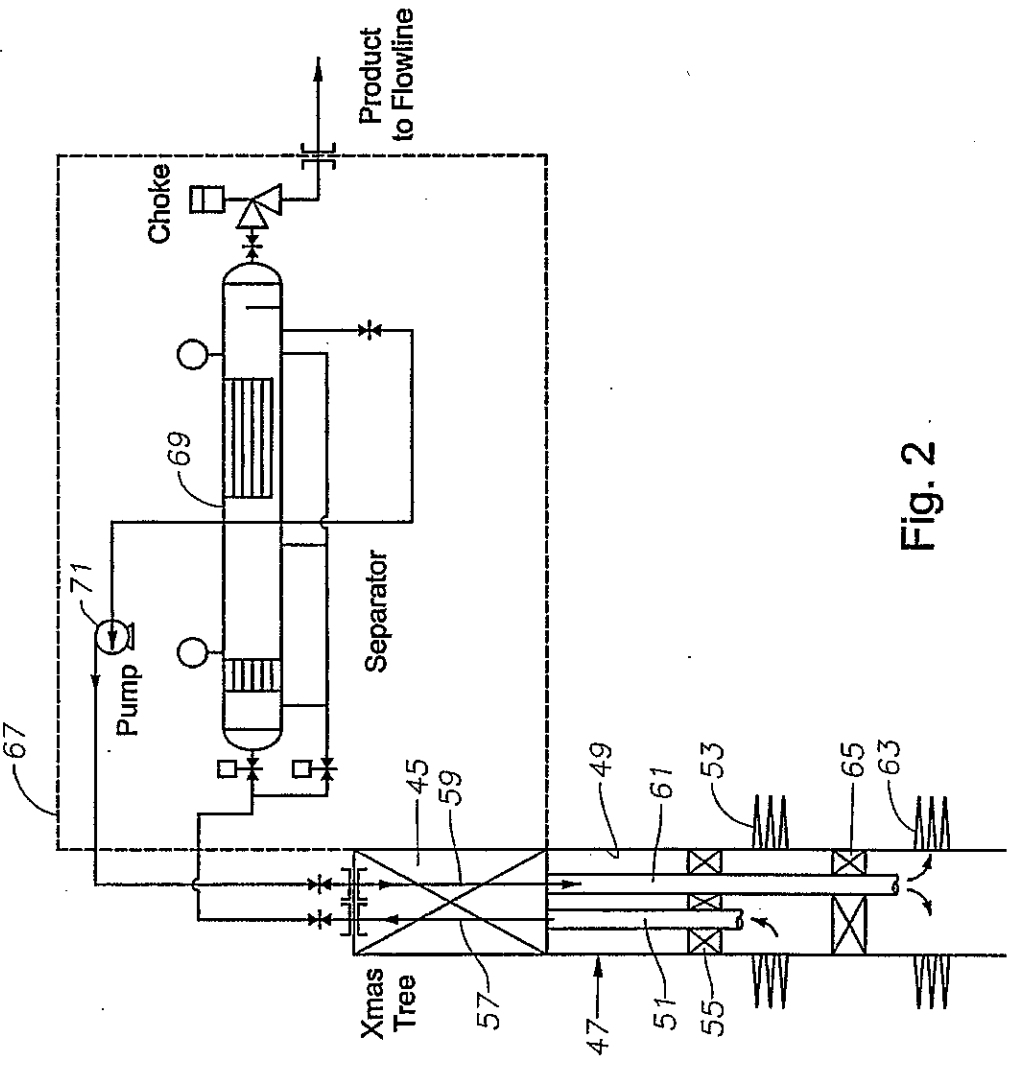
Product to Flowline
Choke
69
71
Pump
Separator
67
45
59
49
61
53
65
63
Xmas Tree
57
47
51
55

Fig. 2

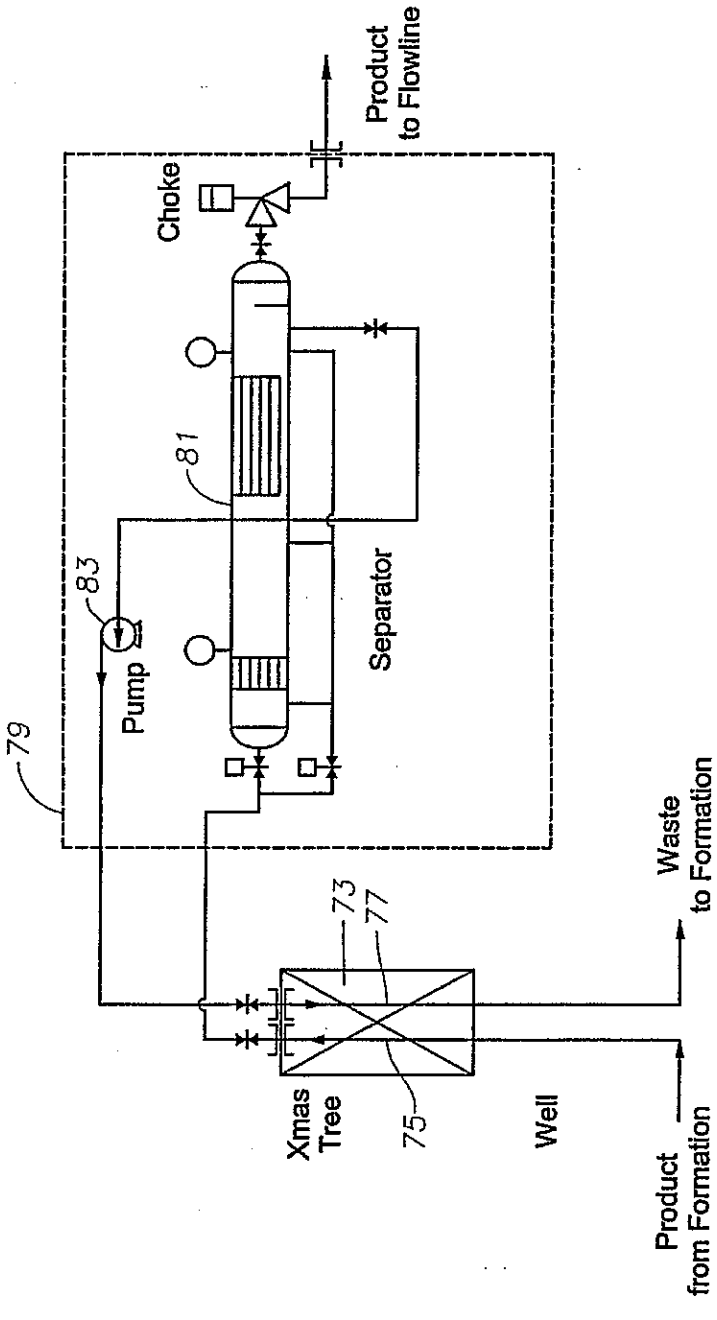
Product to Flowline
Choke
81
83
Pump
Separator
79
Waste to Formation
73
77
75
Xmas Tree
Well
Product from Formation

Fig. 3