FIG. 1

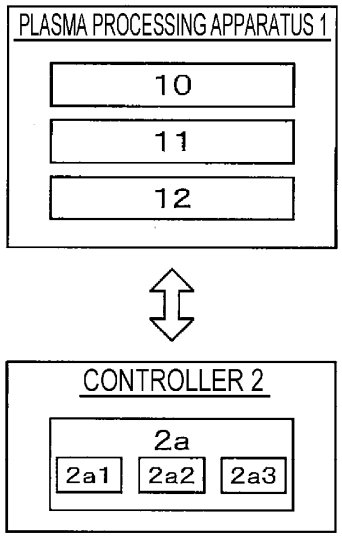
PLASMA PROCESSING APPARATUS 1
10
11
12
CONTROLLER 2
2a
2a1
2a2
2a3

FIG. 2

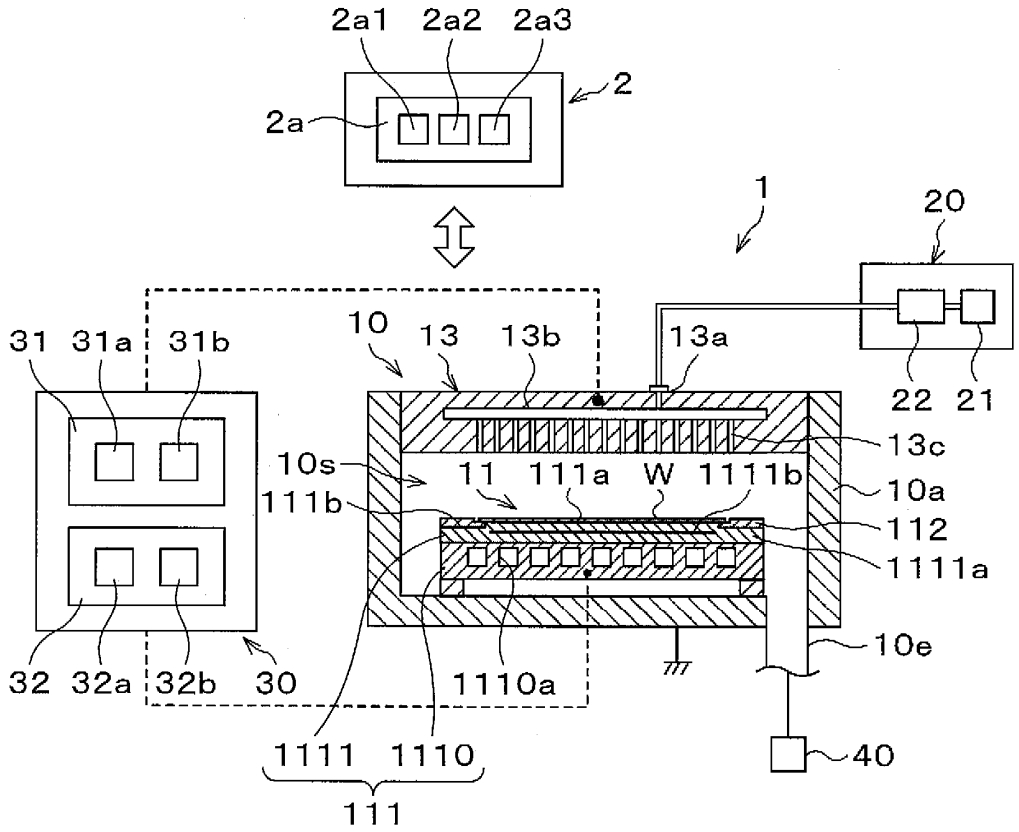
2a1
2a2
2a3
2
2a
1
20
31
31a
31b
10
13
13b
13a
22
21
13c
10s
11
111a
W
1111b
10a
111b
112
1111a
32
32a
32b
30
1110a
10e
1111
1110
111
40

FIG. 3

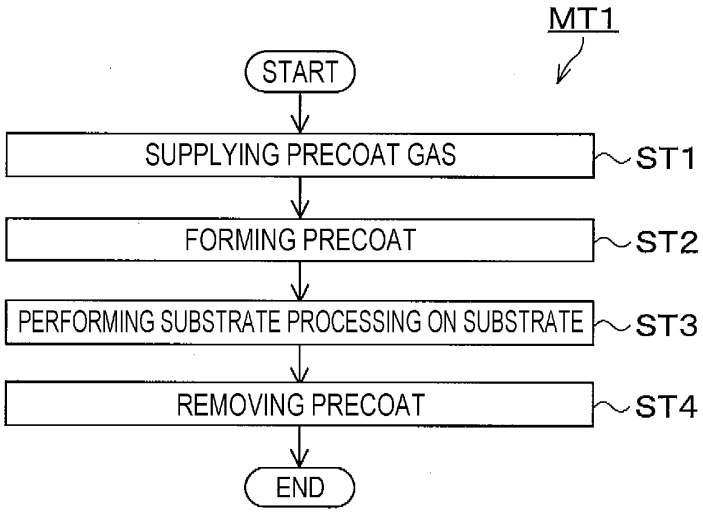

FIG. 4

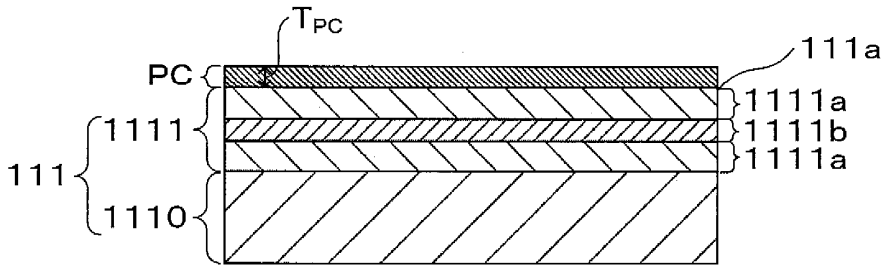

FIG. 5

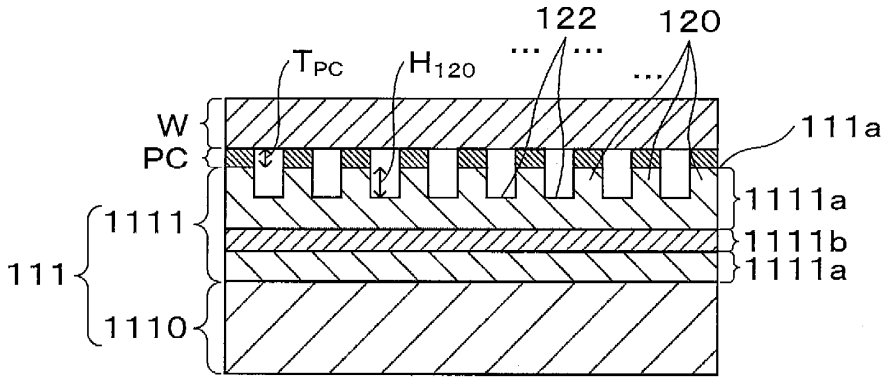

FIG. 6

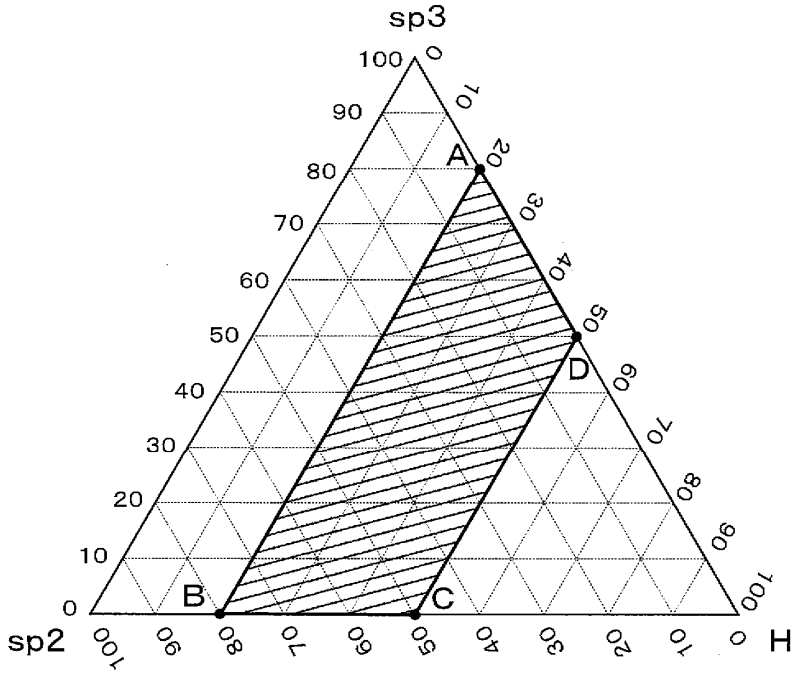

FIG. 7A

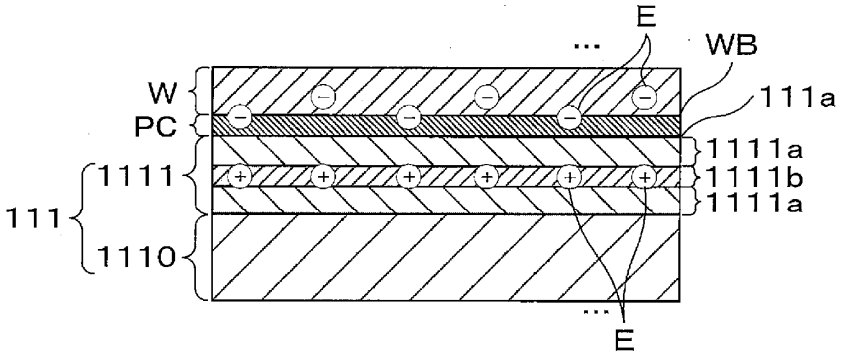

FIG. 7B

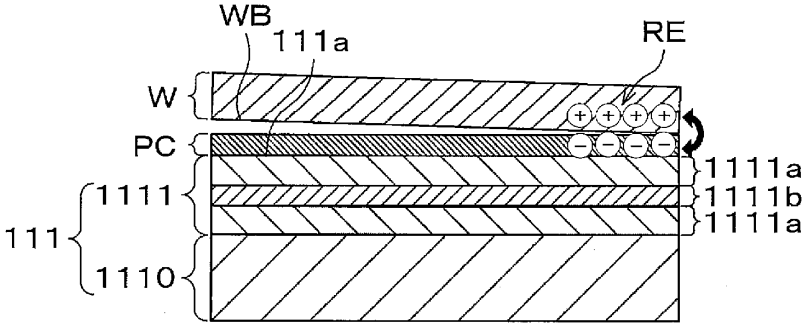

FIG. 7C

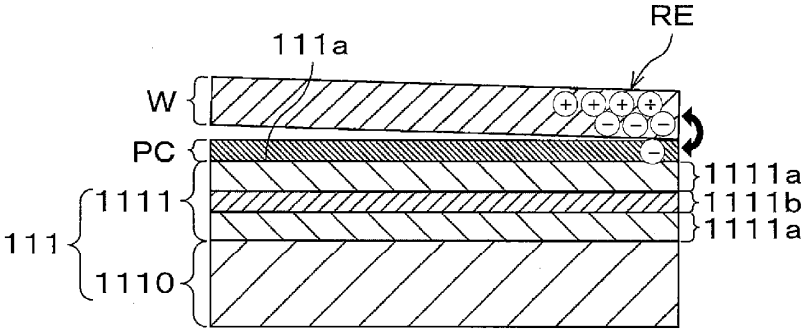

FIG. 7D

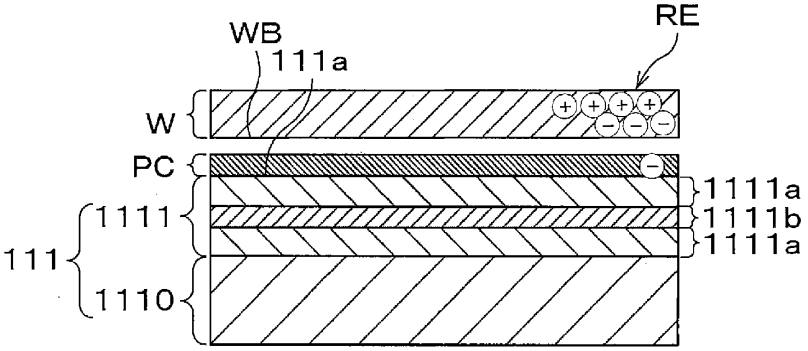

FIG. 8

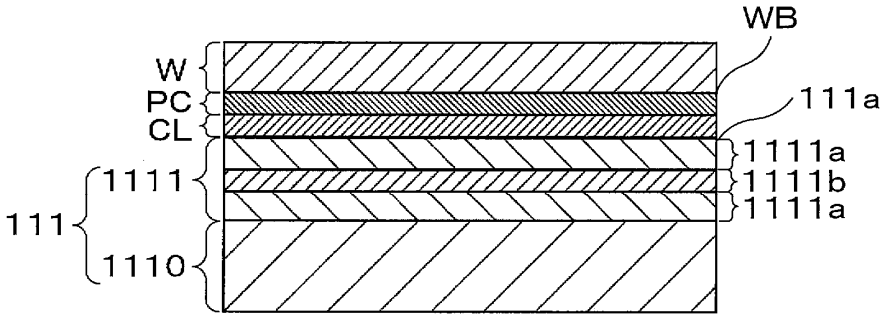
WB
W
PC
CL
111a
1111a
1111
1111b
111
1111a
1110

FIG. 9

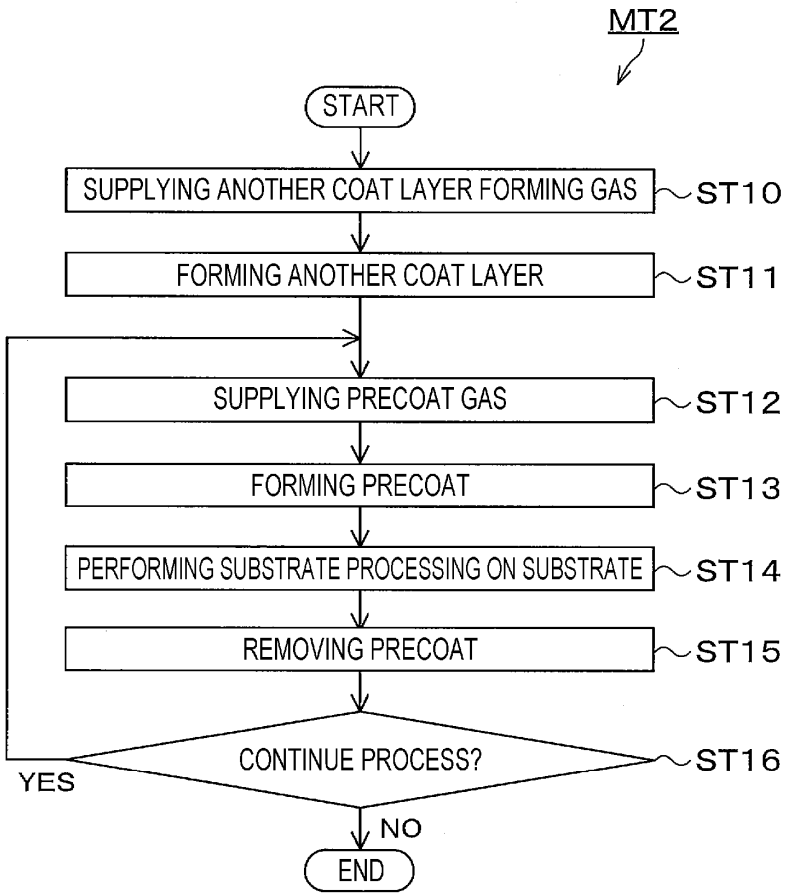
MT2
START
SUPPLYING ANOTHER COAT LAYER FORMING GAS
ST10
FORMING ANOTHER COAT LAYER
ST11
SUPPLYING PRECOAT GAS
ST12
FORMING PRECOAT
ST13
PERFORMING SUBSTRATE PROCESSING ON SUBSTRATE
ST14
REMOVING PRECOAT
ST15
CONTINUE PROCESS?
ST16
YES
NO
END

FIG. 10

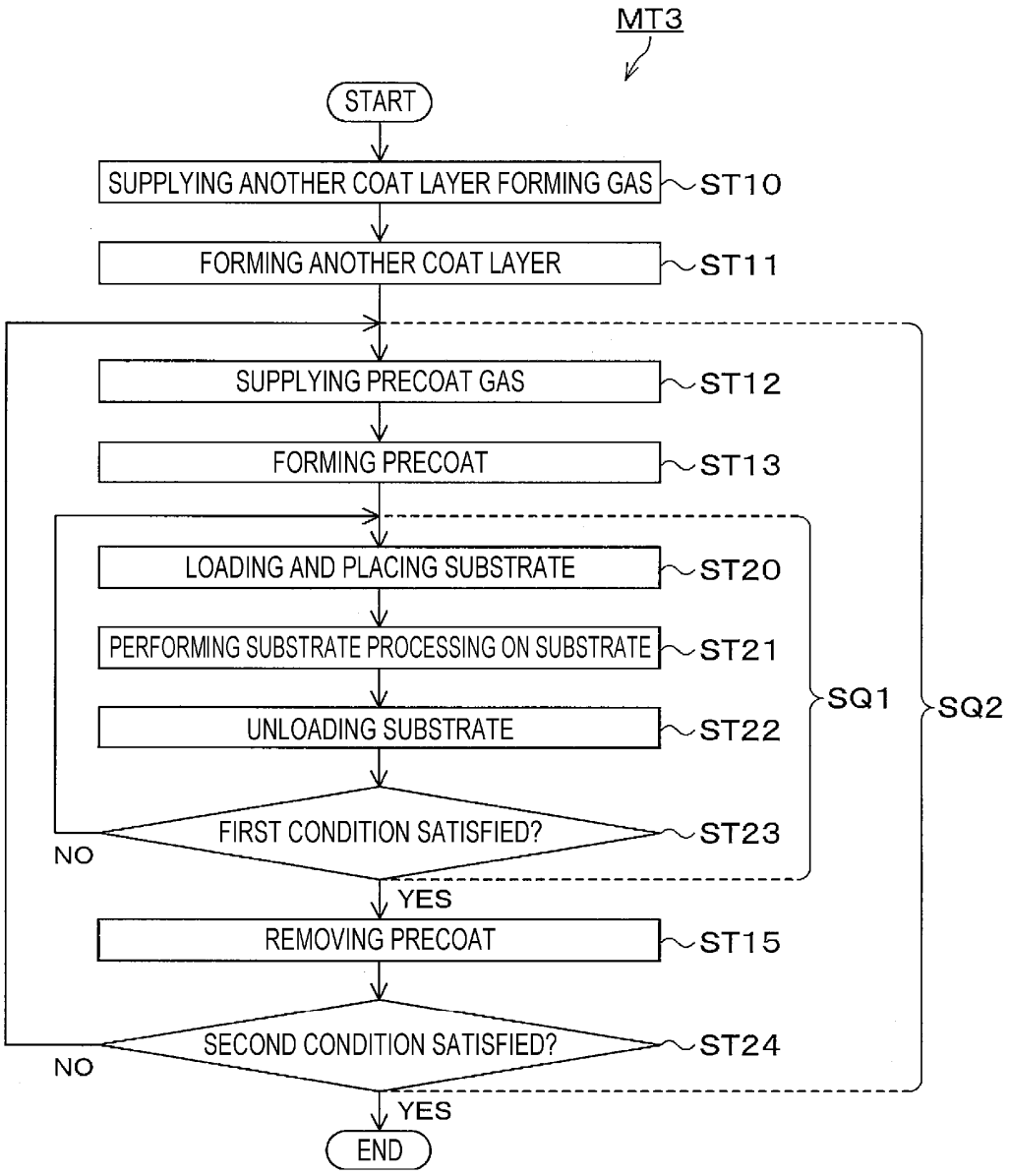
MT3
START
SUPPLYING ANOTHER COAT LAYER FORMING GAS
ST10
FORMING ANOTHER COAT LAYER
ST11
SUPPLYING PRECOAT GAS
ST12
FORMING PRECOAT
ST13
LOADING AND PLACING SUBSTRATE
ST20
PERFORMING SUBSTRATE PROCESSING ON SUBSTRATE
ST21
UNLOADING SUBSTRATE
ST22
FIRST CONDITION SATISFIED?
ST23
NO
YES
REMOVING PRECOAT
ST15
SECOND CONDITION SATISFIED?
ST24
NO
YES
END
SQ1
SQ2