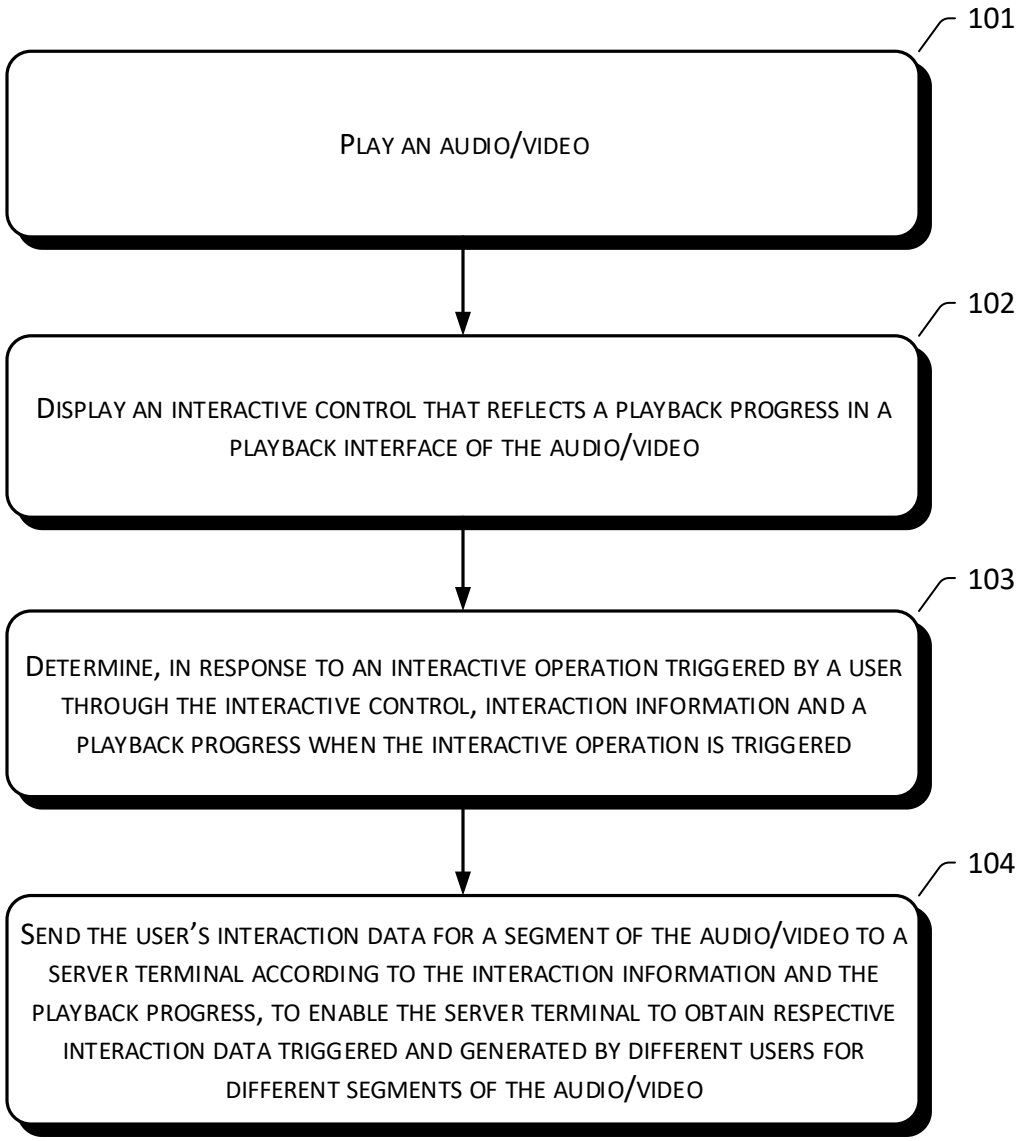
101
PLAY AN AUDIO/VIDEO
102
DISPLAY AN INTERACTIVE CONTROL THAT REFLECTS A PLAYBACK PROGRESS IN A PLAYBACK INTERFACE OF THE AUDIO/VIDEO
103
DETERMINE, IN RESPONSE TO AN INTERACTIVE OPERATION TRIGGERED BY A USER THROUGH THE INTERACTIVE CONTROL, INTERACTION INFORMATION AND A PLAYBACK PROGRESS WHEN THE INTERACTIVE OPERATION IS TRIGGERED
104
SEND THE USER'S INTERACTION DATA FOR A SEGMENT OF THE AUDIO/VIDEO TO A SERVER TERMINAL ACCORDING TO THE INTERACTION INFORMATION AND THE PLAYBACK PROGRESS, TO ENABLE THE SERVER TERMINAL TO OBTAIN RESPECTIVE INTERACTION DATA TRIGGERED AND GENERATED BY DIFFERENT USERS FOR DIFFERENT SEGMENTS OF THE AUDIO/VIDEO

FIG. 1

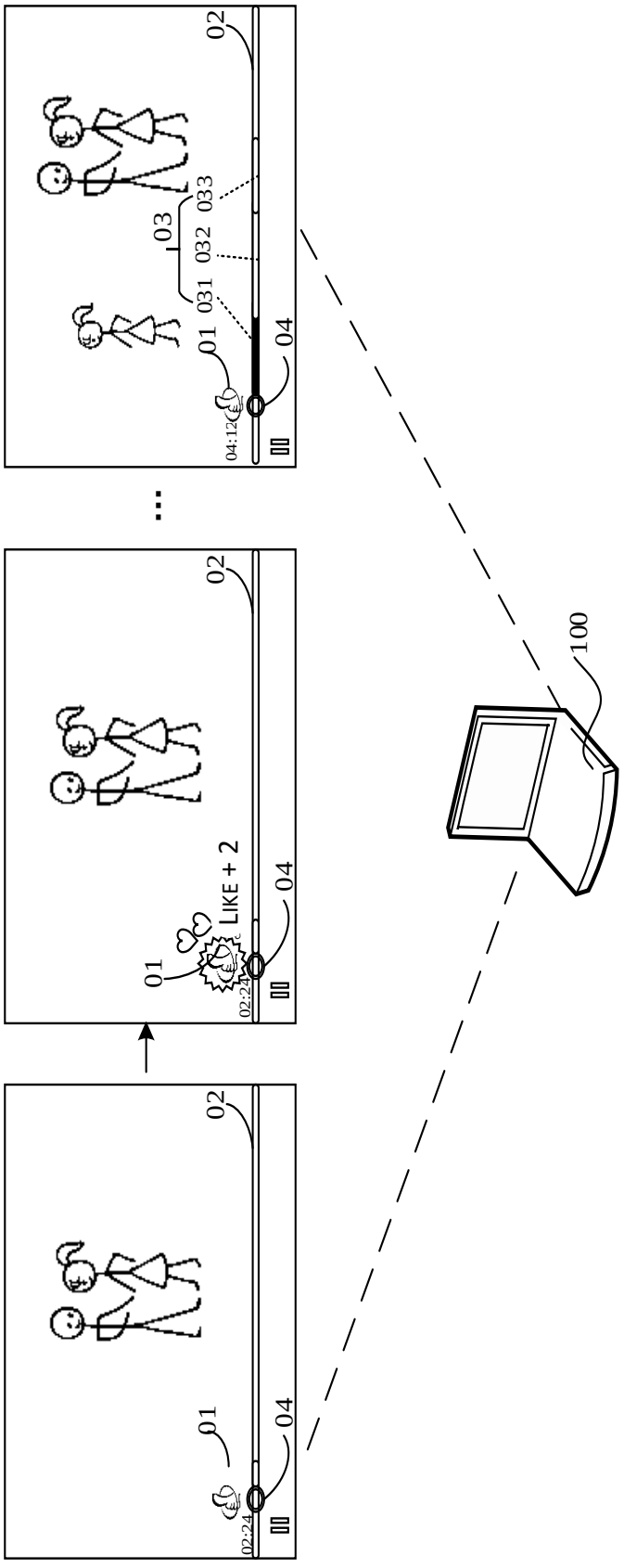

FIG. 2

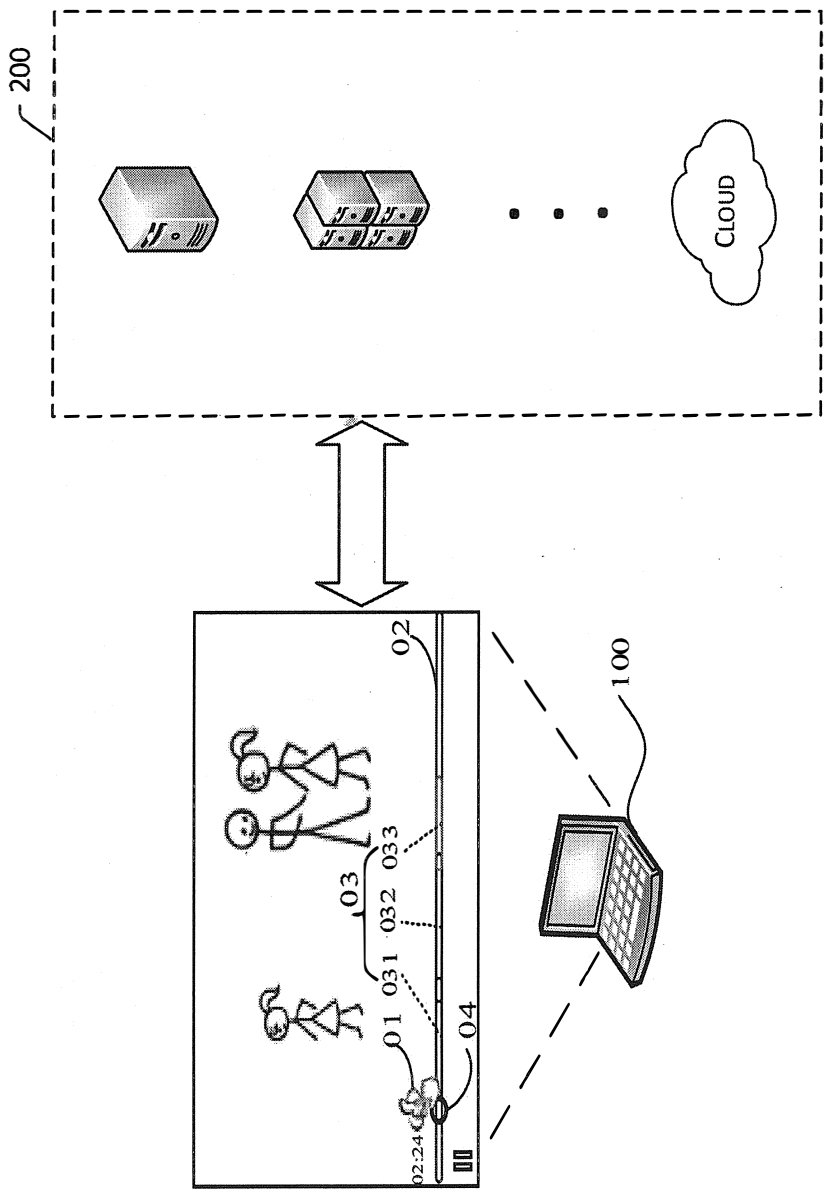

FIG. 3

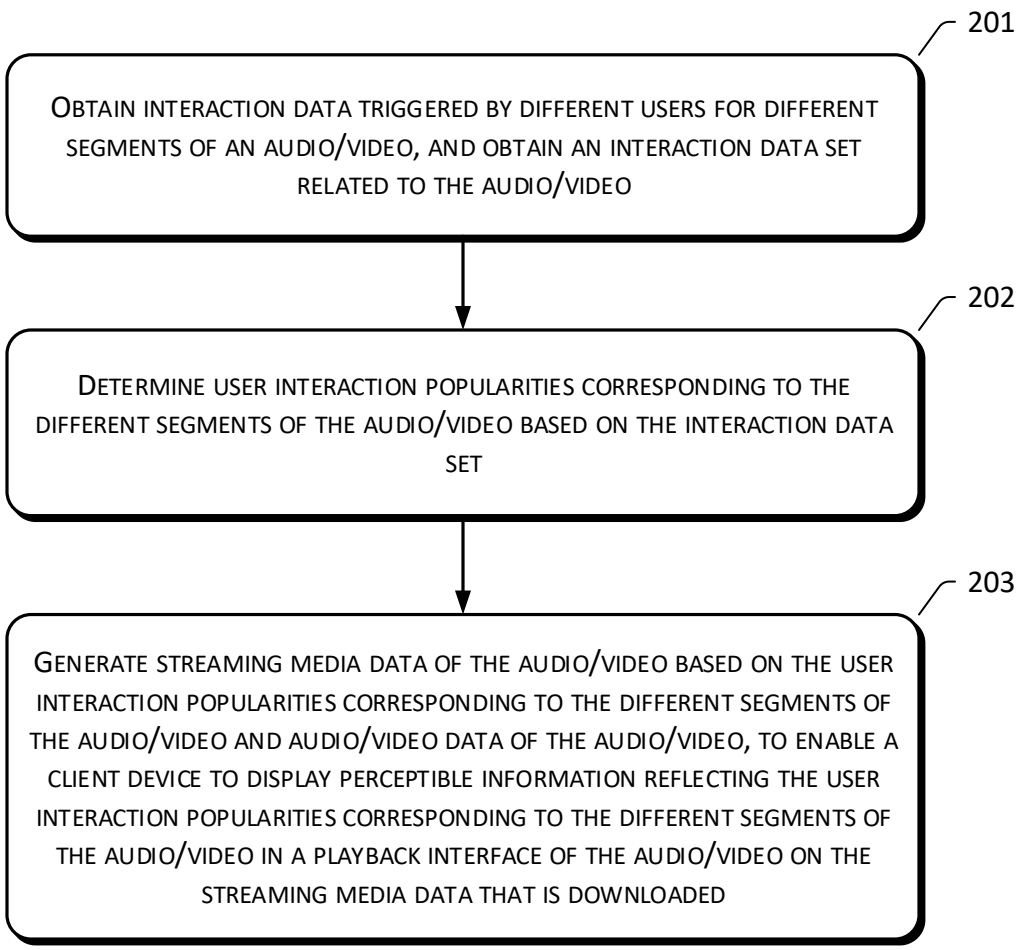
201
OBTAIN INTERACTION DATA TRIGGERED BY DIFFERENT USERS FOR DIFFERENT SEGMENTS OF AN AUDIO/VIDEO, AND OBTAIN AN INTERACTION DATA SET RELATED TO THE AUDIO/VIDEO
202
DETERMINE USER INTERACTION POPULARITIES CORRESPONDING TO THE DIFFERENT SEGMENTS OF THE AUDIO/VIDEO BASED ON THE INTERACTION DATA SET
203
GENERATE STREAMING MEDIA DATA OF THE AUDIO/VIDEO BASED ON THE USER INTERACTION POPULARITIES CORRESPONDING TO THE DIFFERENT SEGMENTS OF THE AUDIO/VIDEO AND AUDIO/VIDEO DATA OF THE AUDIO/VIDEO, TO ENABLE A CLIENT DEVICE TO DISPLAY PERCEPTIBLE INFORMATION REFLECTING THE USER INTERACTION POPULARITIES CORRESPONDING TO THE DIFFERENT SEGMENTS OF THE AUDIO/VIDEO IN A PLAYBACK INTERFACE OF THE AUDIO/VIDEO ON THE STREAMING MEDIA DATA THAT IS DOWNLOADED

FIG. 4

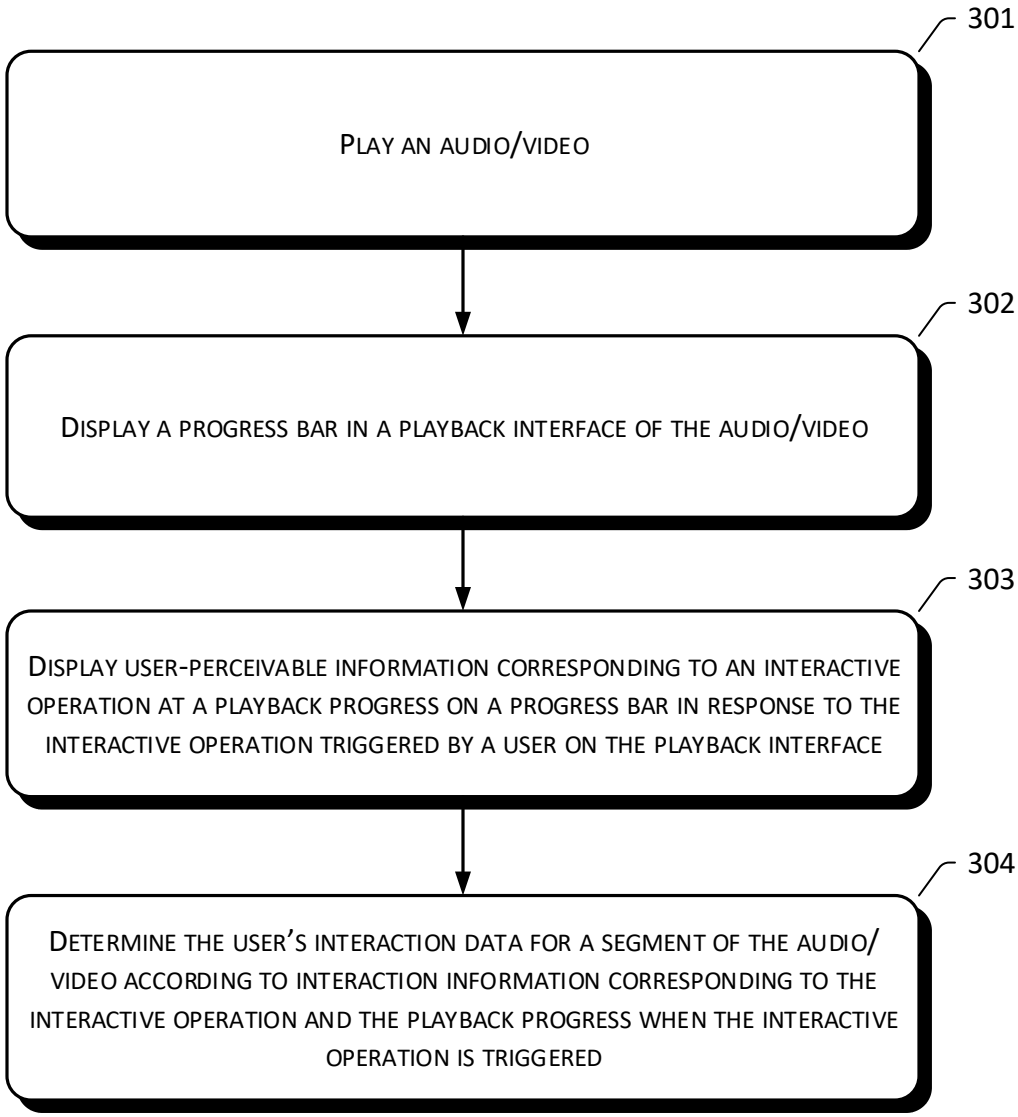
301
PLAY AN AUDIO/VIDEO
302
DISPLAY A PROGRESS BAR IN A PLAYBACK INTERFACE OF THE AUDIO/VIDEO
303
DISPLAY USER-PERCEIVABLE INFORMATION CORRESPONDING TO AN INTERACTIVE OPERATION AT A PLAYBACK PROGRESS ON A PROGRESS BAR IN RESPONSE TO THE INTERACTIVE OPERATION TRIGGERED BY A USER ON THE PLAYBACK INTERFACE
304
DETERMINE THE USER'S INTERACTION DATA FOR A SEGMENT OF THE AUDIO/VIDEO ACCORDING TO INTERACTION INFORMATION CORRESPONDING TO THE INTERACTIVE OPERATION AND THE PLAYBACK PROGRESS WHEN THE INTERACTIVE OPERATION IS TRIGGERED

FIG. 5

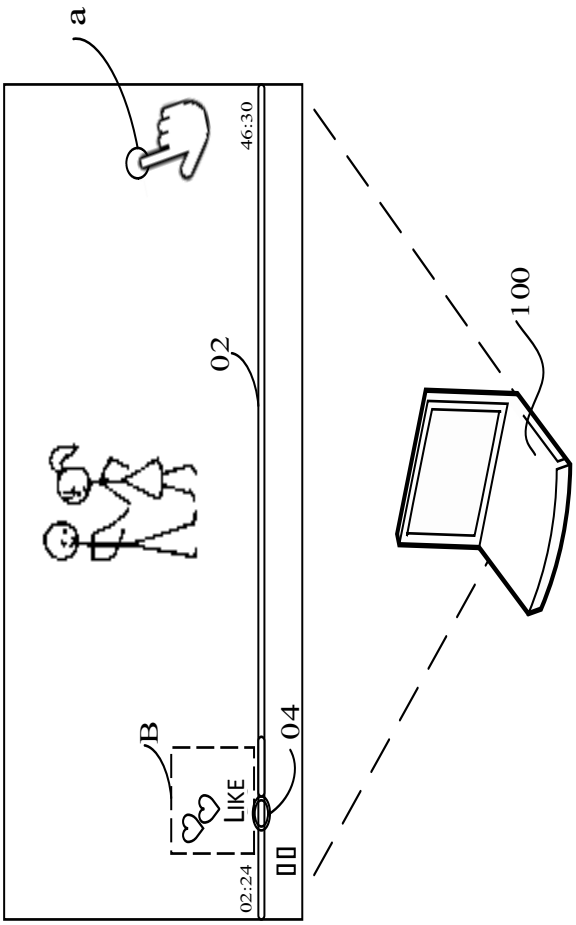

FIG. 6

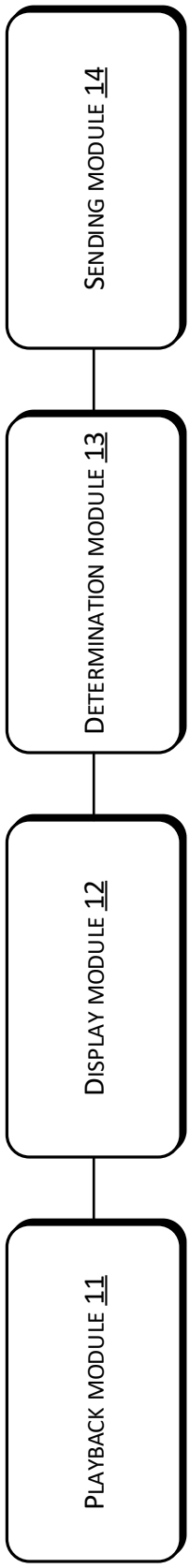
Playback module 11
Display module 12
Determination module 13
Sending module 14

FIG. 7

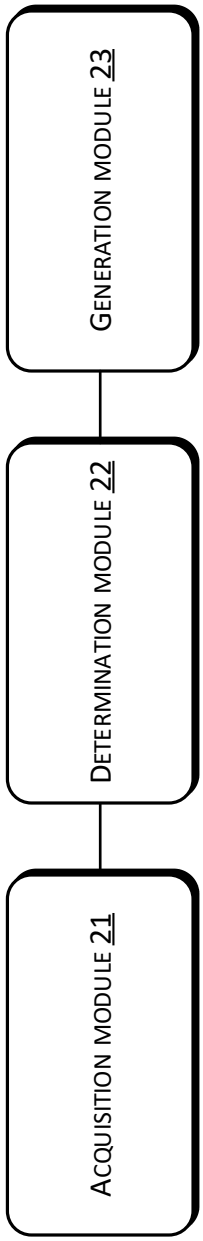
Acquisition module 21
Determination module 22
Generation module 23

FIG. 8

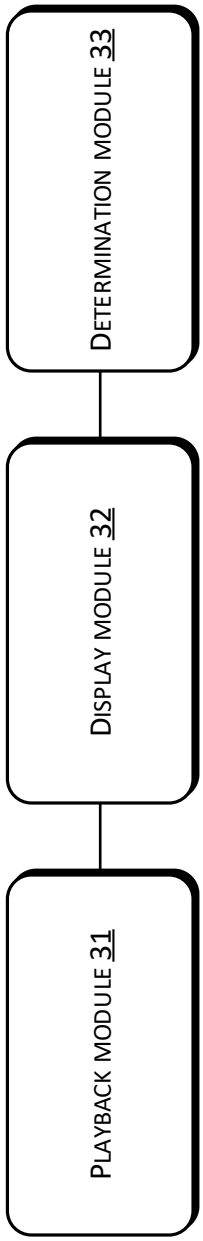
PLAYBACK MODULE 31
DISPLAY MODULE 32
DETERMINATION MODULE 33

FIG. 9

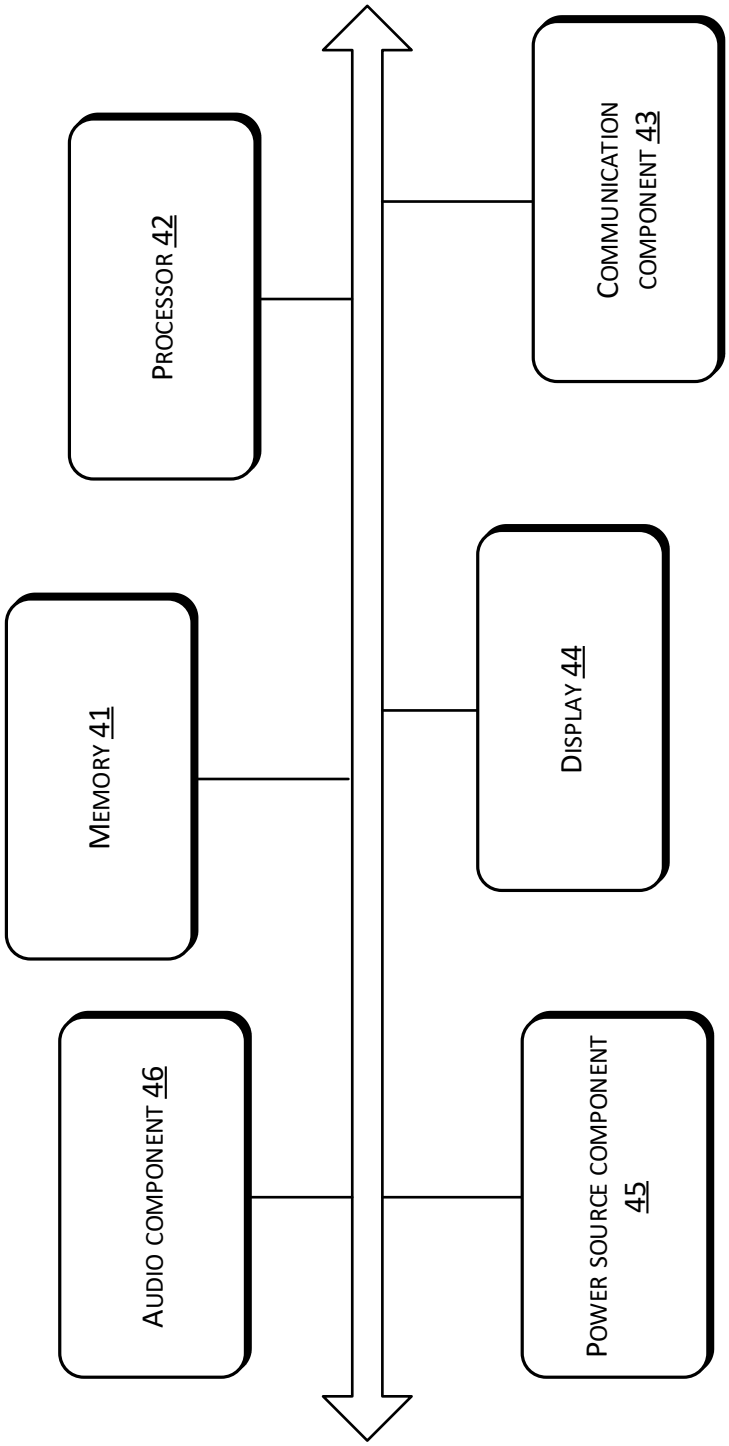
PROCESSOR 42
COMMUNICATION COMPONENT 43
MEMORY 41
DISPLAY 44
AUDIO COMPONENT 46
POWER SOURCE COMPONENT 45

FIG. 10