Fig. 1

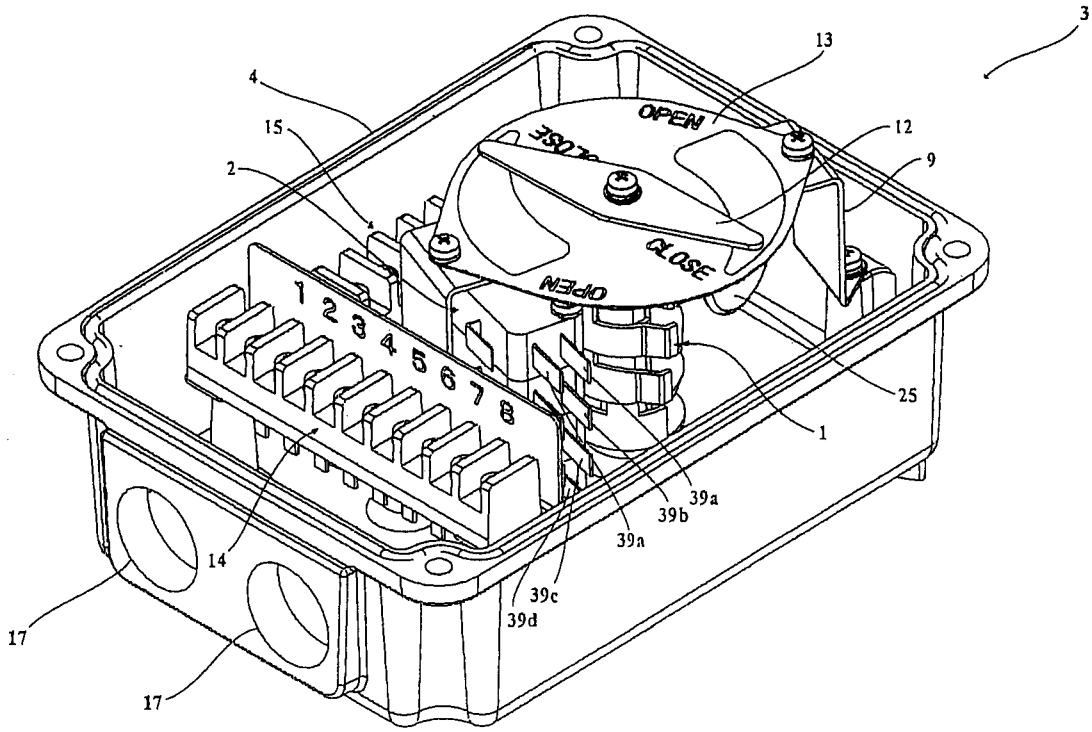
3
13
4
OPEN
15
12
2
9
CLOSE
OPEN
1 2 3 4 5 6 7 8
25
1
39a
39b
39n
14
39c
39d
17
17

Fig. 2

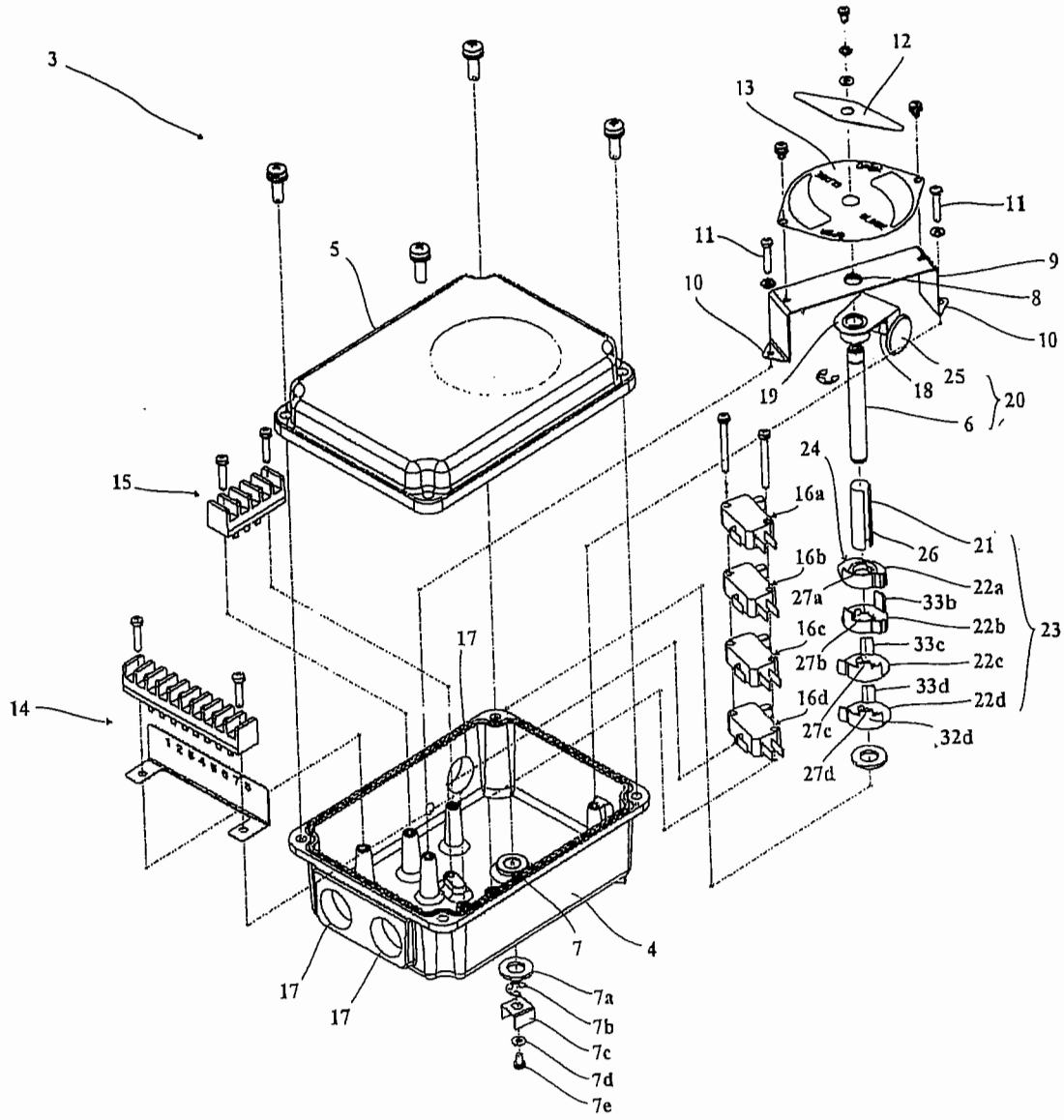
3
5
12
13
11
11
9
8
10
10
19
18
25
20
6
24
16a
21
26
16b
22a
27a
33b
22b
16c
33c
27b
22c
33d
16d
22d
27c
32d
27d
23
15
14
17
17
17
7
4
7a
7b
7c
7d
7e

Fig. 3

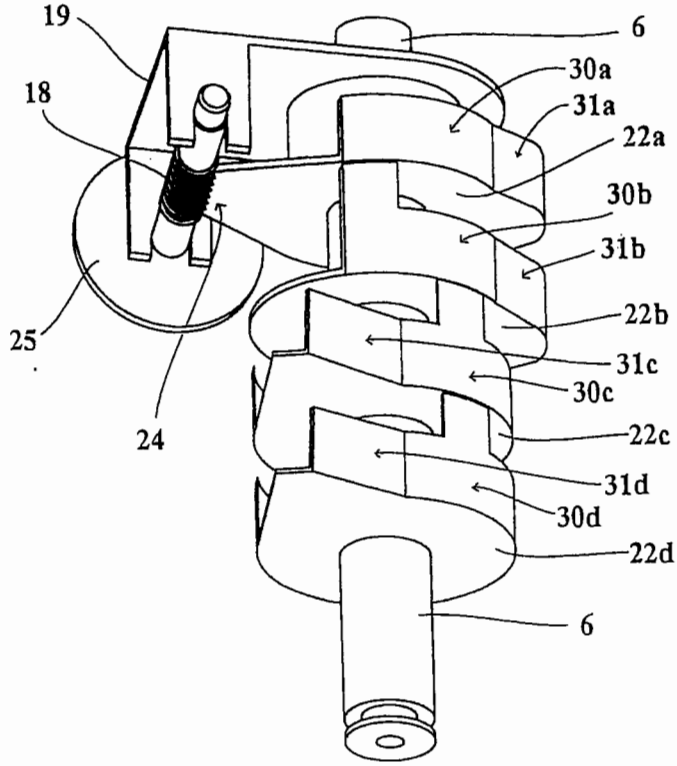

Fig. 4

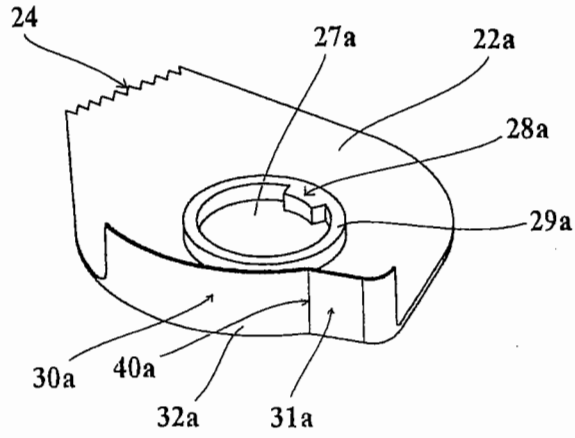

Fig. 5

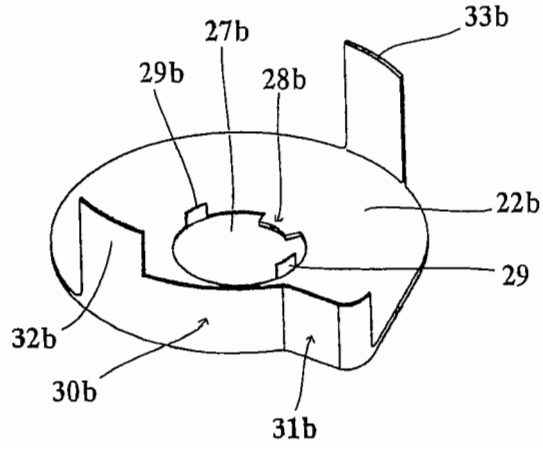

Fig. 6

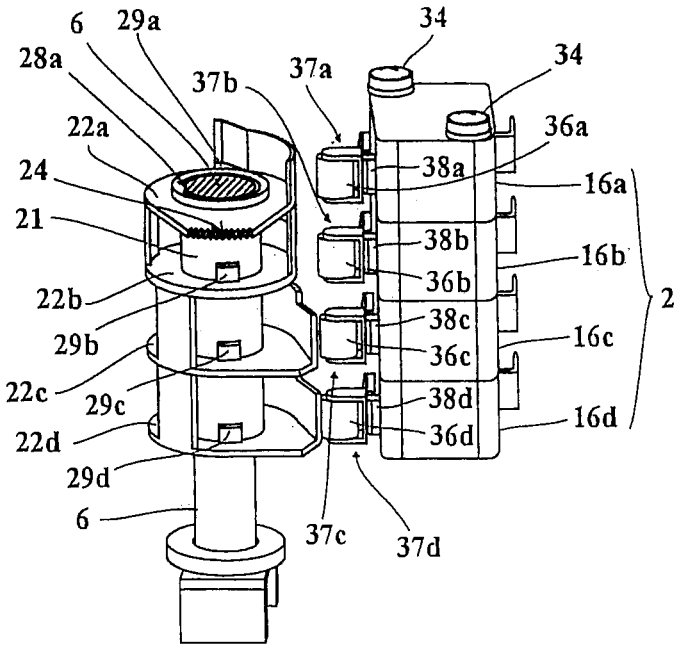
6
29a
34
28a
37b
37a
34
22a
36a
24
38a
16a
21
38b
16b
36b
22b
38c
2
29b
36c
16c
22c
29c
38d
22d
36d
16d
29d
6
37c
37d

Fig. 7

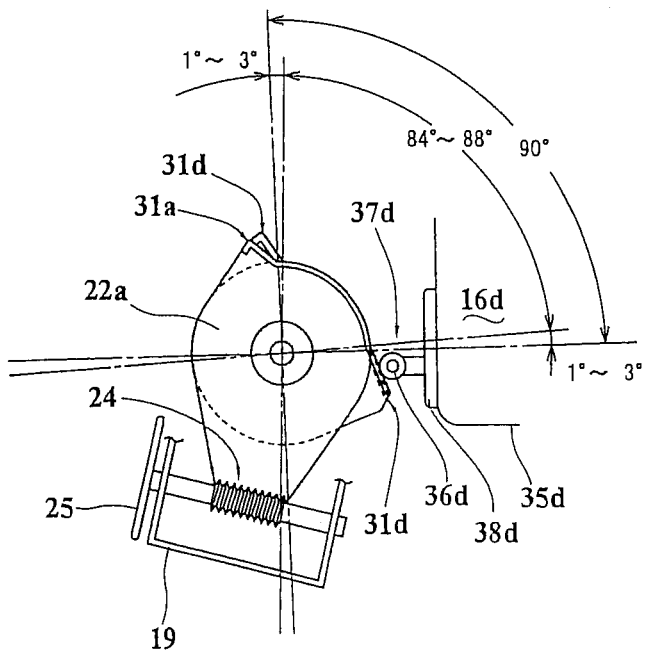
1°~ 3°
84°~ 88°
90°
31d
31a
37d
22a
16d
1°~ 3°
24
25
36d
35d
31d
38d
19