(12) INTERNATIONAL APPLICATION PUBLISHED UNDER THE PATENT COOPERATION TREATY (PCT)

(19) World Intellectual Property Organization
International Bureau

(43) International Publication Date
31 October 2013 (31.10.2013)

WIPO | PCT

(10) International Publication Number
WO 2013/163280 A1

(51) International Patent Classification:
*B63B 21/00* (2006.01)

(21) International Application Number:
PCT/US2013/037959

(22) International Filing Date:
24 April 2013 (24.04.2013)

(25) Filing Language: English

(26) Publication Language: English

(30) Priority Data:
61/638,262 25 April 2012 (25.04.2012) US

(71) Applicant: **DELMAR SYSTEMS, INC.** [US/US]; P.O. Box 129, Broussard, LA 70518 (US).

(72) Inventor: **PASTERNAK, Jason, David**; 19030 Canyon River Lane, Houston, TX 77084 (US).

(74) Agent: **LAMBERT, Jesse, D.**; Law Office of Jesse D. Lambert, LLC, 1018 Harding St., Suite 102 B, Lafayette, LA 70503 (US).

(81) Designated States *(unless otherwise indicated, for every kind of national protection available)*: AE, AG, AL, AM, AO, AT, AU, AZ, BA, BB, BG, BH, BN, BR, BW, BY, BZ, CA, CH, CL, CN, CO, CR, CU, CZ, DE, DK, DM, DO, DZ, EC, EE, EG, ES, FI, GB, GD, GE, GH, GM, GT, HN, HR, HU, ID, IL, IN, IS, JP, KE, KG, KM, KN, KP, KR, KZ, LA, LC, LK, LR, LS, LT, LU, LY, MA, MD, ME, MG, MK, MN, MW, MX, MY, MZ, NA, NG, NI, NO, NZ, OM, PA, PE, PG, PH, PL, PT, QA, RO, RS, RU, RW, SC, SD, SE, SG, SK, SL, SM, ST, SV, SY, TH, TJ, TM, TN, TR, TT, TZ, UA, UG, US, UZ, VC, VN, ZA, ZM, ZW.

(84) Designated States *(unless otherwise indicated, for every kind of regional protection available)*: ARIPO (BW, GH, GM, KE, LR, LS, MW, MZ, NA, RW, SD, SL, SZ, TZ, UG, ZM, ZW), Eurasian (AM, AZ, BY, KG, KZ, RU, TJ, TM), European (AL, AT, BE, BG, CH, CY, CZ, DE, DK, EE, ES, FI, FR, GB, GR, HR, HU, IE, IS, IT, LT, LU, LV, MC, MK, MT, NL, NO, PL, PT, RO, RS, SE, SI, SK, SM, TR), OAPI (BF, BJ, CF, CG, CI, CM, GA, GN, GQ, GW, ML, MR, NE, SN, TD, TG).

**Published**:

— *with international search report (Art. 21(3))*

*[Continued on next page]*

(54) **Title**: IN-LINE MECHANICAL DISCONNECT DEVICE

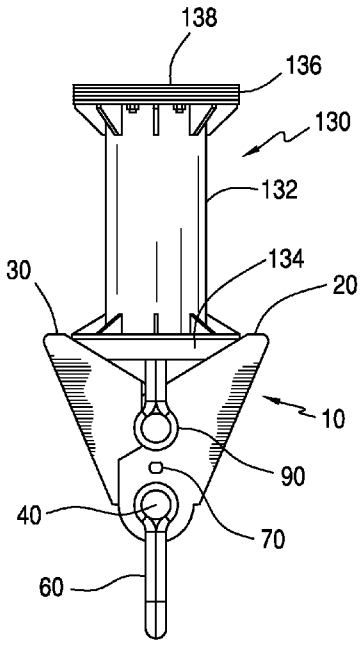


FIG. 17

(57) **Abstract**: A disconnect device, suitable for placement into a mooring line connecting a floating vessel to an anchor, has a pair of rotably connected lever arm members. In a first, closed position, the lever arm members are held closed by a shear pin. Mating slots in each lever arm member capture a mooring line component, such as the pin of a shackle, when the lever arm members are closed. A cylindrical centering device is placed in the mooring line between the disconnect device and the vessel, and bears against the lever arm members. Force applied to the centering device, whether by pulling it into a surface fairlead sheave or similar device, or by a subsea chaser device, forces the lever arm members apart, breaking the shear pin and releasing the device, thus disconnecting the mooring line.

WO 2013/163280 A1

— *before the expiration of the time limit for amending the claims and to be republished in the event of receipt of amendments (Rule 48.2(h))*