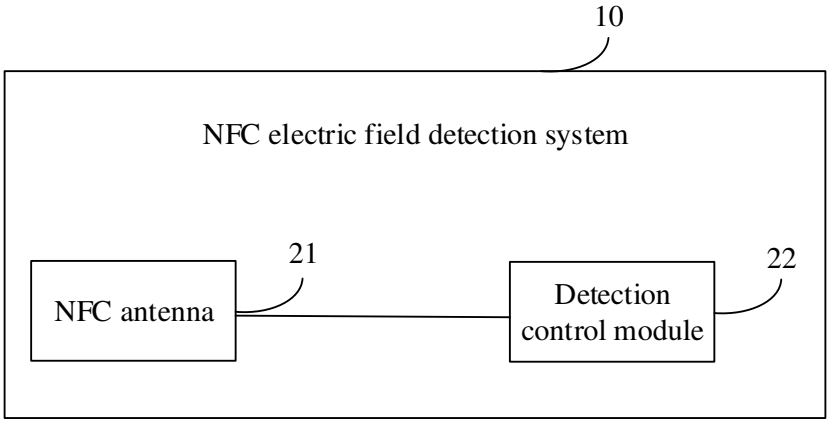
10
NFC electric field detection system
21
NFC antenna
22
Detection control module

FIG. 1

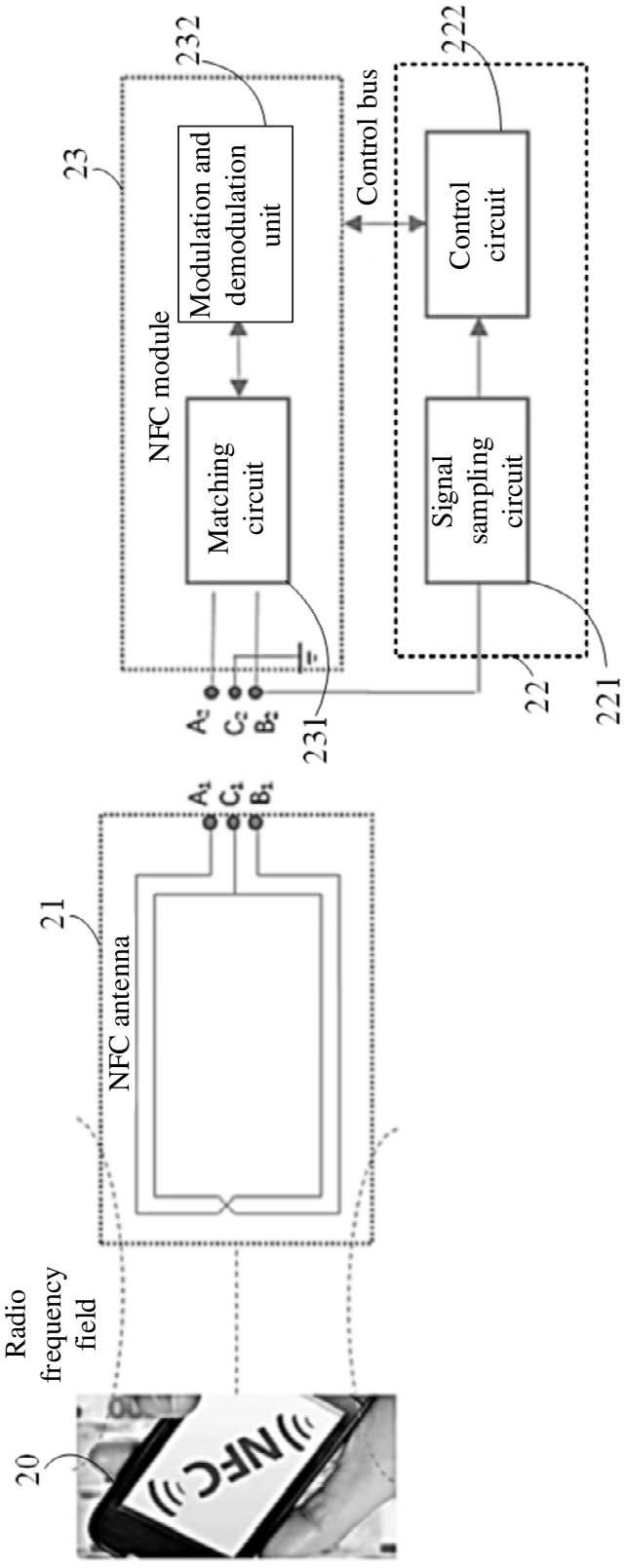
20
Radio frequency field
21
NFC antenna
A1
C1
B1
23
NFC module
232
Modulation and demodulation unit
Matching circuit
A2
C2
B2
231
Control bus
222
Control circuit
Signal sampling circuit
22
221

FIG. 2

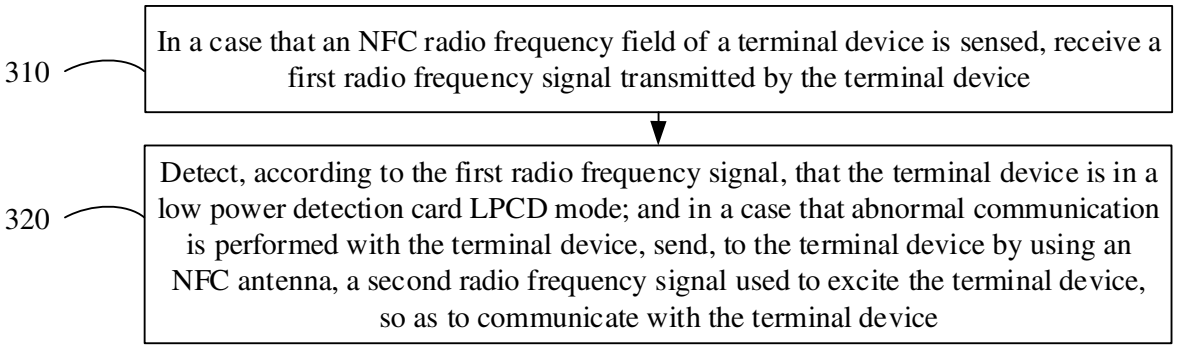
310
In a case that an NFC radio frequency field of a terminal device is sensed, receive a first radio frequency signal transmitted by the terminal device
320
Detect, according to the first radio frequency signal, that the terminal device is in a low power detection card LPCD mode; and in a case that abnormal communication is performed with the terminal device, send, to the terminal device by using an NFC antenna, a second radio frequency signal used to excite the terminal device, so as to communicate with the terminal device

FIG. 3