(12) INTERNATIONAL APPLICATION PUBLISHED UNDER THE PATENT COOPERATION TREATY (PCT)

(19) World Intellectual Property Organization
International Bureau

(43) International Publication Date
26 February 2009 (26.02.2009)

PCT

(10) International Publication Number
WO 2009/023970 A1

(51) International Patent Classification:
F21L 4/02 (2006.01) *F21V 29/00* (2006.01)
F21S 8/00 (2006.01) *F21V 5/04* (2006.01)
F21V 13/04 (2006.01) *F21V 7/00* (2006.01)
F21V 21/36 (2006.01) *F41G 3/00* (2006.01)

(21) International Application Number:
PCT/CA2008/001502

(22) International Filing Date: 22 August 2008 (22.08.2008)

(25) Filing Language: English

(26) Publication Language: English

(30) Priority Data:
60/957,285 22 August 2007 (22.08.2007) US

(71) Applicant *(for all designated States except US)*: **QUANTUM LEAP RESEARCH INC.** [CA/CA]; Boul. 237 Hymus, Pointe-Claire, Québec H9R 2C7 (CA).

(72) Inventor; and

(75) Inventor/Applicant *(for US only)*: **MILLER, Rodney, H.** [CA/CA]; 78 Summit Crescent, Westmount, Québec H3Y 1L7 (CA).

(74) Agent: **BERESKIN & PARR**; Scotia Plaza, 40 King Street West, 40th Floor, Toronto, Ontario M5H 3Y2 (CA).

(81) Designated States *(unless otherwise indicated, for every kind of national protection available)*: AE, AG, AL, AM, AO, AT, AU, AZ, BA, BB, BG, BH, BR, BW, BY, BZ, CA, CH, CN, CO, CR, CU, CZ, DE, DK, DM, DO, DZ, EC, EE, EG, ES, FI, GB, GD, GE, GH, GM, GT, HN, HR, HU, ID, IL, IN, IS, JP, KE, KG, KM, KN, KP, KR, KZ, LA, LC, LK, LR, LS, LT, LU, LY, MA, MD, ME, MG, MK, MN, MW, MX, MY, MZ, NA, NG, NI, NO, NZ, OM, PG, PH, PL, PT, RO, RS, RU, SC, SD, SE, SG, SK, SL, SM, ST, SV, SY, TJ, TM, TN, TR, TT, TZ, UA, UG, US, UZ, VC, VN, ZA, ZM, ZW.

(84) Designated States *(unless otherwise indicated, for every kind of regional protection available)*: ARIPO (BW, GH, GM, KE, LS, MW, MZ, NA, SD, SL, SZ, TZ, UG, ZM, ZW), Eurasian (AM, AZ, BY, KG, KZ, MD, RU, TJ, TM), European (AT, BE, BG, CH, CY, CZ, DE, DK, EE, ES, FI, FR, GB, GR, HR, HU, IE, IS, IT, LT, LU, LV, MC, MT, NL,

[Continued on next page]

(54) Title: LIGHTING ASSEMBLY FEATURING A PLURALITY OF LIGHT SOURCES WITH A WINDAGE AND ELEVATION CONTROL MECHANISM THEREFOR

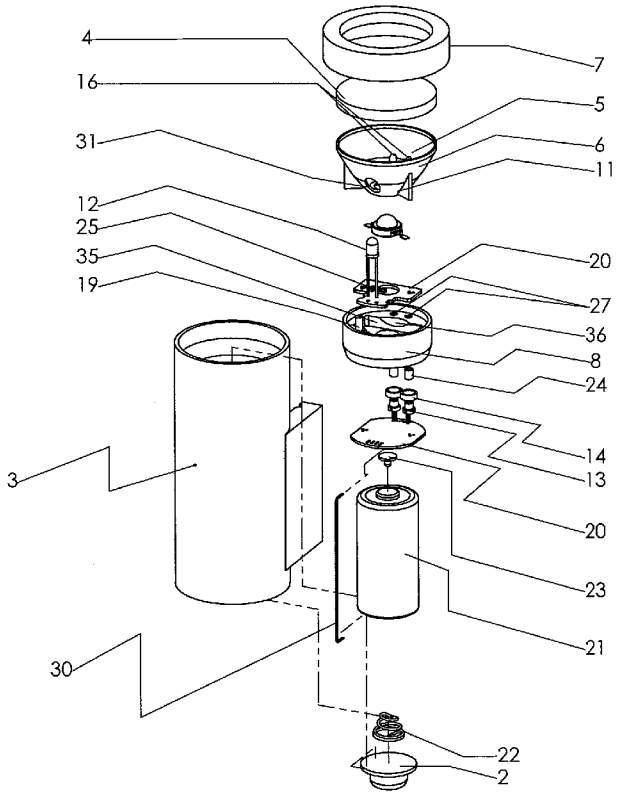

FIGURE 2

(57) Abstract: The present invention relates to a lighting assembly having a principal light source, at least one secondary light source, and a focusing element adapted to focus light emanating from the principal light source and adapted to let light emanating from the at least one secondary light source pass through the focusing element. The invention also relates to a windage and elevation control mechanism having a longitudinal and lateral mobile unit and a receiving unit. The mobile unit is adapted to receive a device to be adjusted, and has two aligned protrusions located respectively on longitudinal opposite sides thereof. The receiving unit defines a cavity adapted to receive the mobile unit. The cavity is defined by facing surfaces having complimentary channels adapted to receive the protrusions of the mobile unit.

WO 2009/023970 A1

NO, PL, PT, RO, SE, SI, SK, TR), OAPI (BF, BJ, CF, CG, CI, CM, GA, GN, GQ, GW, ML, MR, NE, SN, TD, TG).

Published:
— *with international search report*