Figure 1
TRANSPORT MODE

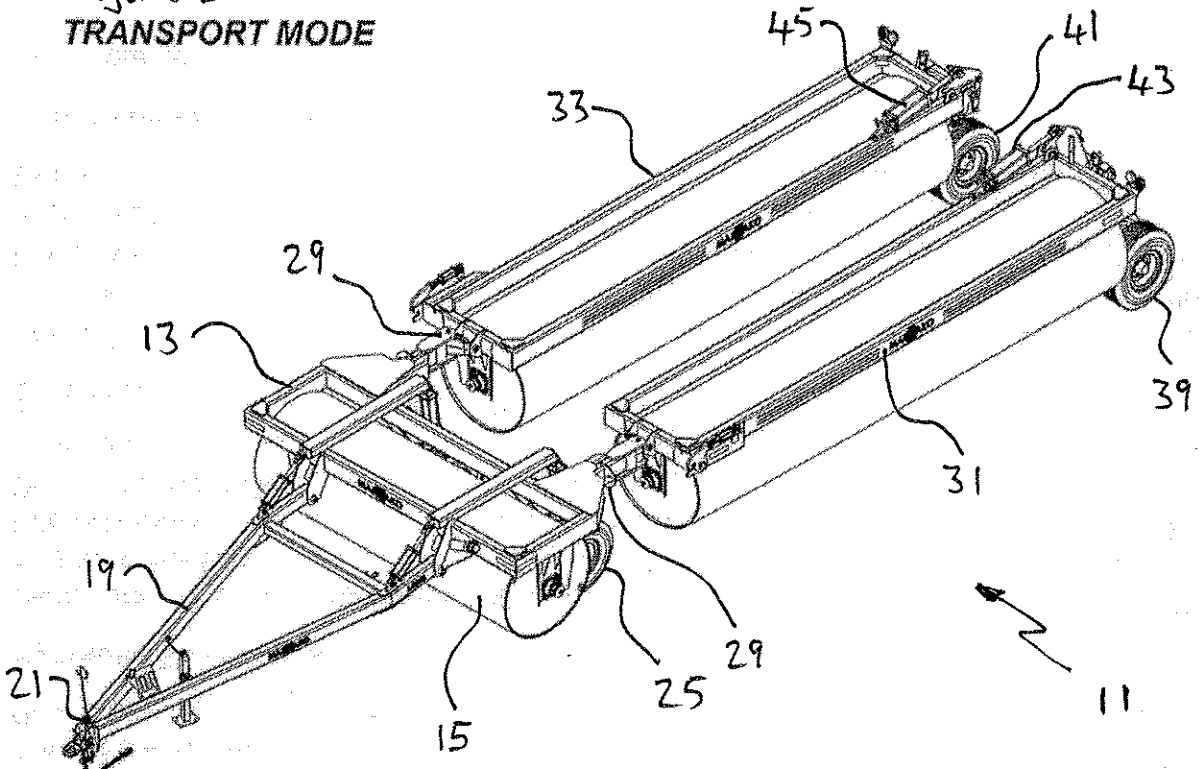

FIELD MODE

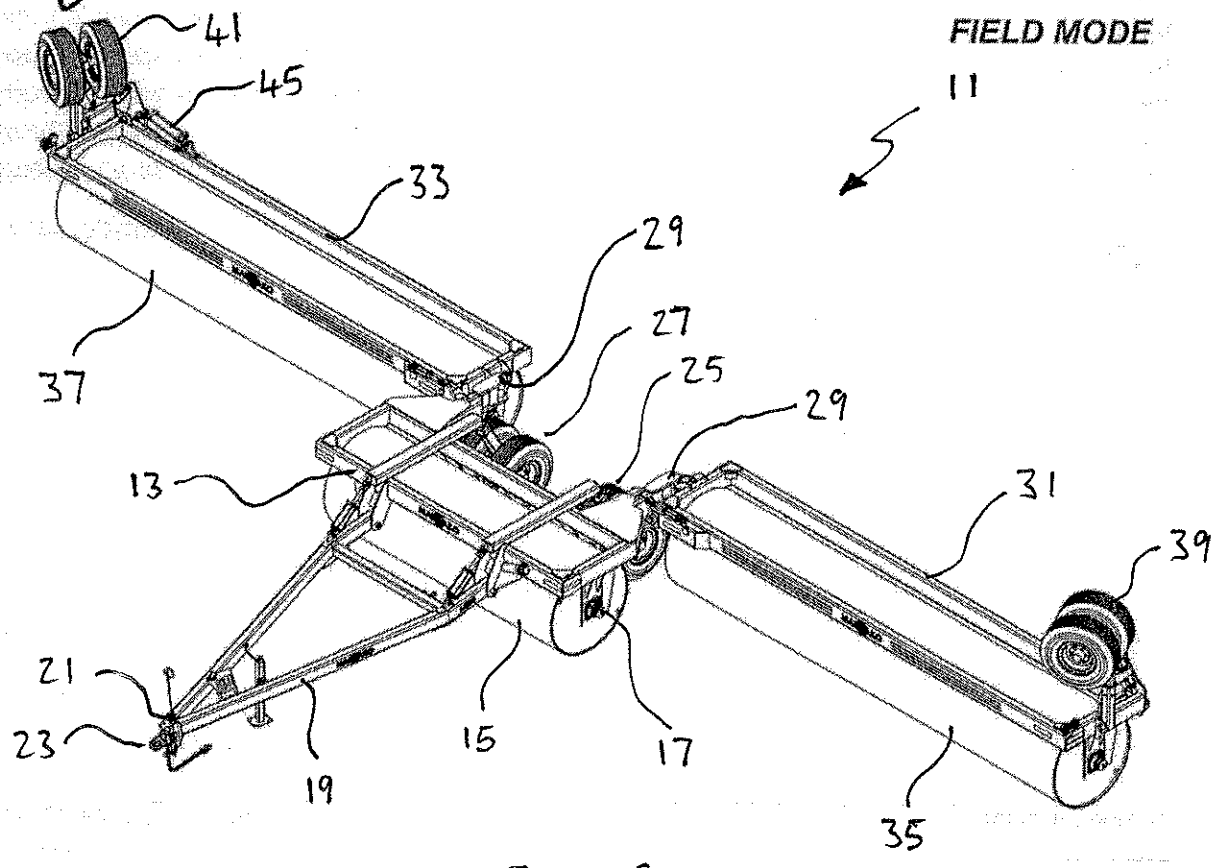

Figure 2

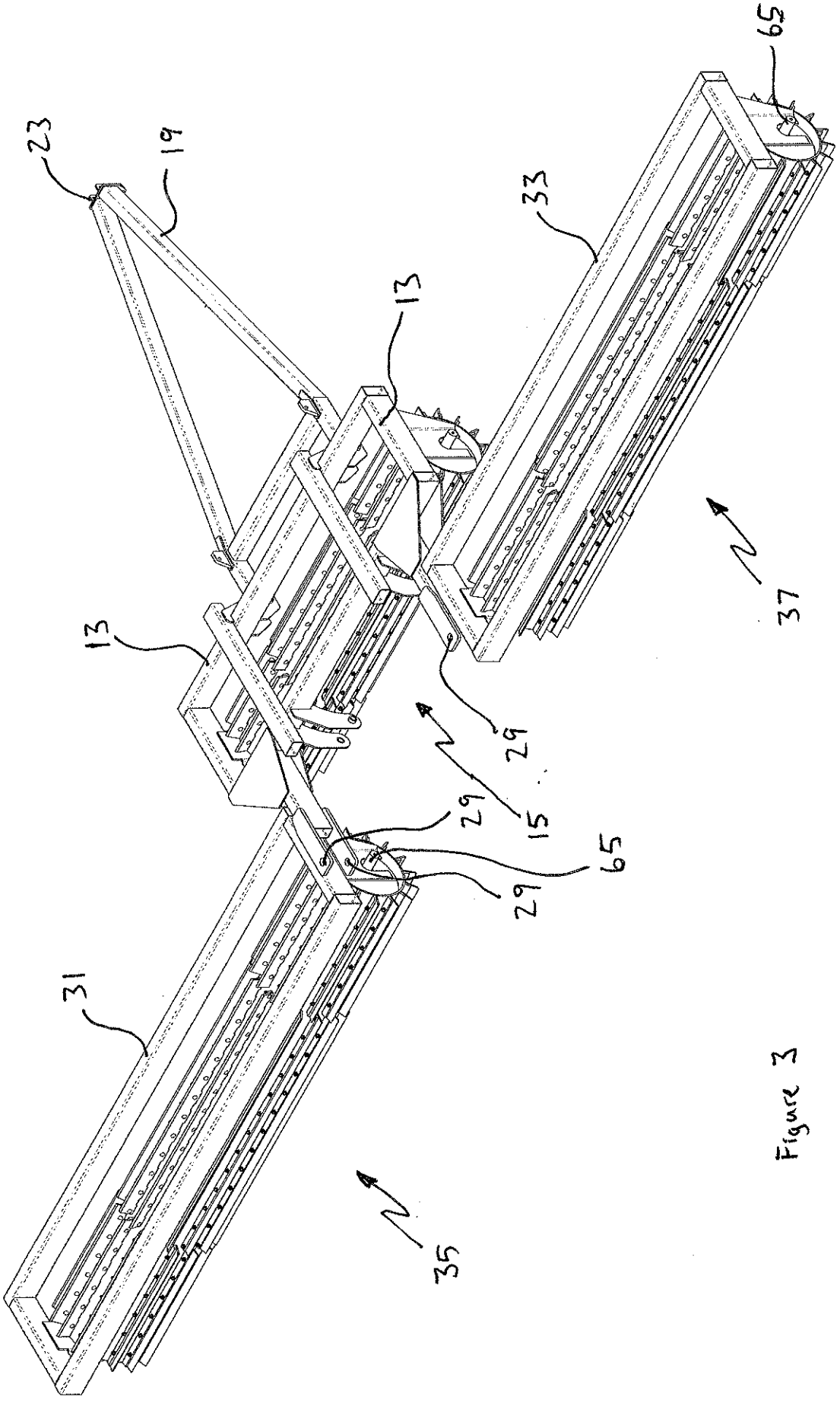

Figure 3

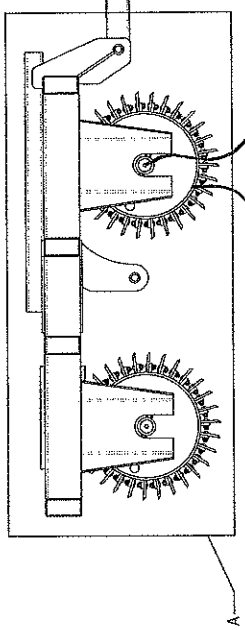

Figure 4

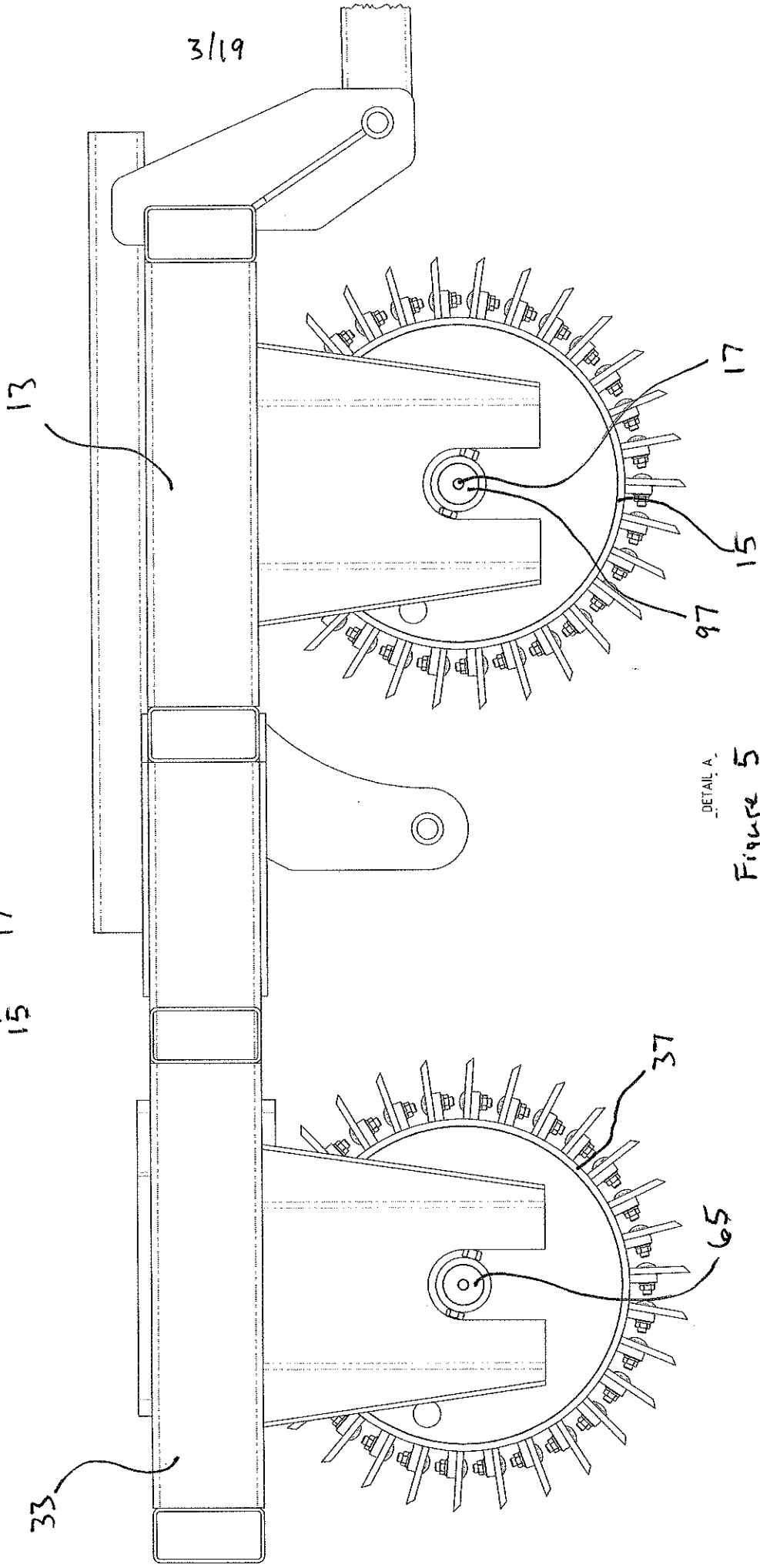

DETAIL A

Figure 5

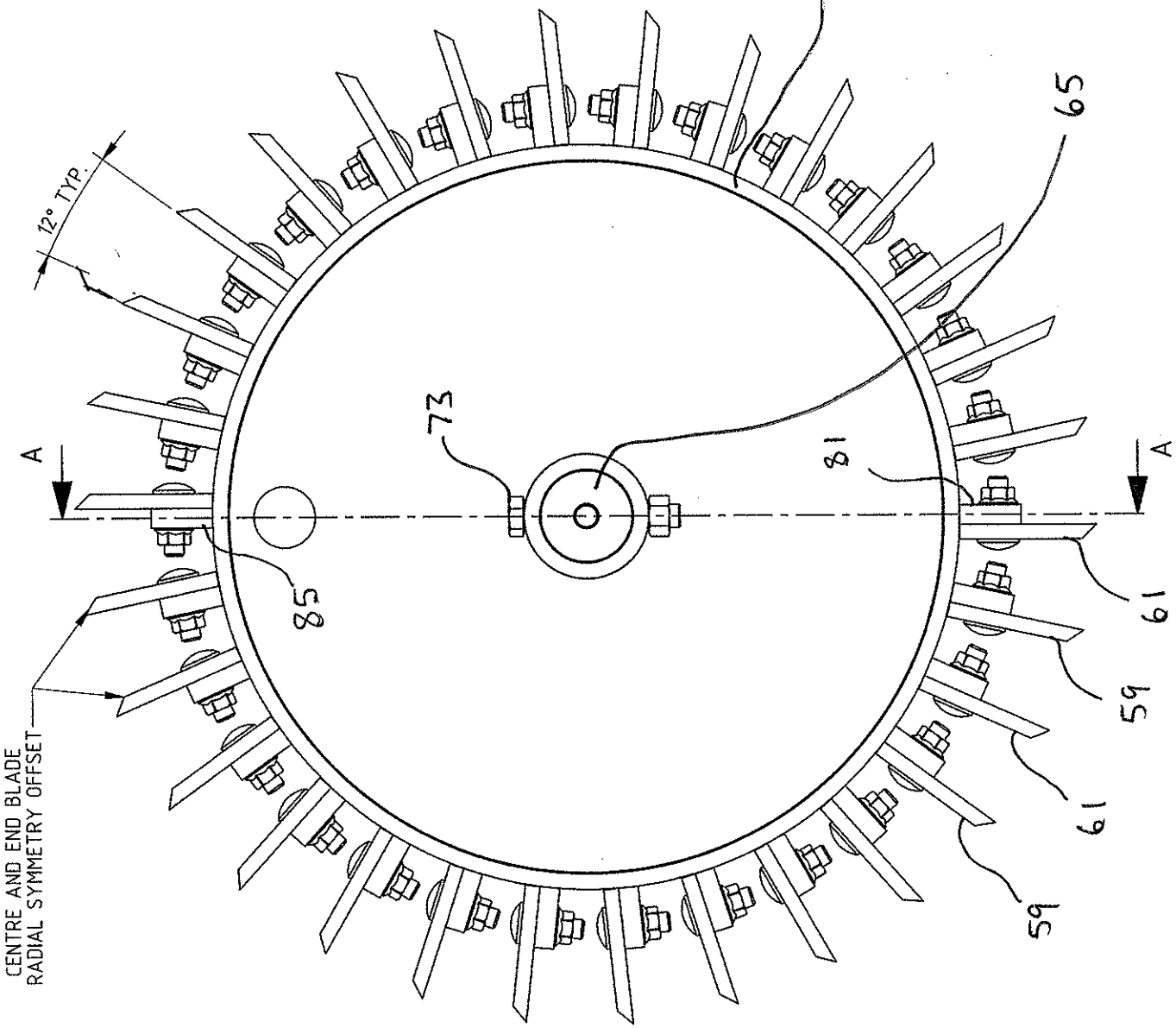
12° TYP.
A
A
47
65
73
81
85
61
59
61
59
CENTRE AND END BLADE
RADIAL SYMMETRY OFFSET

Figure 6

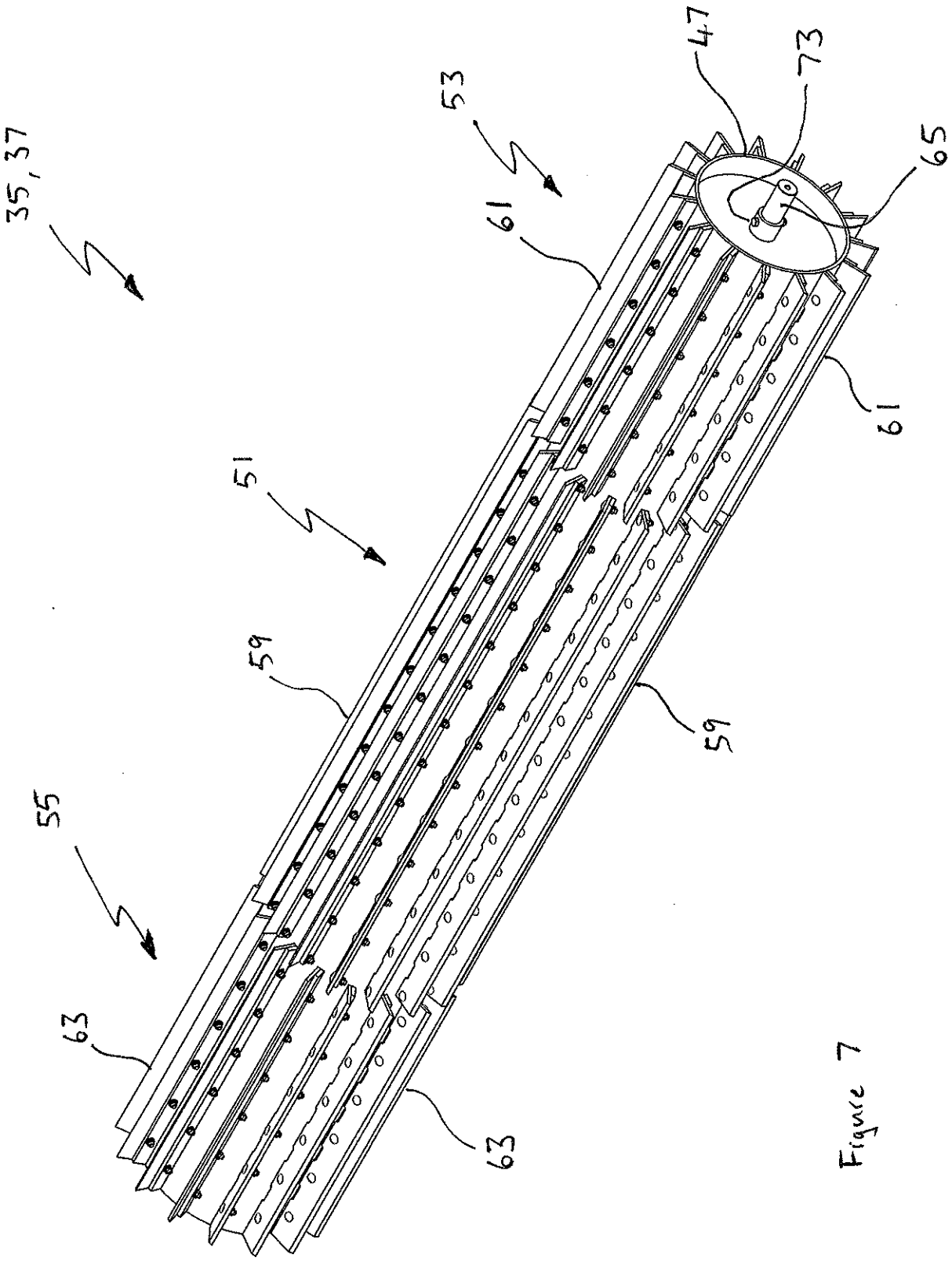

Figure 7

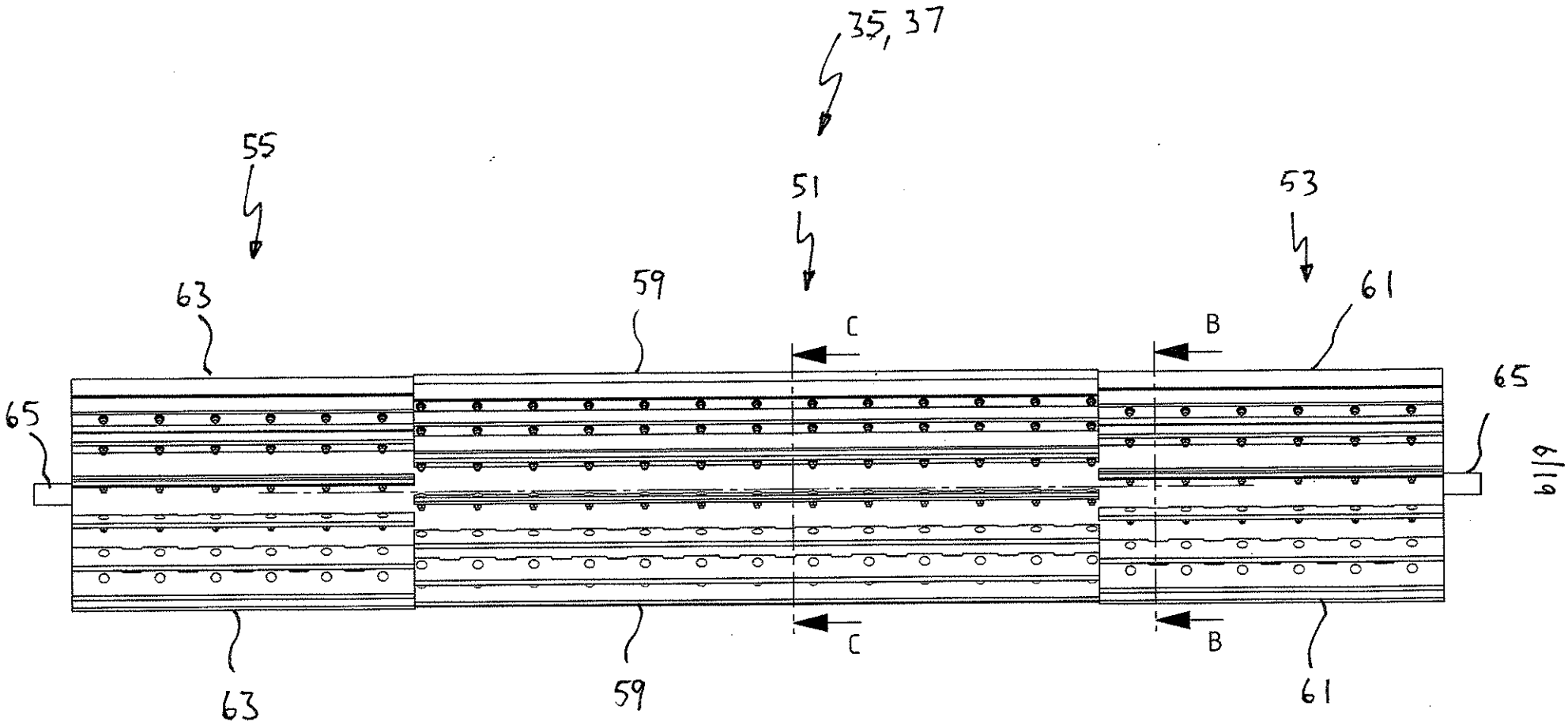

Figure 8

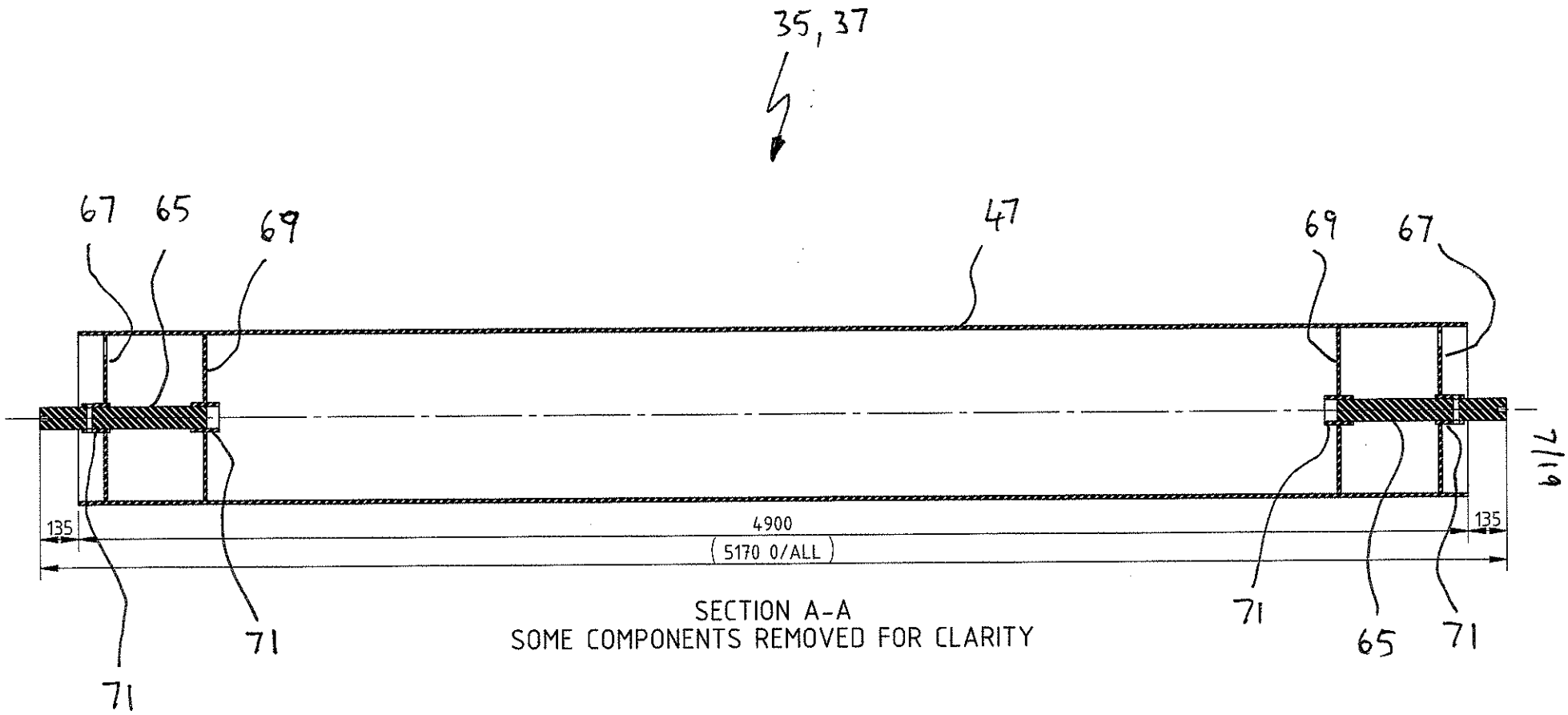
35, 37
67
65
69
47
69
67
71
135
4900
(5170 O/ALL)
135
71
71
71
65
71
SECTION A-A
SOME COMPONENTS REMOVED FOR CLARITY

Figure 9

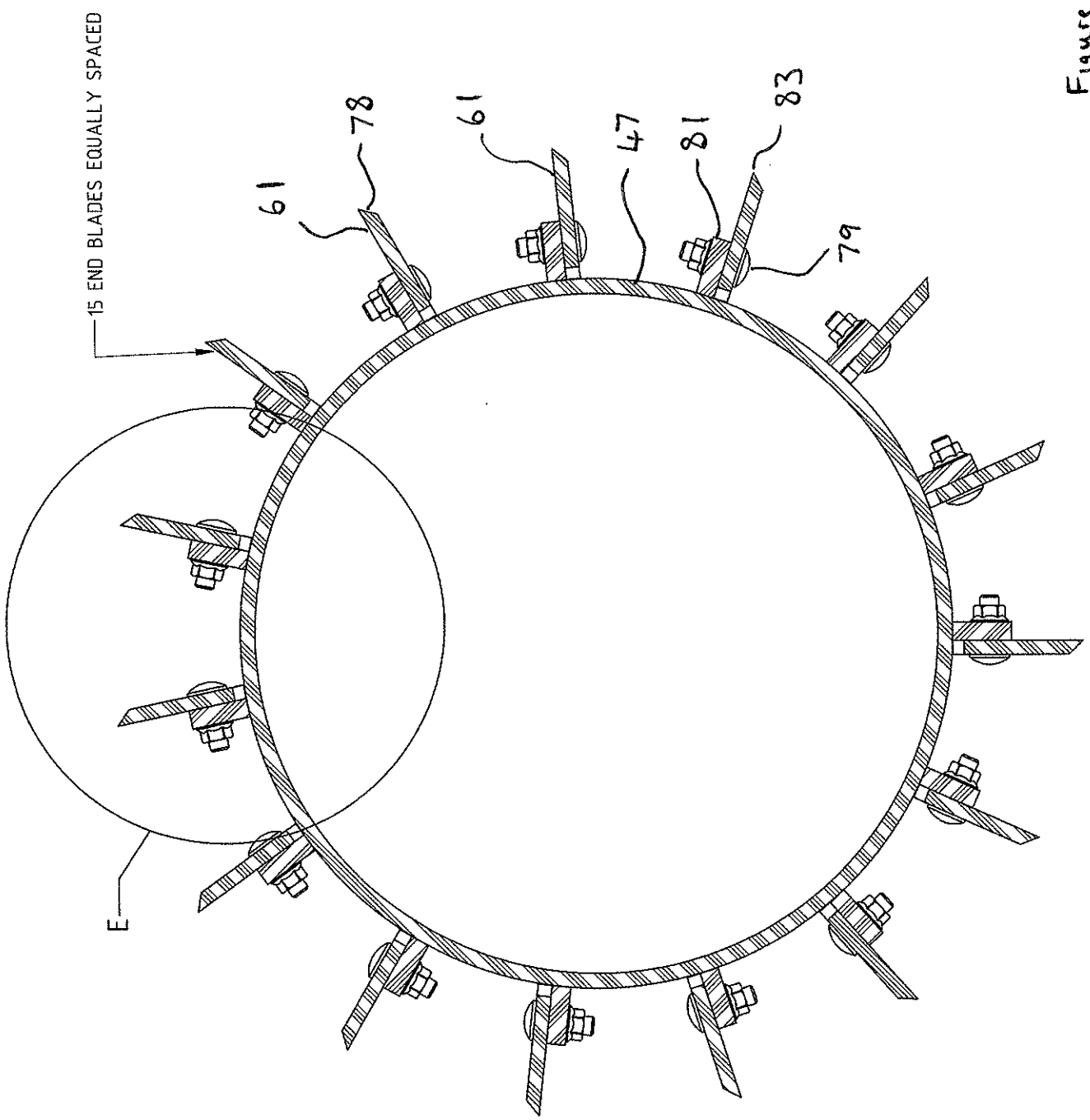

Figure 10

END BLADE ARRANGEMENT
SECTION B-B
SOME COMPONENTS REMOVED FOR CLARITY

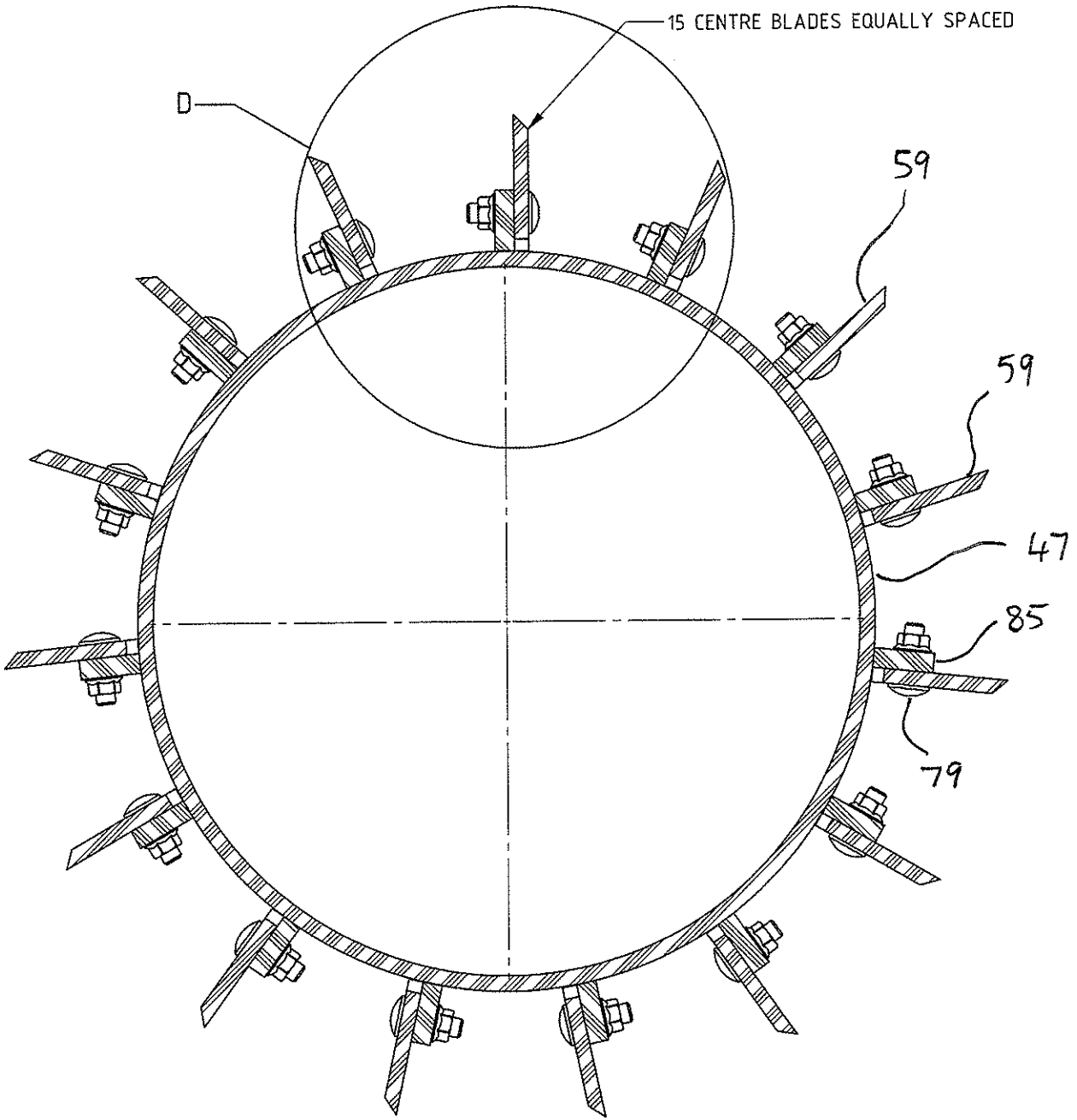

CENTRE BLADE ARANGEMENT
SECTION C-C
SOME COMPONENTS REMOVED FOR CLARITY

Figure 11

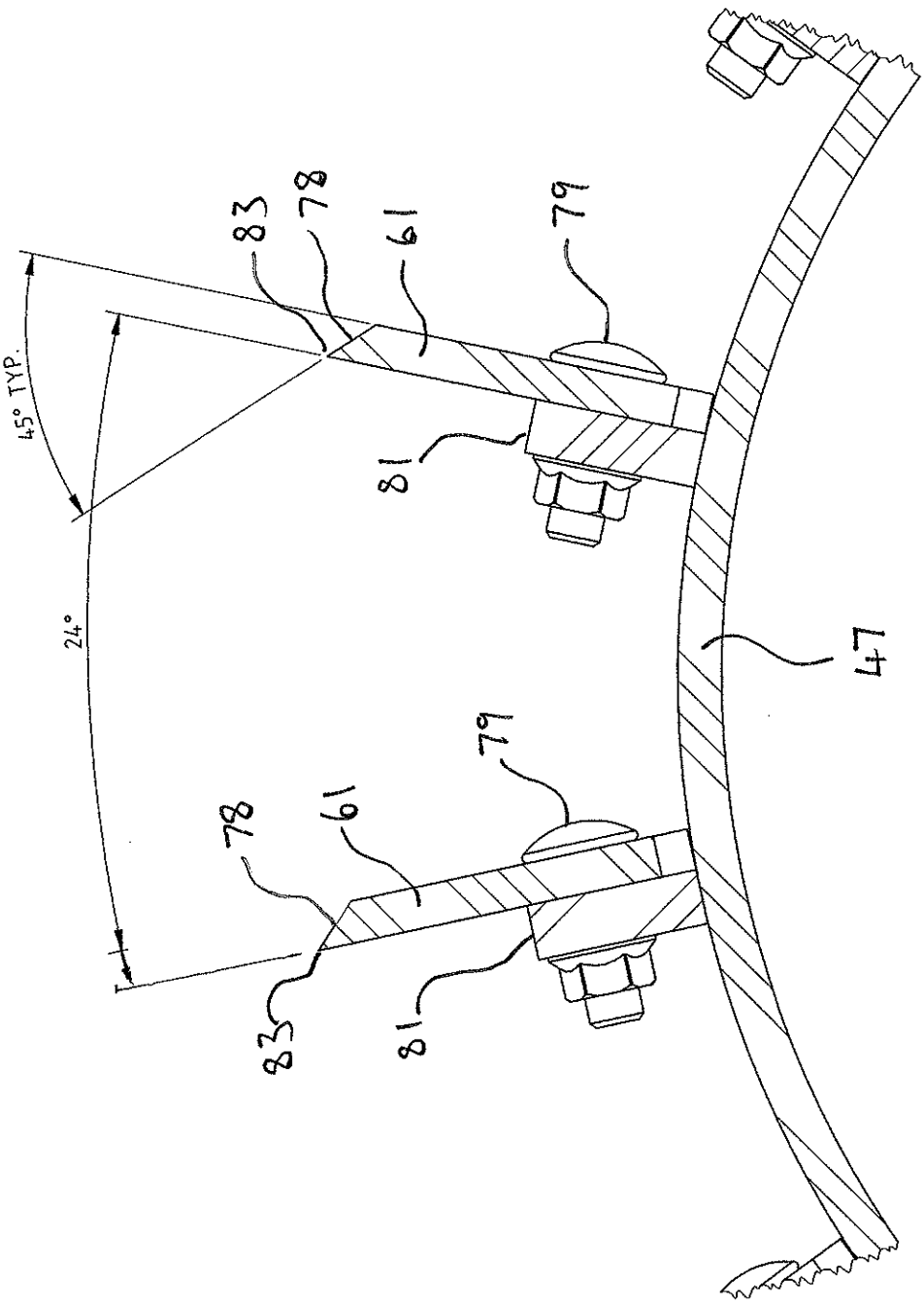

Figure 12

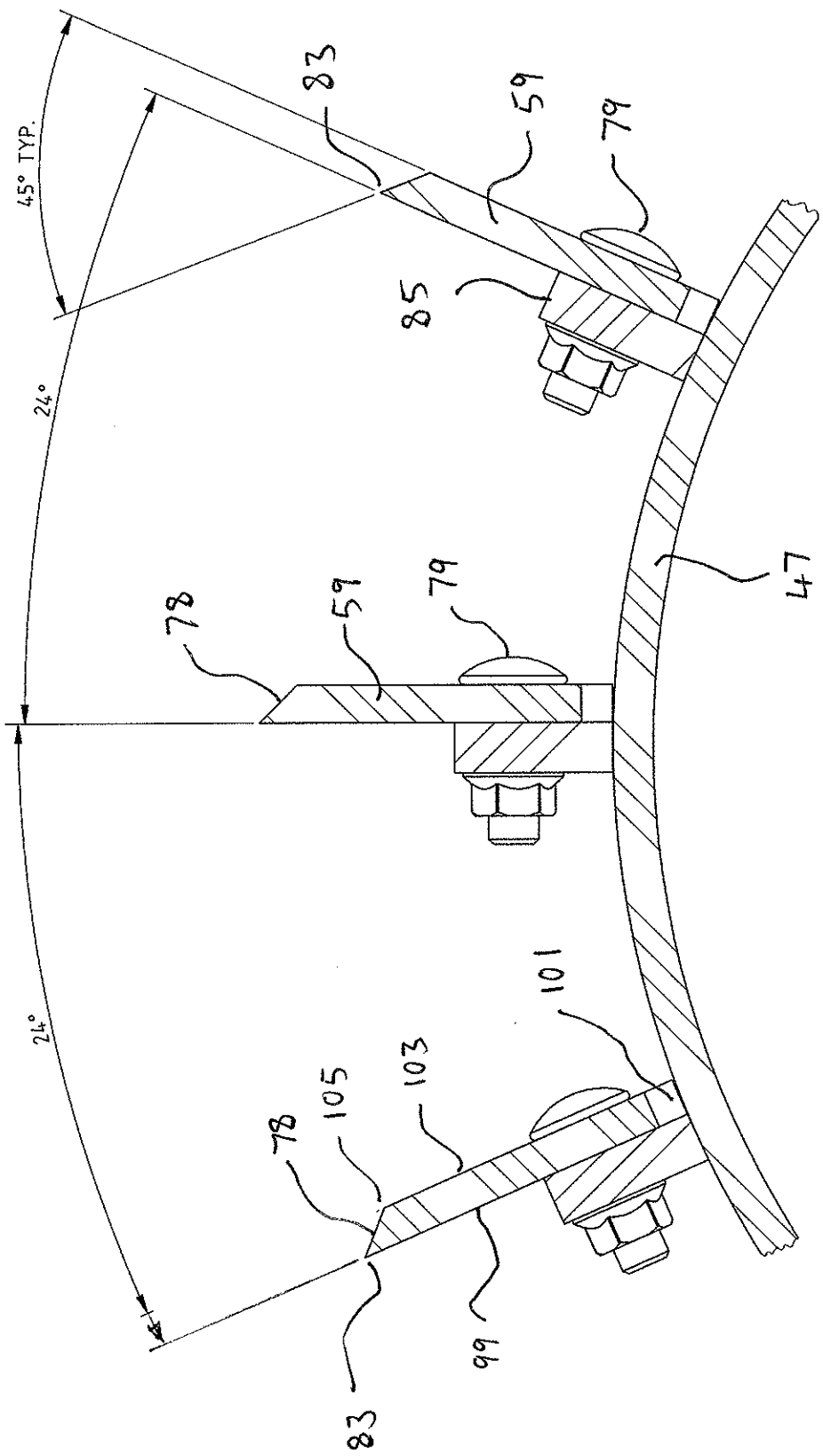

DETAIL D

Figure 13

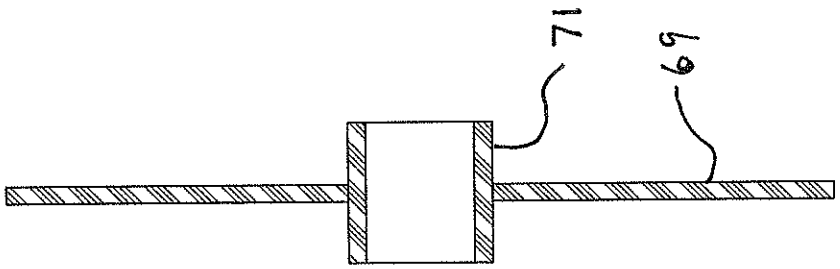

SECTION F-F

Figure 15

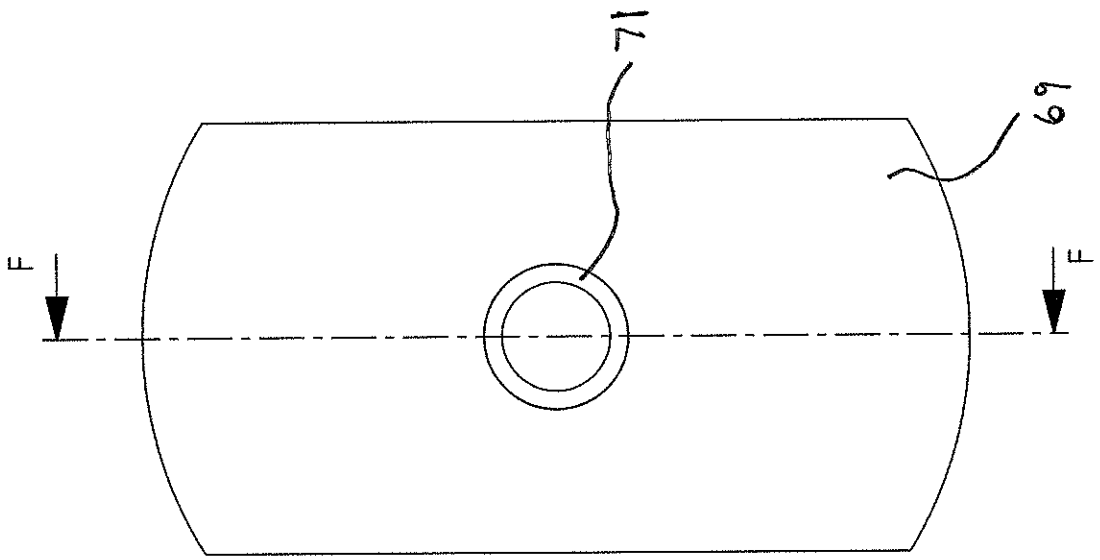

Figure 14

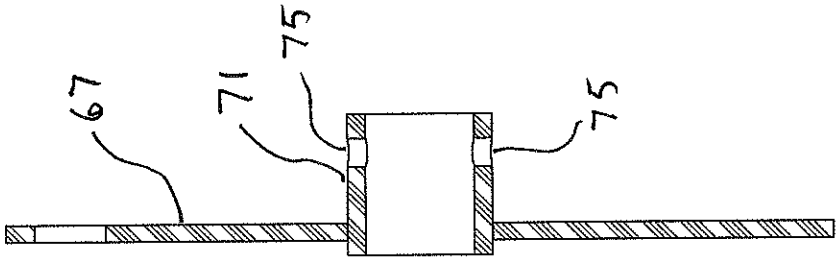

SECTION G-G

Figure 17

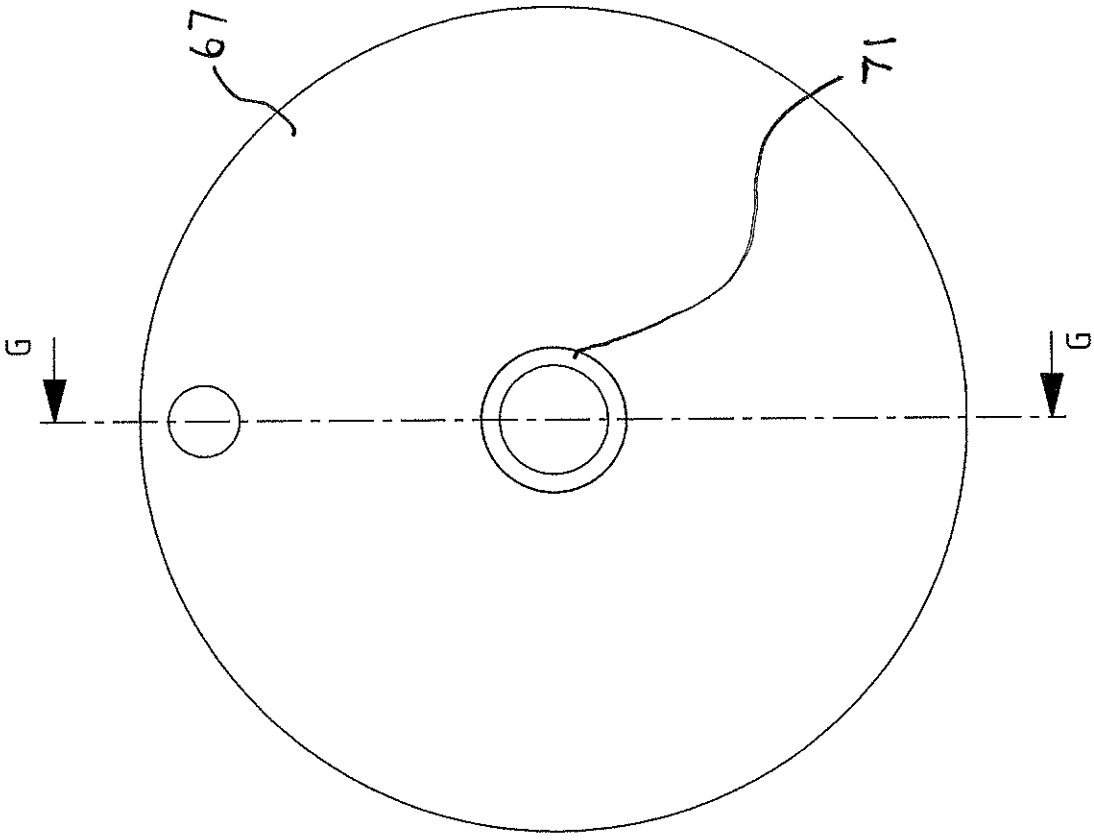

Figure 16

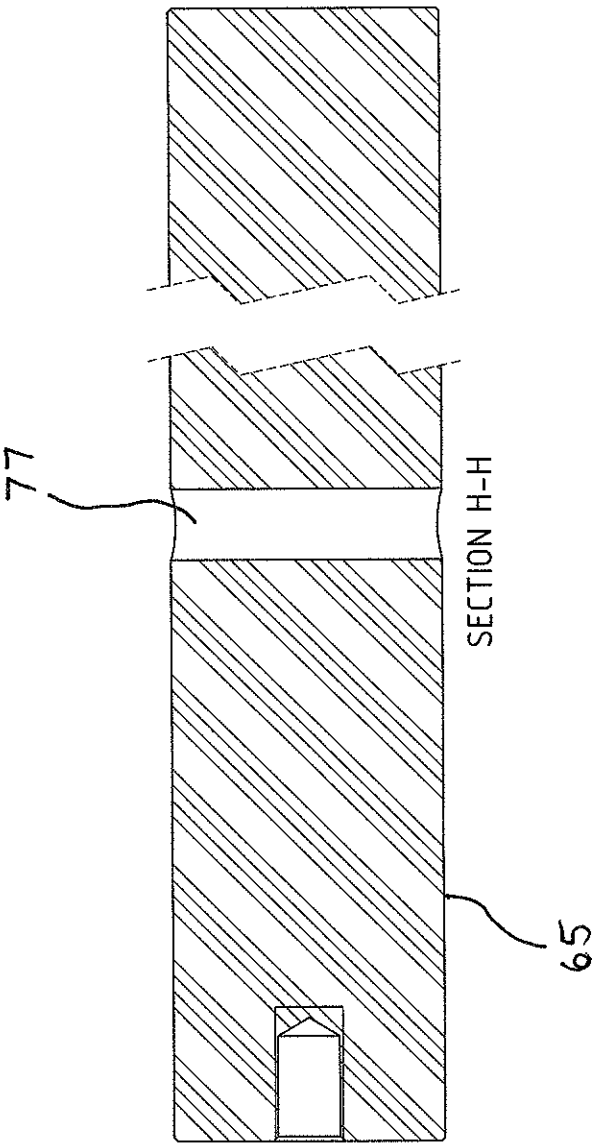

Figure 19

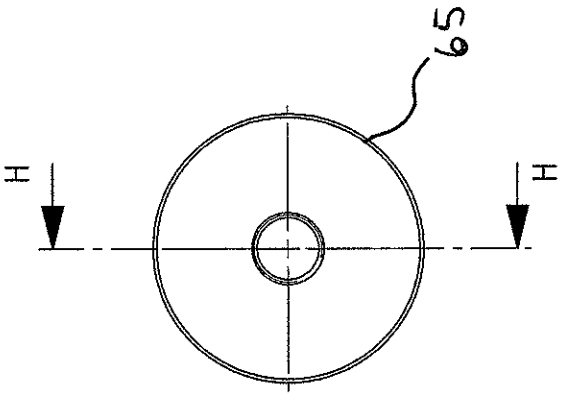

Figure 18

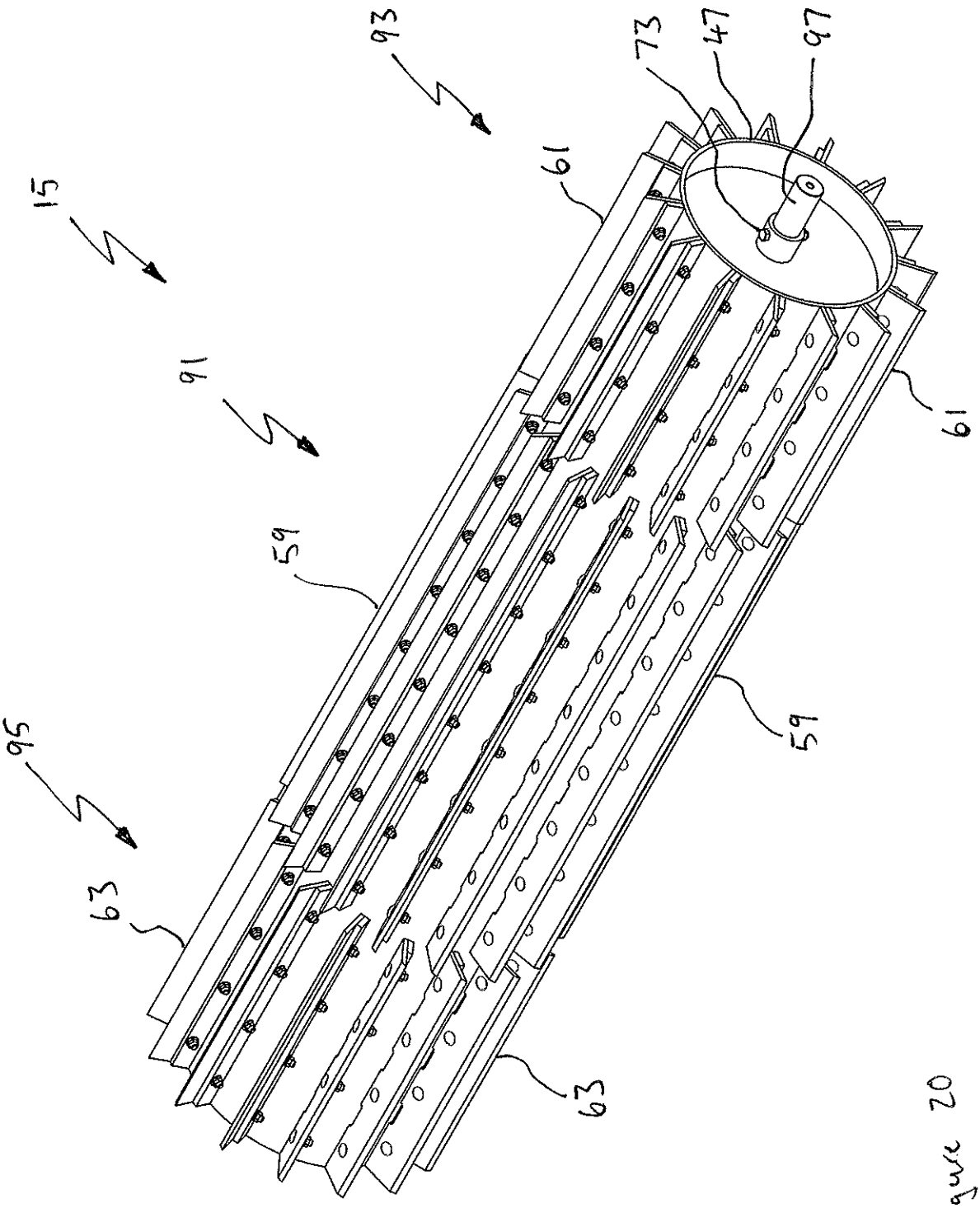

Figure 20

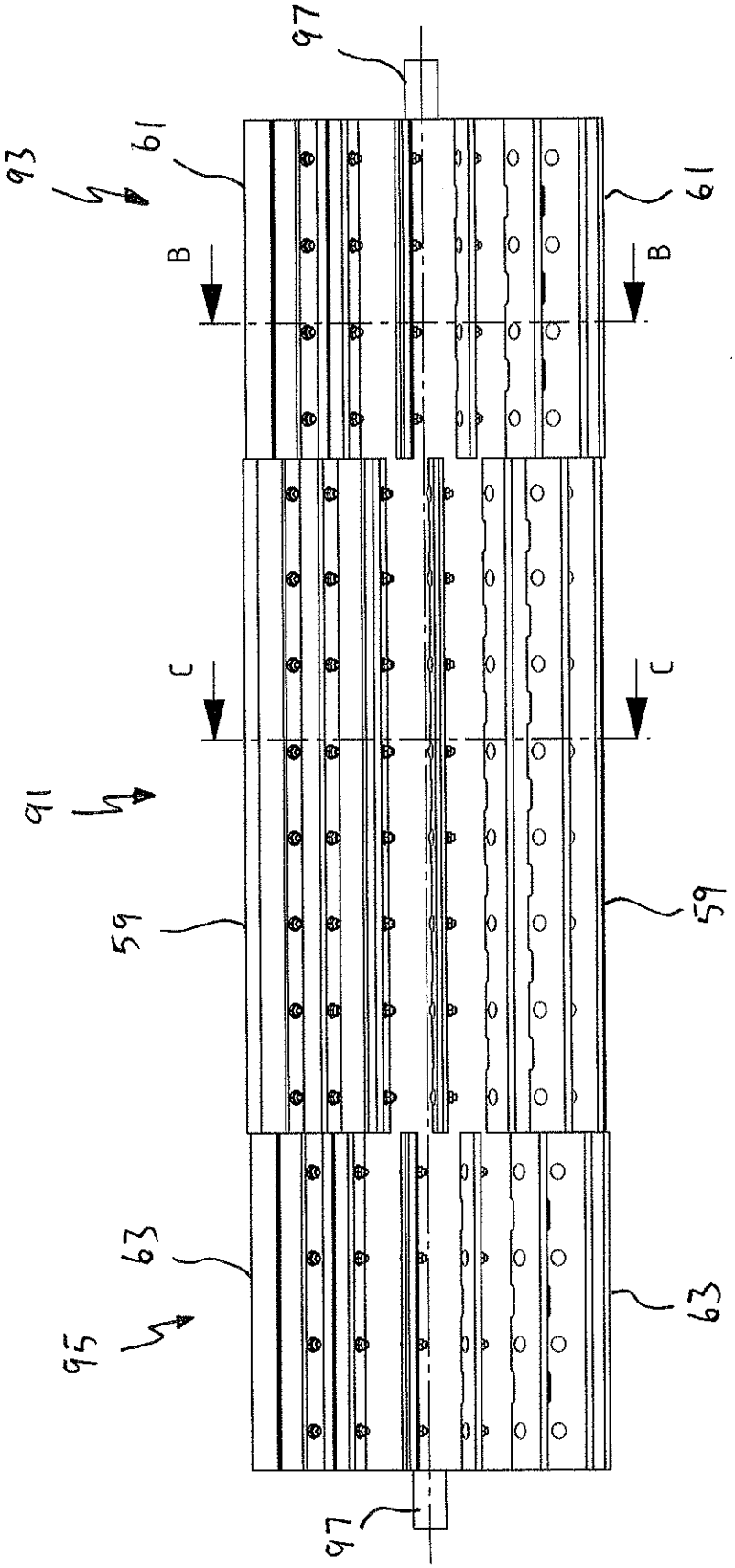

Figure 21

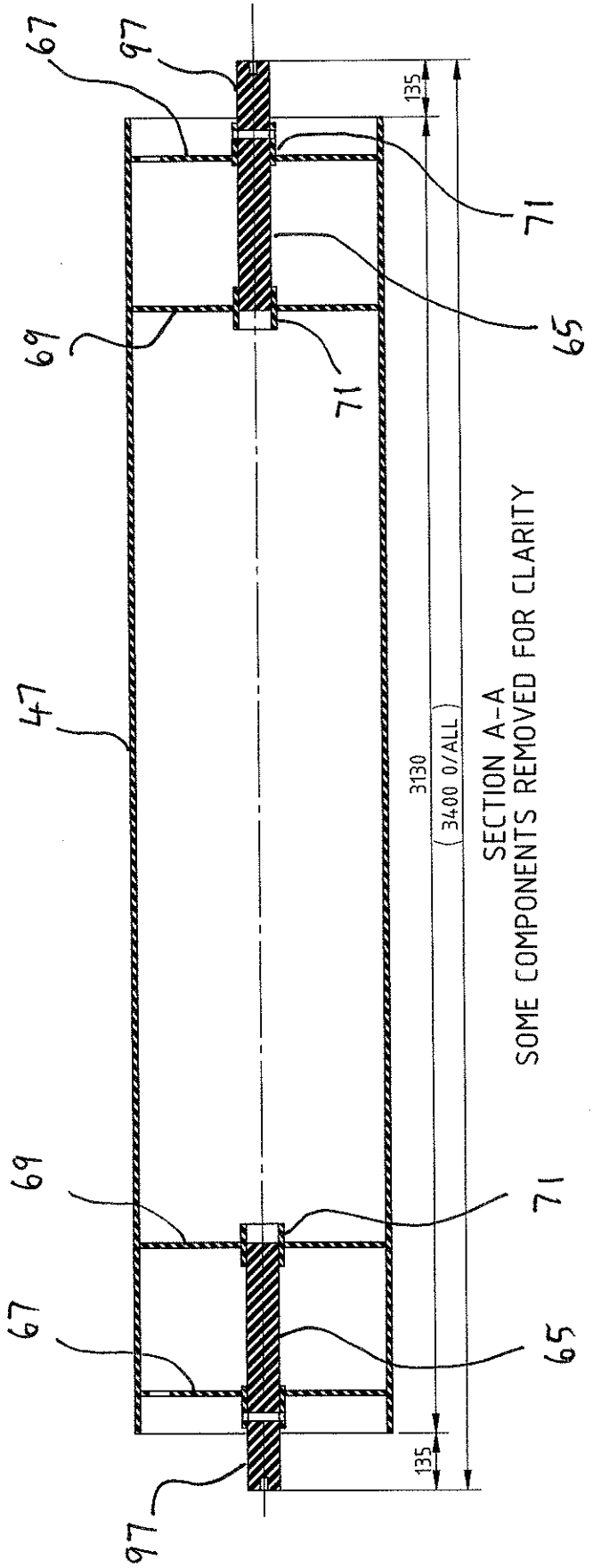
67
97
135
71
65
69
71
47
3130
(3400 O/ALL)
69
71
67
65
135
97
SECTION A-A
SOME COMPONENTS REMOVED FOR CLARITY

Figure 22

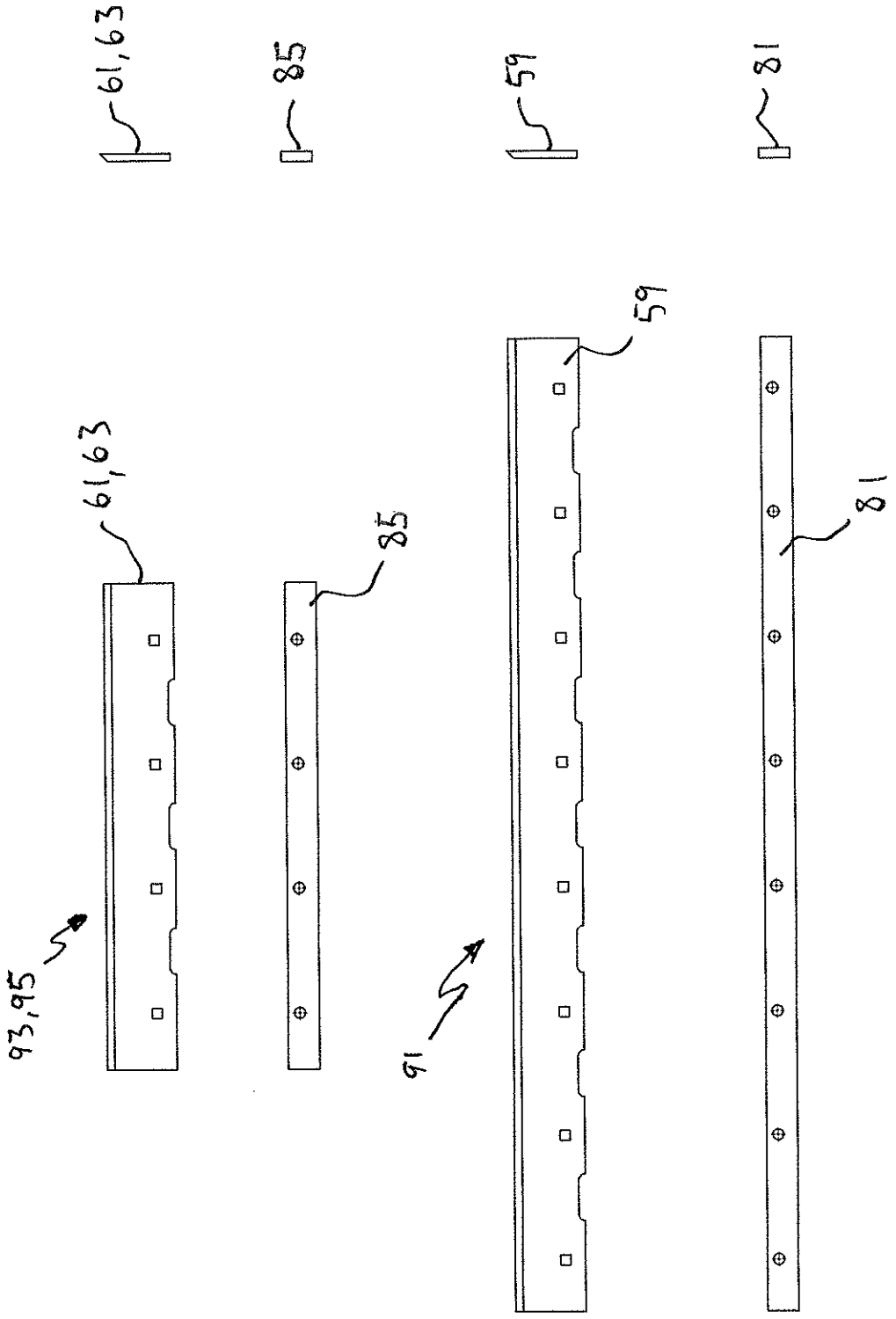

Figure 23

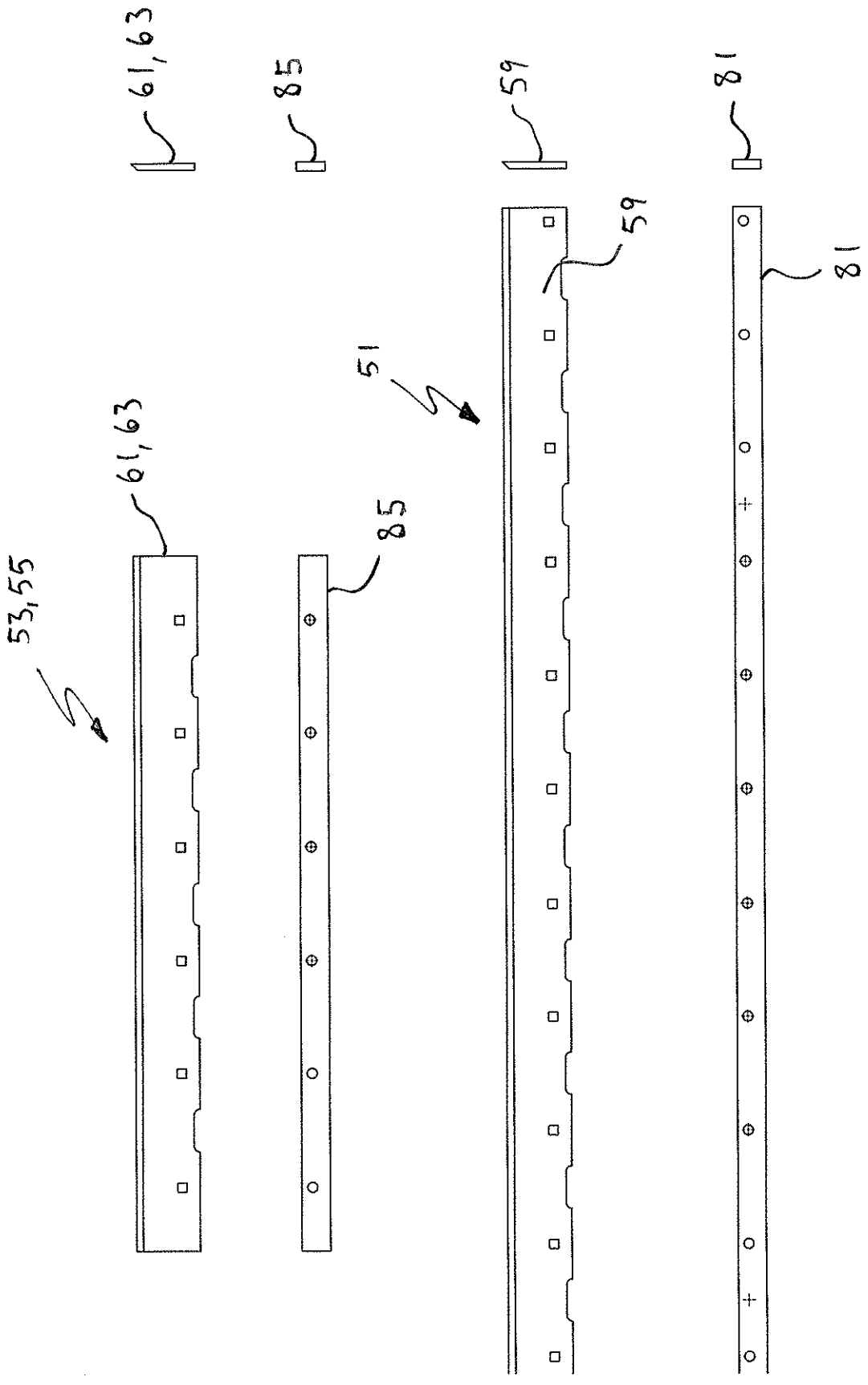

Figure 24