FIG. 1

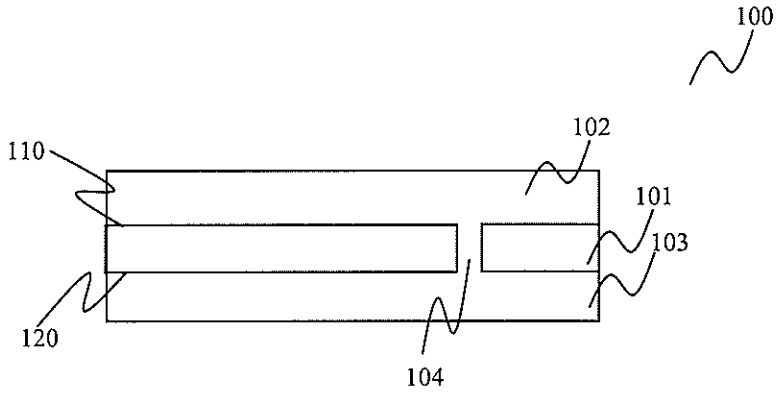
100
102
110
101
103
120
104

FIG. 2 (a)

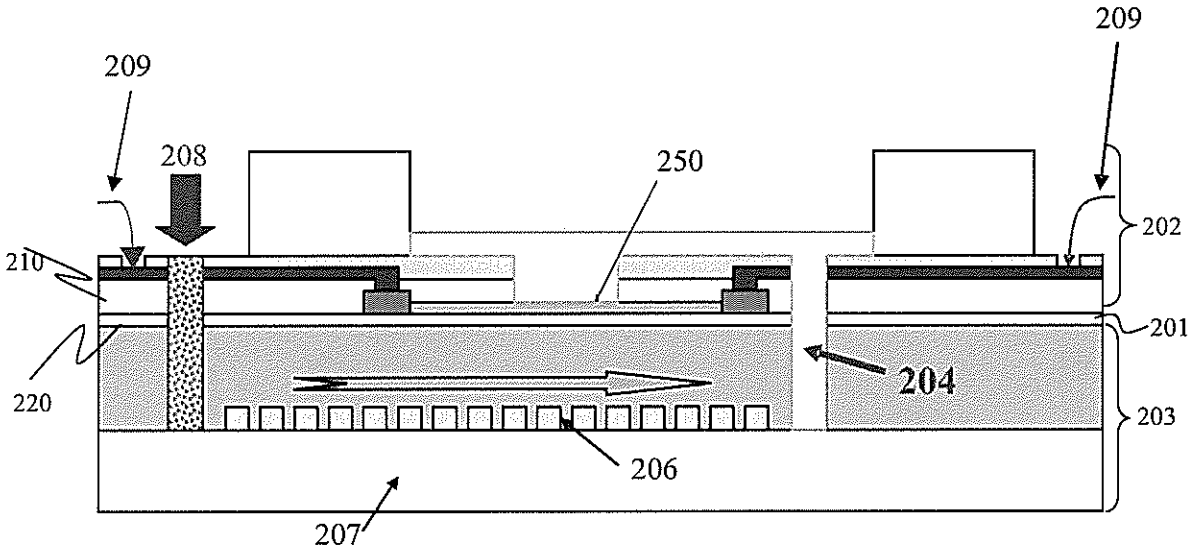
209
209
208
250
210
202
201
220
204
203
206
207

FIG. 2 (b)

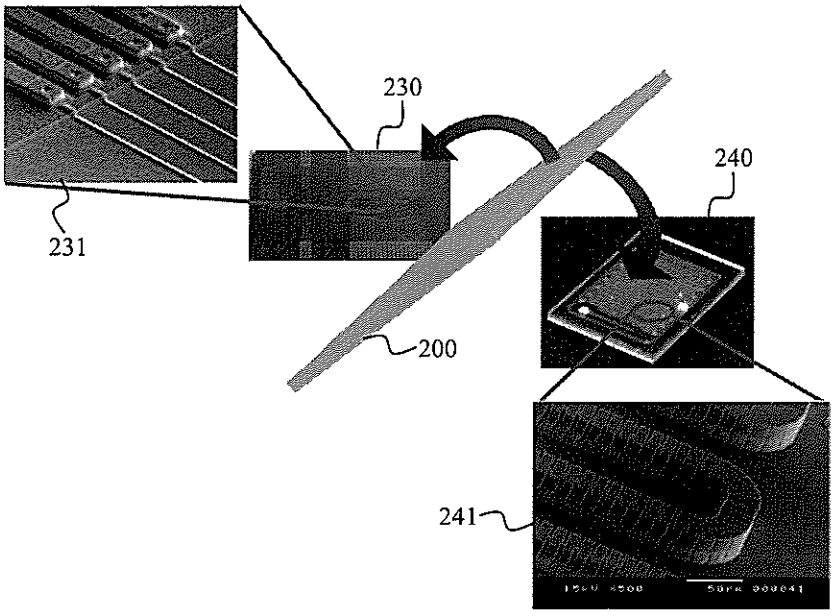

FIG. 2 (c)

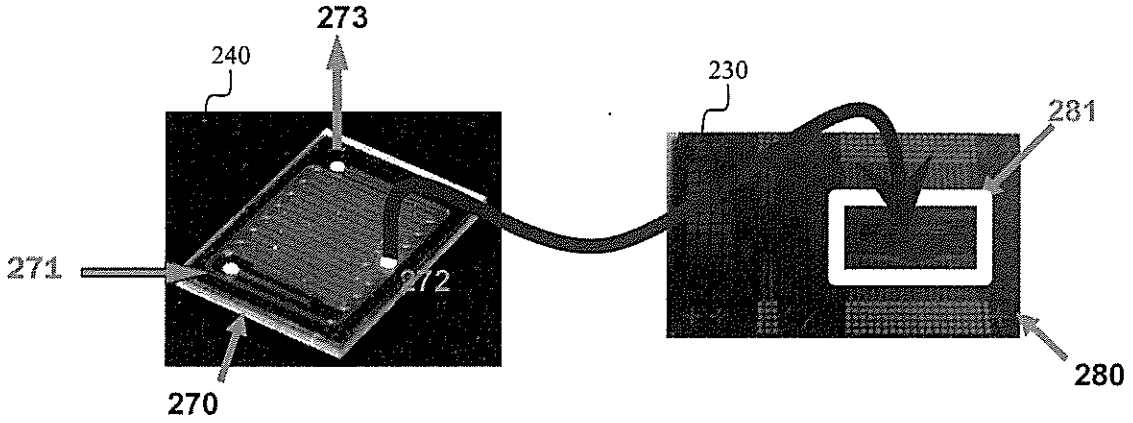

FIG. 2 (d)

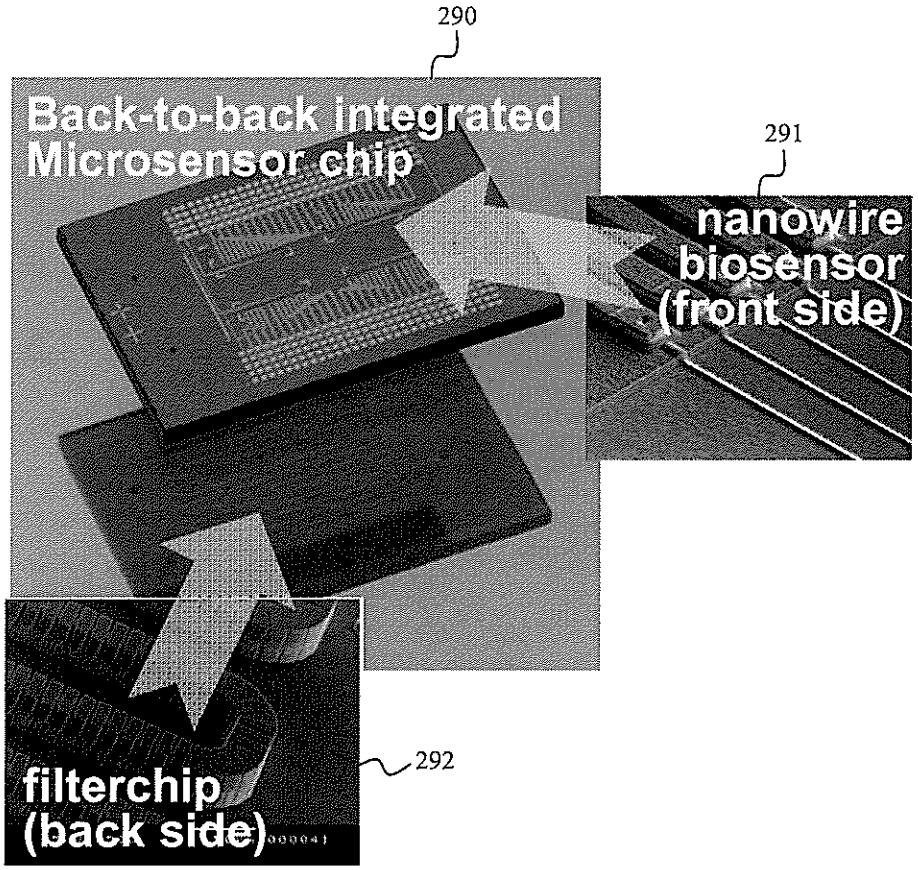
290
Back-to-back integrated
Microsensor chip
291
nanowire
biosensor
(front side)
292
filterchip
(back side)

FIG. 3

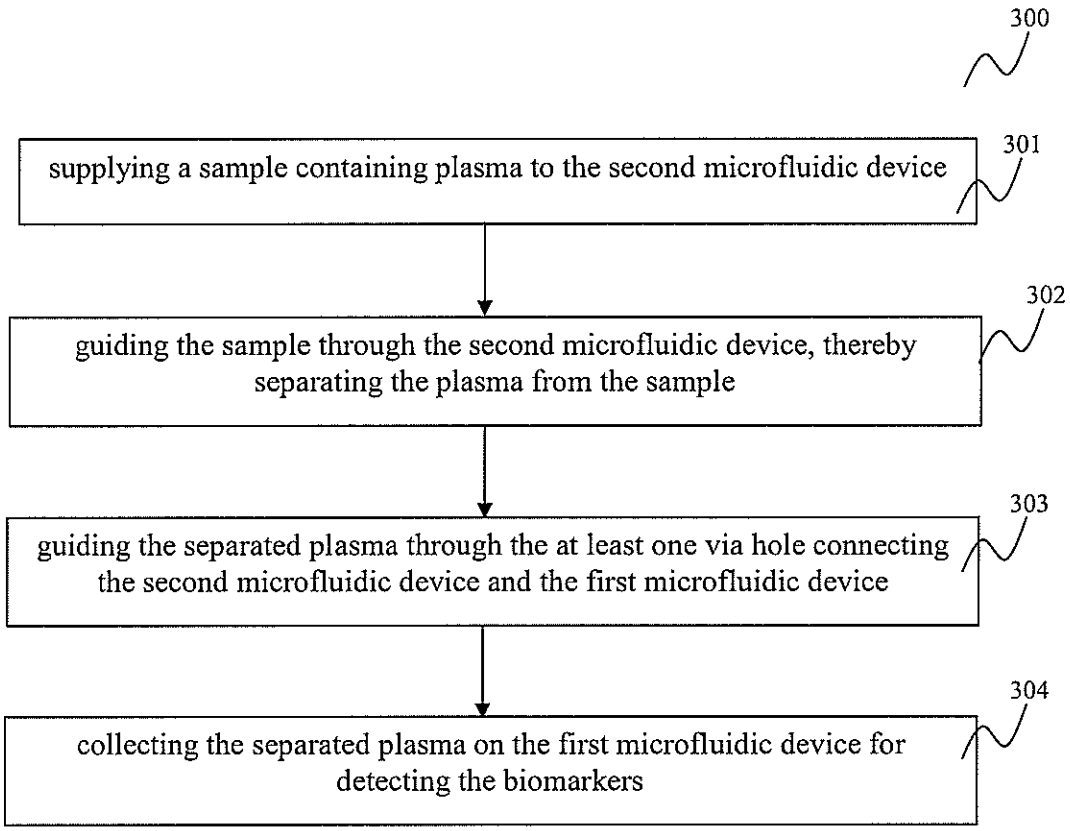
300
supplying a sample containing plasma to the second microfluidic device
301
guiding the sample through the second microfluidic device, thereby separating the plasma from the sample
302
guiding the separated plasma through the at least one via hole connecting the second microfluidic device and the first microfluidic device
303
collecting the separated plasma on the first microfluidic device for detecting the biomarkers
304

FIG. 4

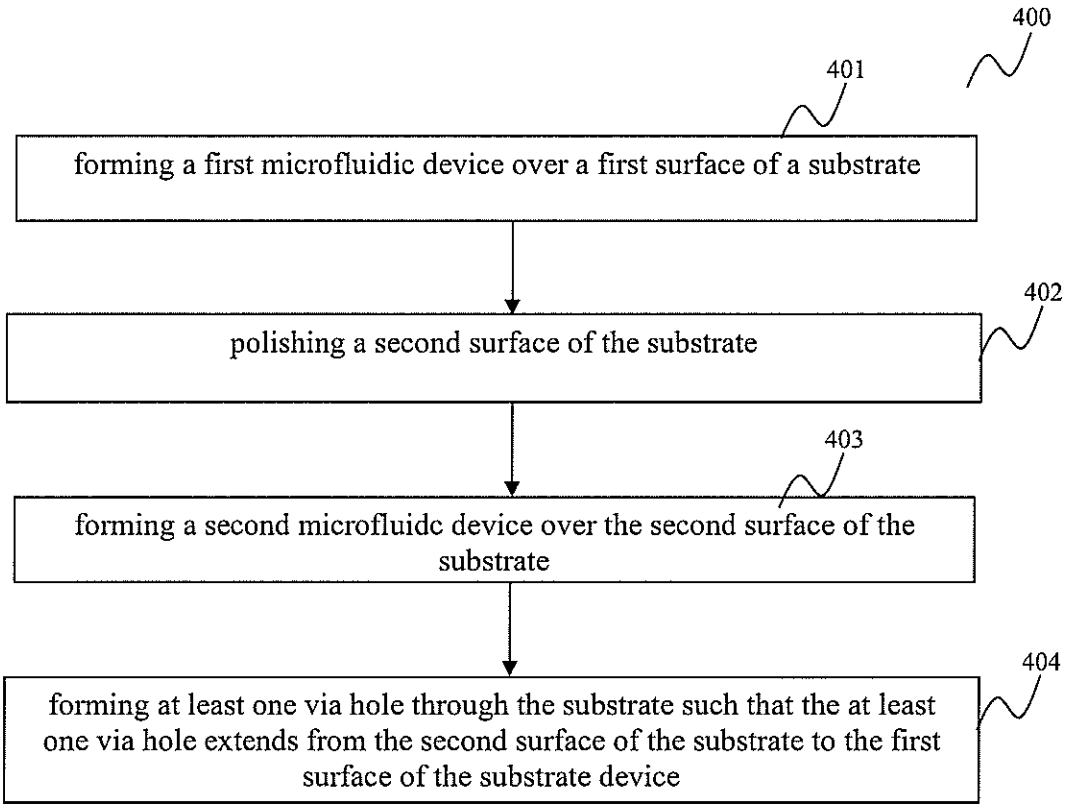
400
401
forming a first microfluidic device over a first surface of a substrate
402
polishing a second surface of the substrate
403
forming a second microfluidc device over the second surface of the substrate
404
forming at least one via hole through the substrate such that the at least one via hole extends from the second surface of the substrate to the first surface of the substrate device

FIG. 5 (a)

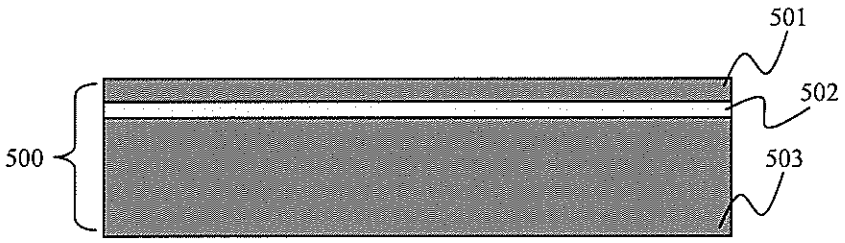

FIG. 5 (b)

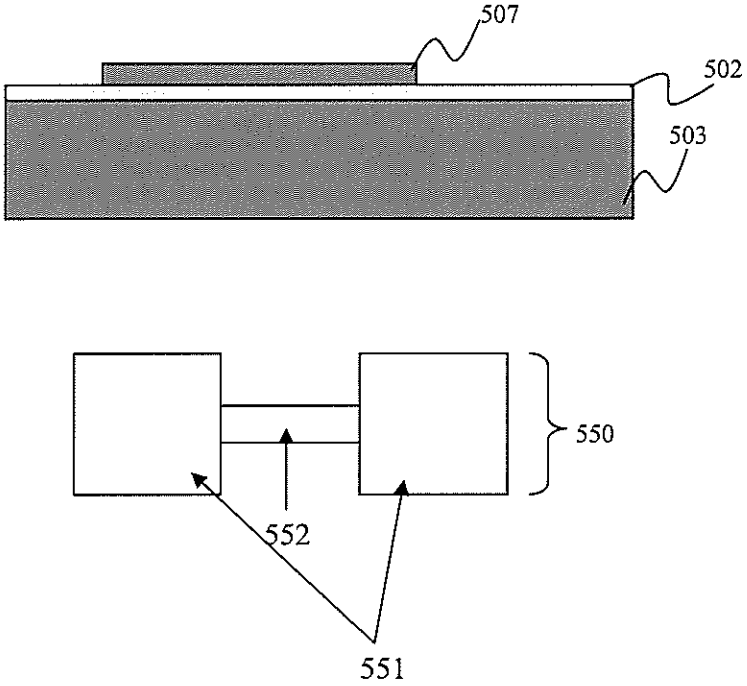

FIG. 5 (c)

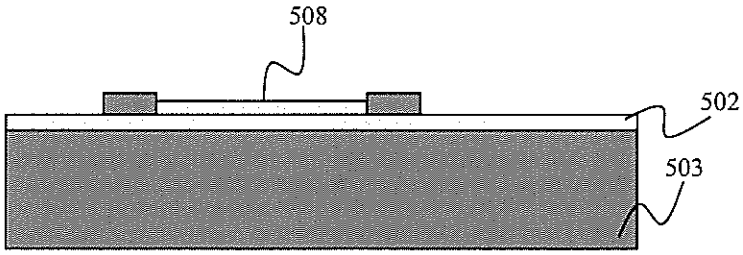

FIG. 5 (d)

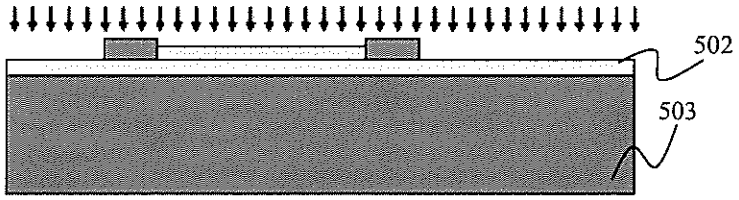

FIG. 5 (e)

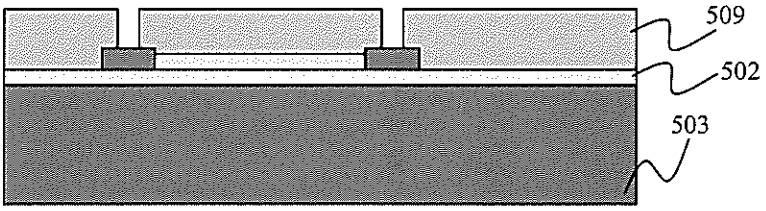

FIG. 5 (f)

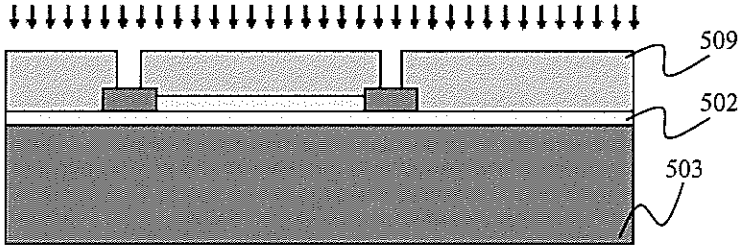

FIG. 5 (g)

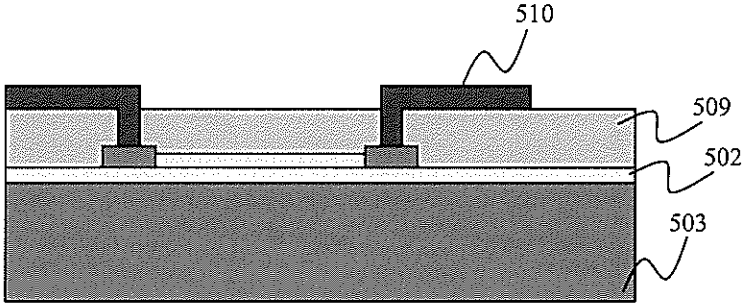

FIG. 5 (h)

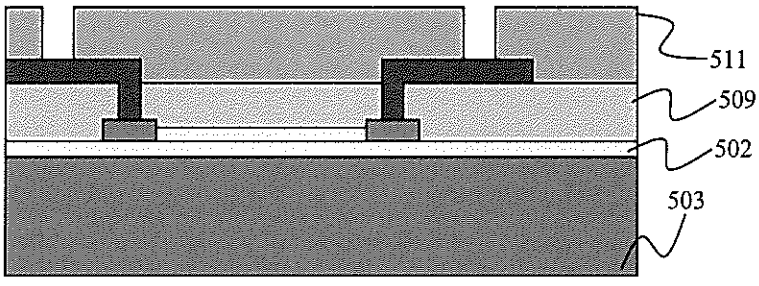

FIG. 5 (i)

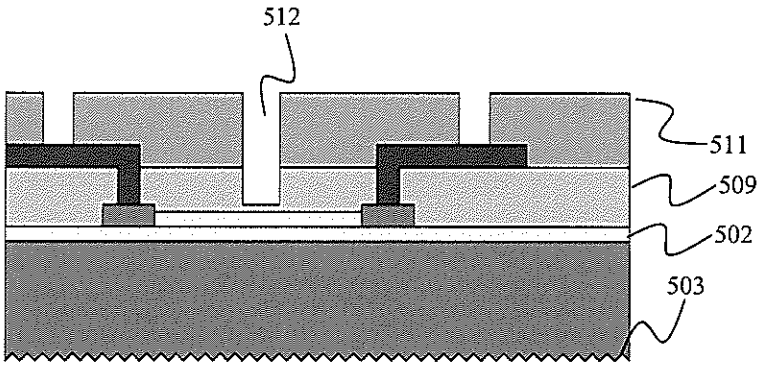

FIG. 5 (j)

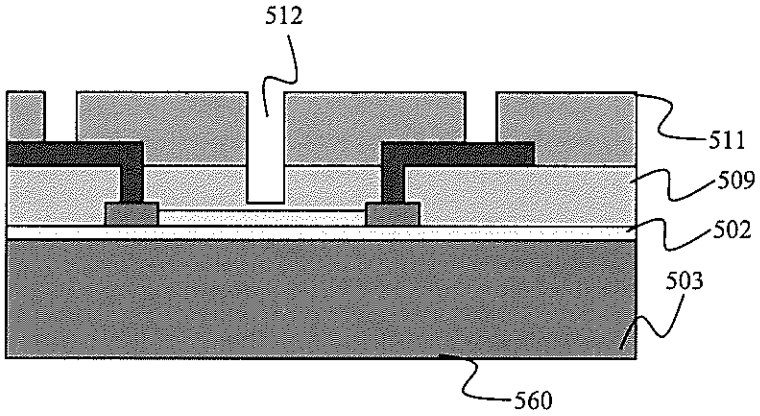

FIG. 5 (k)

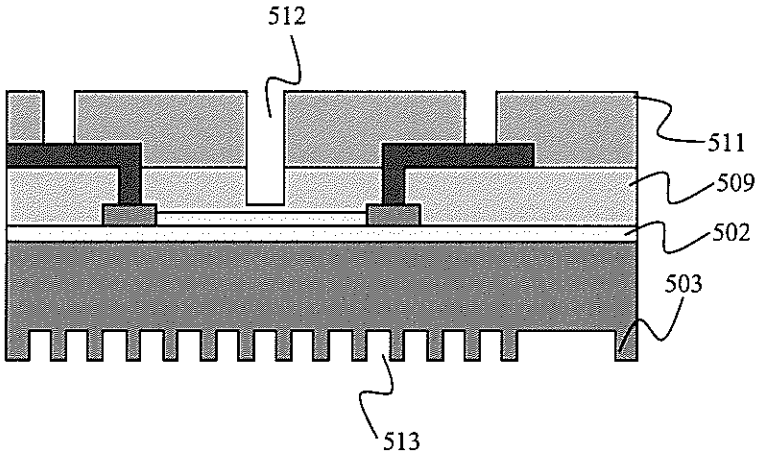

FIG. 5 (l)

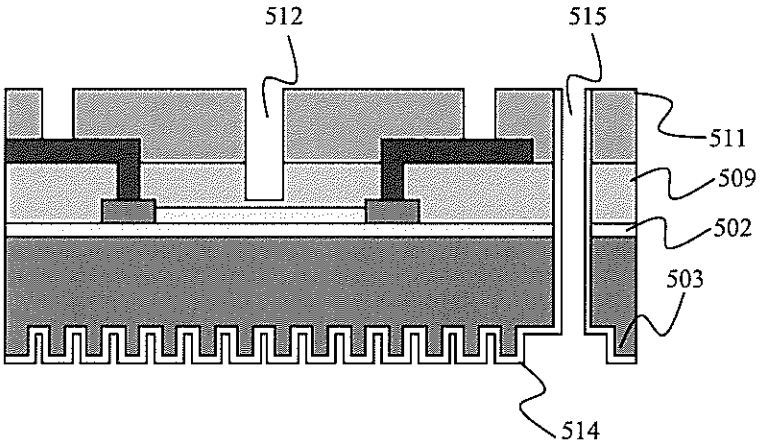

FIG. 5 (m)

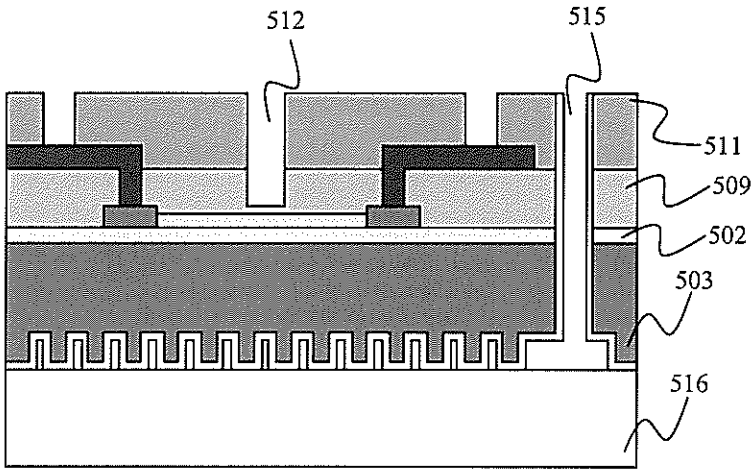

FIG. 5 (n)

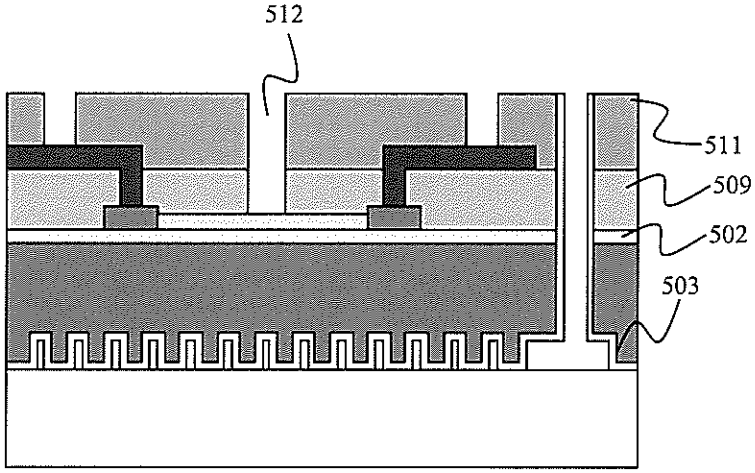

FIG. 6

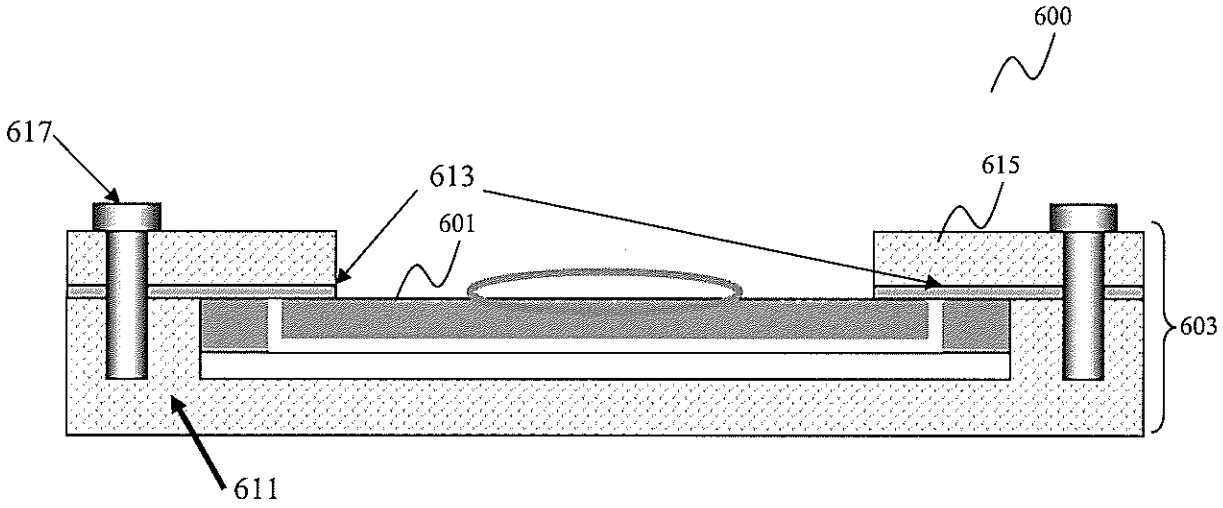

FIG. 7

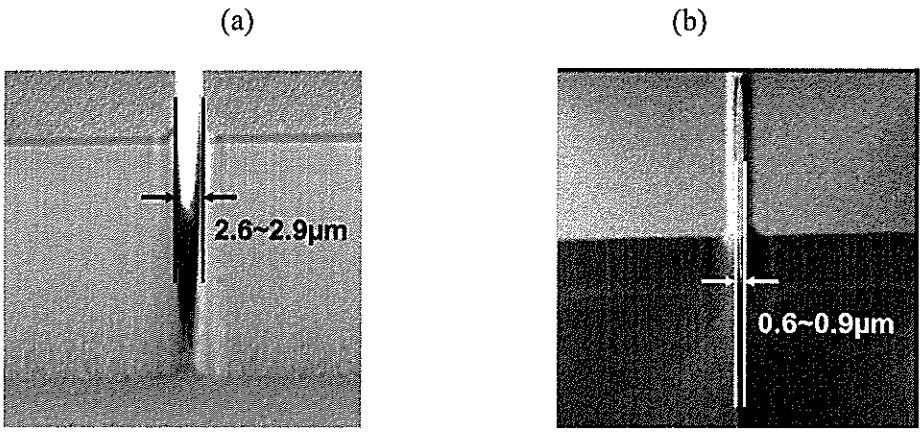

FIG. 8 (a)

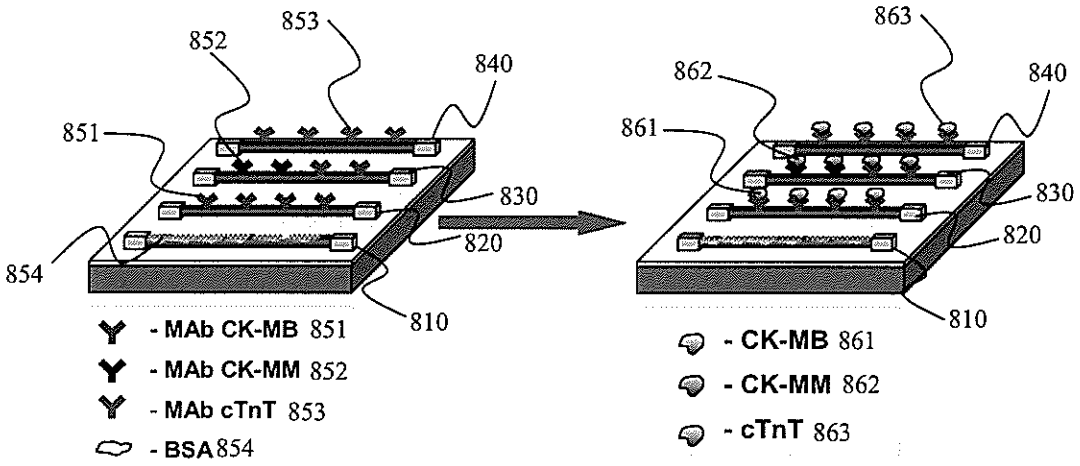
853
852
840
851
830
820
854
810
- MAb CK-MB 851
- MAb CK-MM 852
- MAb cTnT 853
- BSA 854
863
862
840
861
830
820
810
- CK-MB 861
- CK-MM 862
- cTnT 863

FIG. 8 (b)

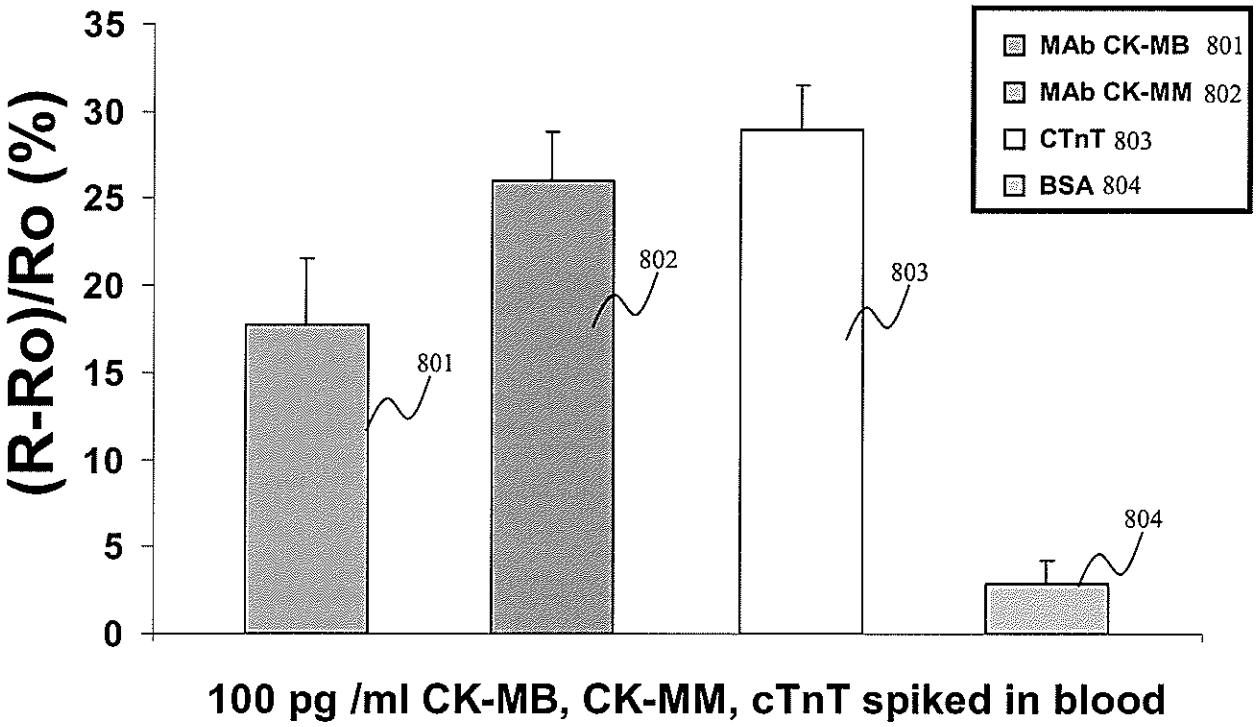
(R-Ro)/Ro (%)
35
30
25
20
15
10
5
0
MAb CK-MB 801
MAb CK-MM 802
CTnT 803
BSA 804
801
802
803
804
100 pg /ml CK-MB, CK-MM, cTnT spiked in blood