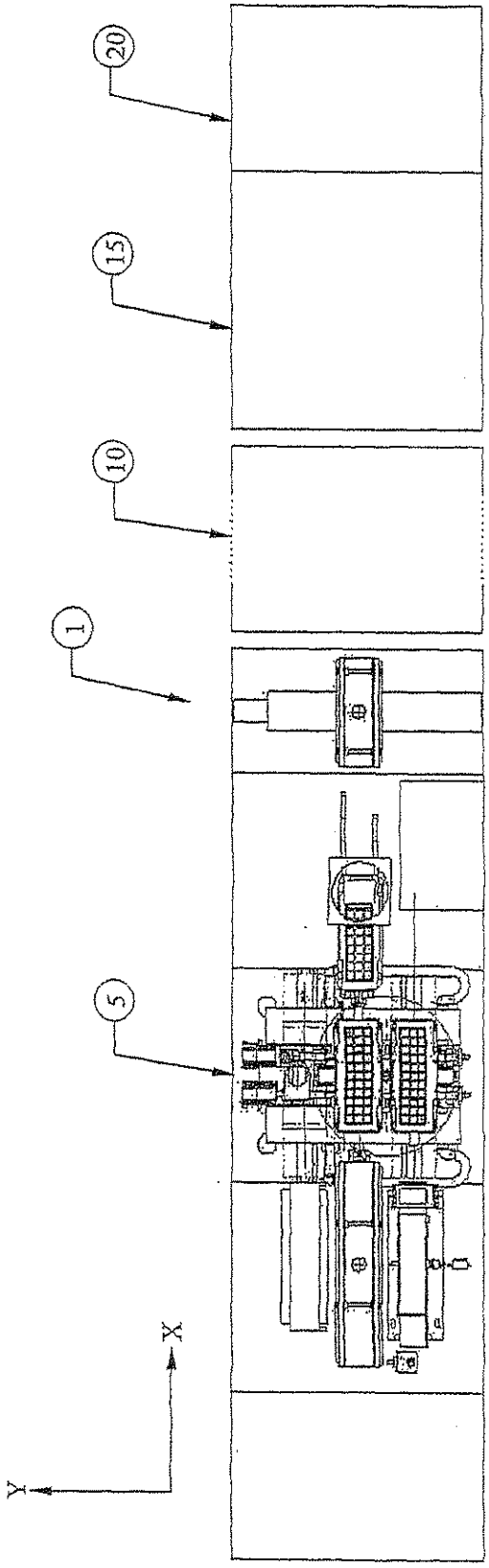

FIGURE 1A

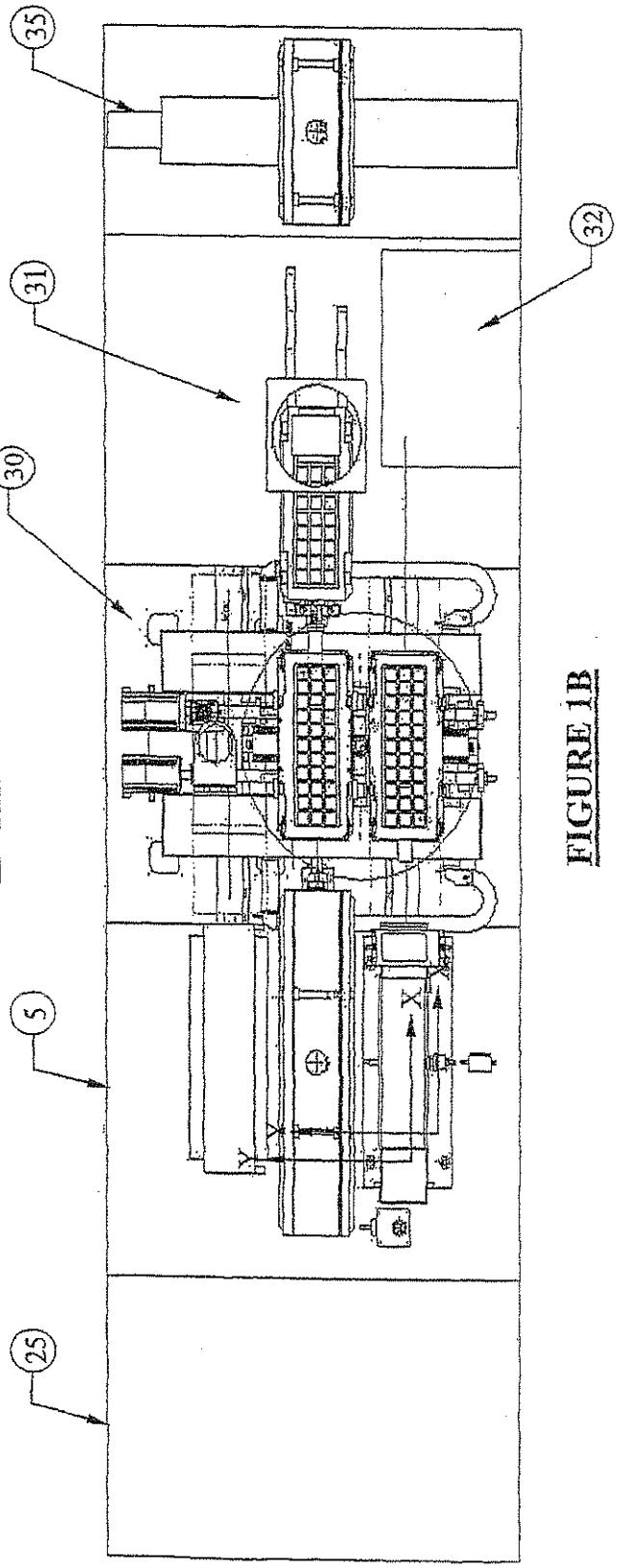

FIGURE 1B

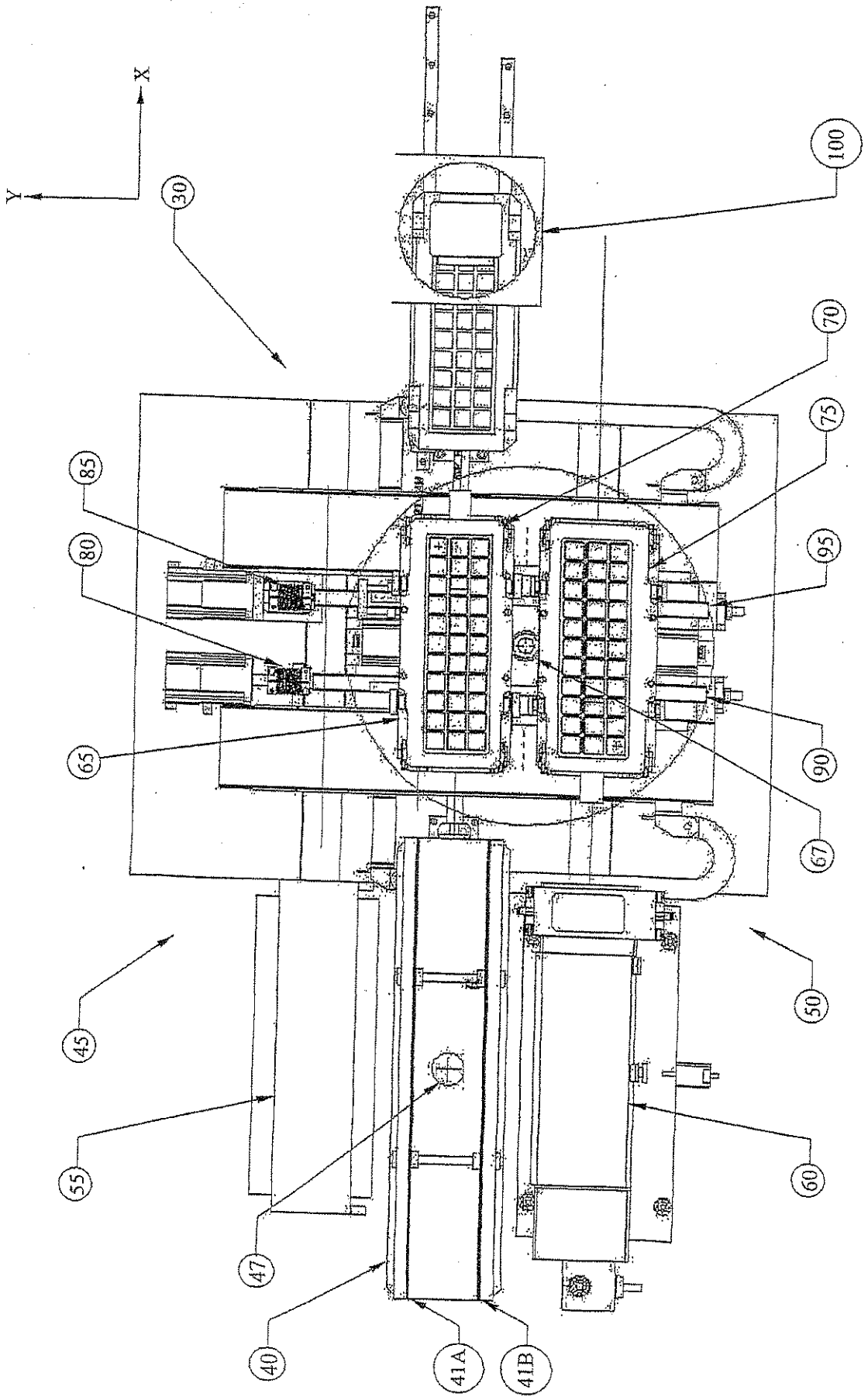

FIGURE 2

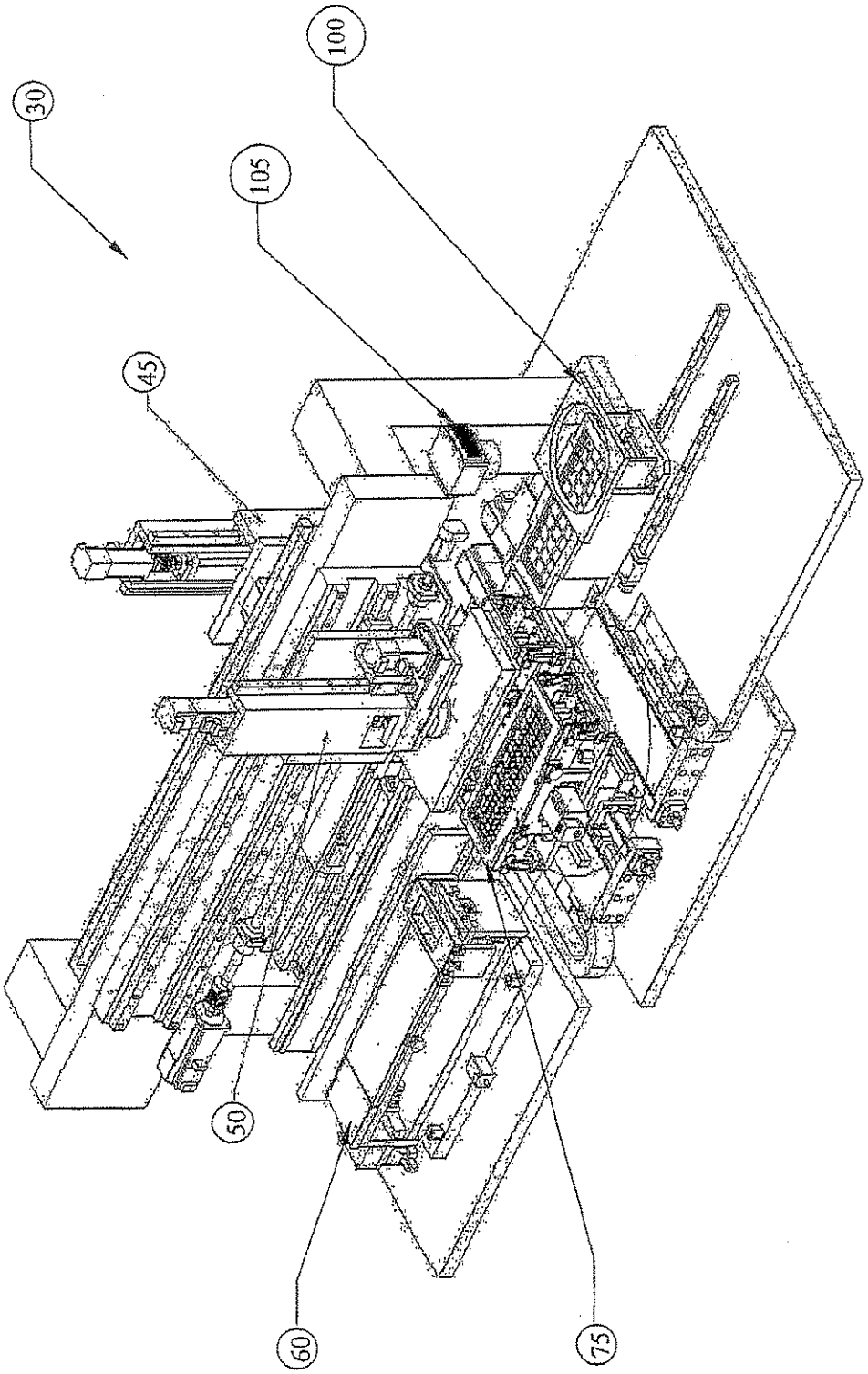

FIGURE 3

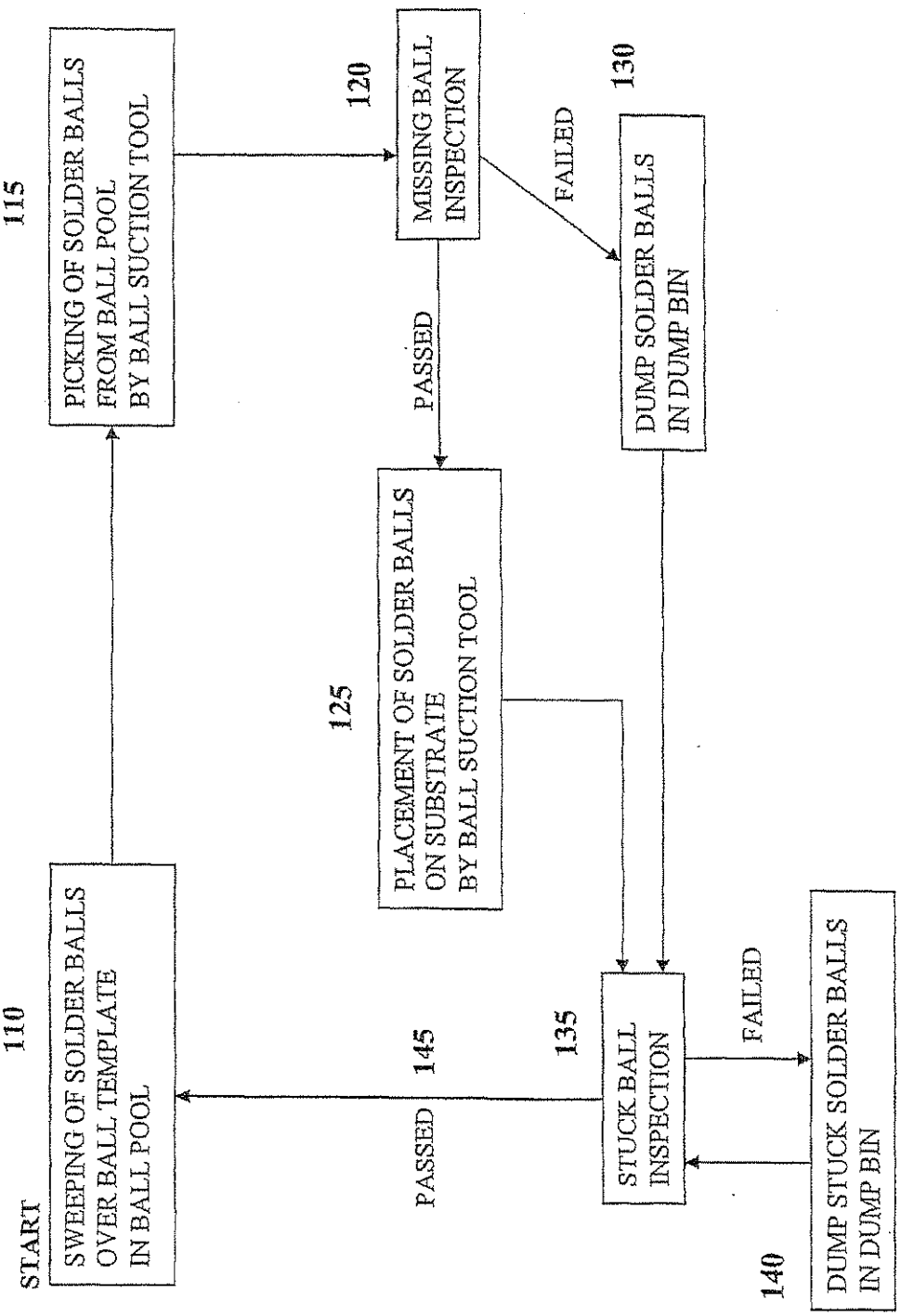
START
110
SWEEPING OF SOLDER BALLS
OVER BALL TEMPLATE
IN BALL POOL
115
PICKING OF SOLDER BALLS
FROM BALL POOL
BY BALL SUCTION TOOL
120
MISSING BALL
INSPECTION
PASSED
FAILED
130
DUMP SOLDER BALLS
IN DUMP BIN
125
PLACEMENT OF SOLDER BALLS
ON SUBSTRATE
BY BALL SUCTION TOOL
145
PASSED
135
STUCK BALL
INSPECTION
FAILED
140
DUMP STUCK SOLDER BALLS
IN DUMP BIN

FIGURE 4

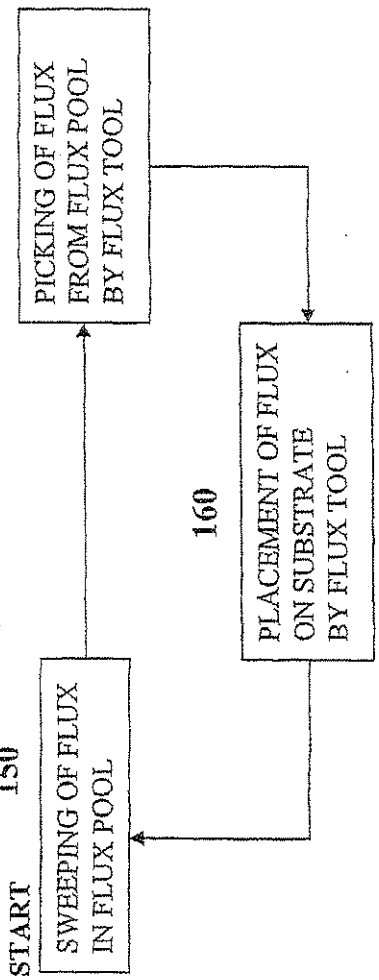
START
150
SWEEPING OF FLUX IN FLUX POOL
155
PICKING OF FLUX FROM FLUX POOL BY FLUX TOOL
160
PLACEMENT OF FLUX ON SUBSTRATE BY FLUX TOOL

FIGURE 5

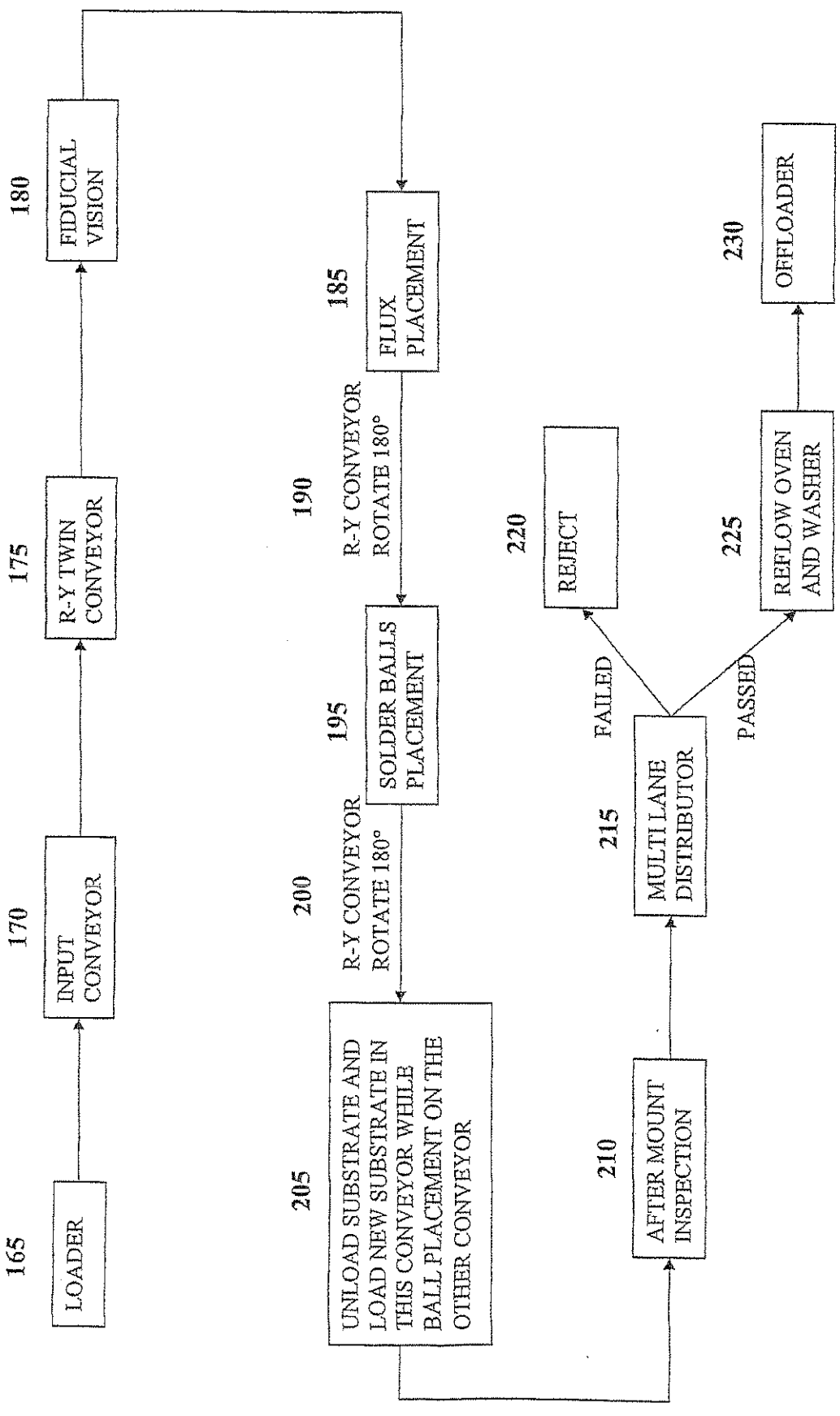
165
LOADER
170
INPUT CONVEYOR
175
R-Y TWIN CONVEYOR
180
FIDUCIAL VISION
185
FLUX PLACEMENT
190
R-Y CONVEYOR ROTATE 180°
195
SOLDER BALLS PLACEMENT
200
R-Y CONVEYOR ROTATE 180°
205
UNLOAD SUBSTRATE AND LOAD NEW SUBSTRATE IN THIS CONVEYOR WHILE BALL PLACEMENT ON THE OTHER CONVEYOR
210
AFTER MOUNT INSPECTION
215
MULTI LANE DISTRIBUTOR
220
REJECT
FAILED
PASSED
225
REFLOW OVEN AND WASHER
230
OFFLOADER

FIGURE 6

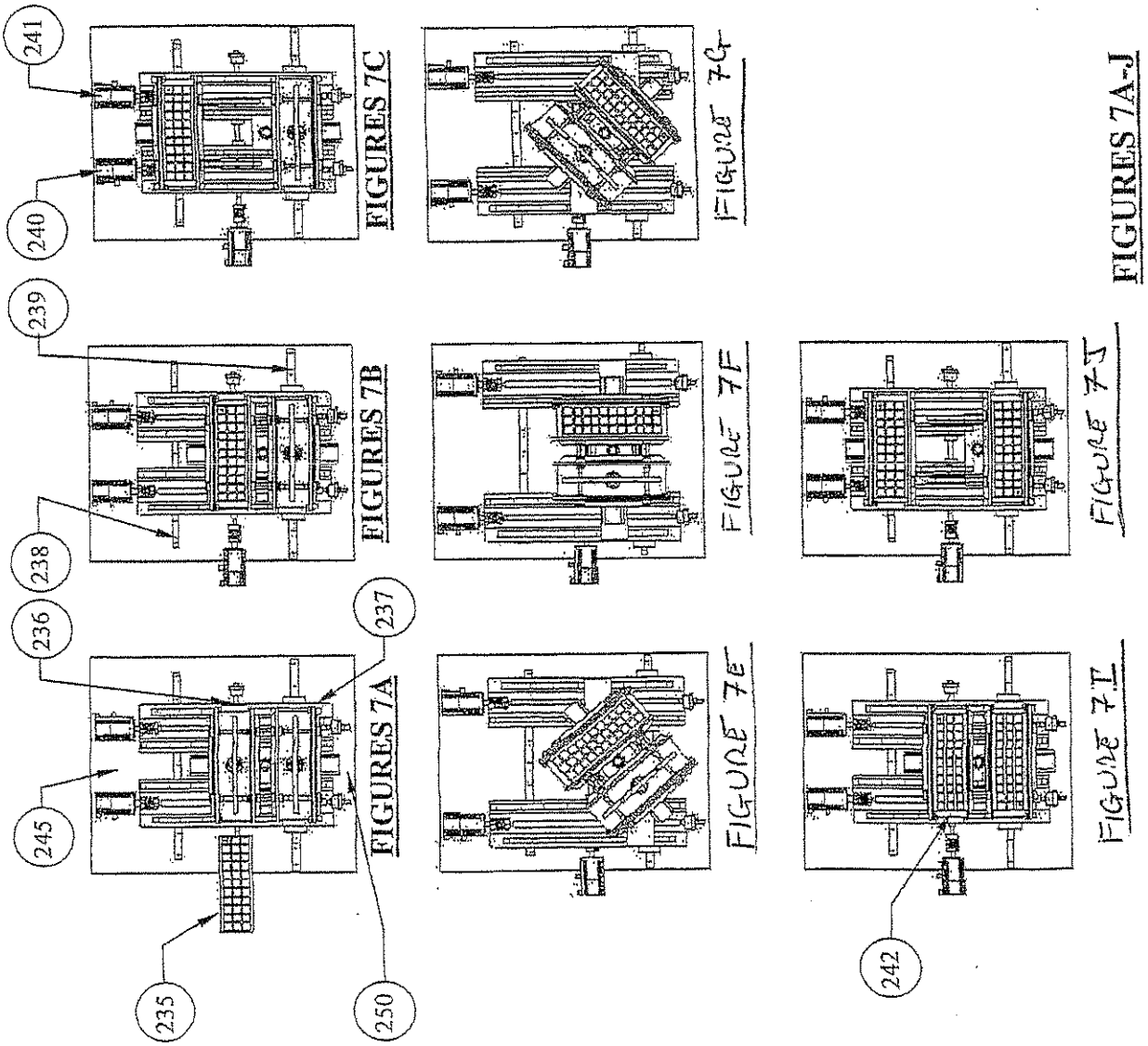

FIGURES 7A
FIGURES 7B
FIGURES 7C
FIGURES 7D
FIGURE 7E
FIGURE 7F
FIGURE 7G
FIGURE 7H
FIGURE 7I
FIGURE 7J
FIGURES 7A-J

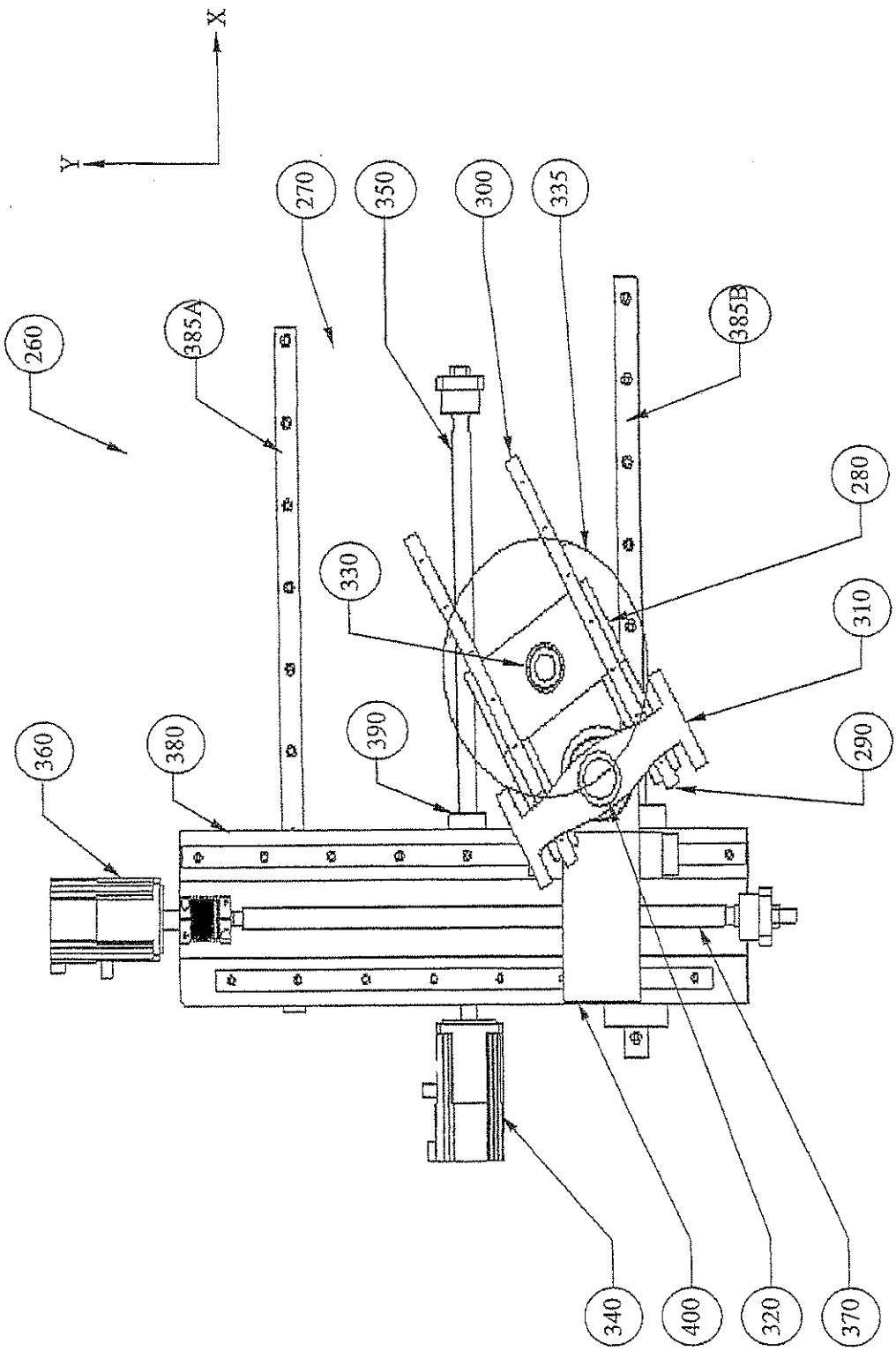
X
Y
270
350
300
335
260
385A
385B
280
330
310
390
290
360
380
340
400
320
370

FIGURE 8

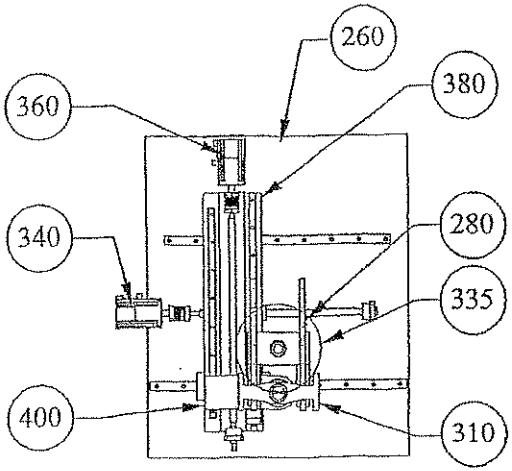

FIGURE 9A

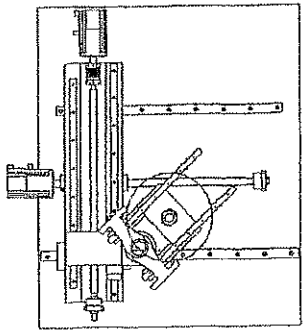

FIGURE 9B

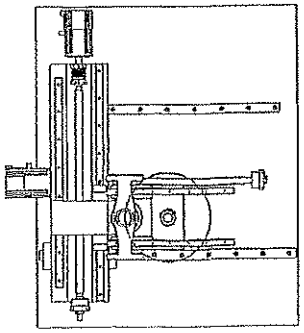

FIGURE 9C

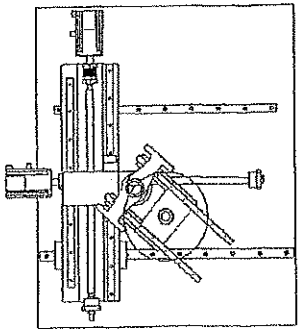

FIGURE 9D

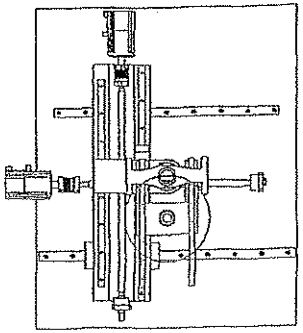

FIGURE 9E

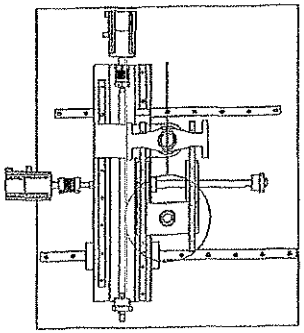

FIGURE 9F

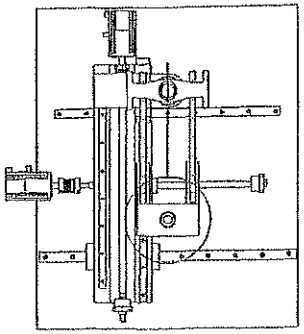

FIGURE 9G

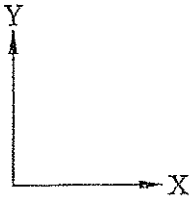

FIGURE 9A-G

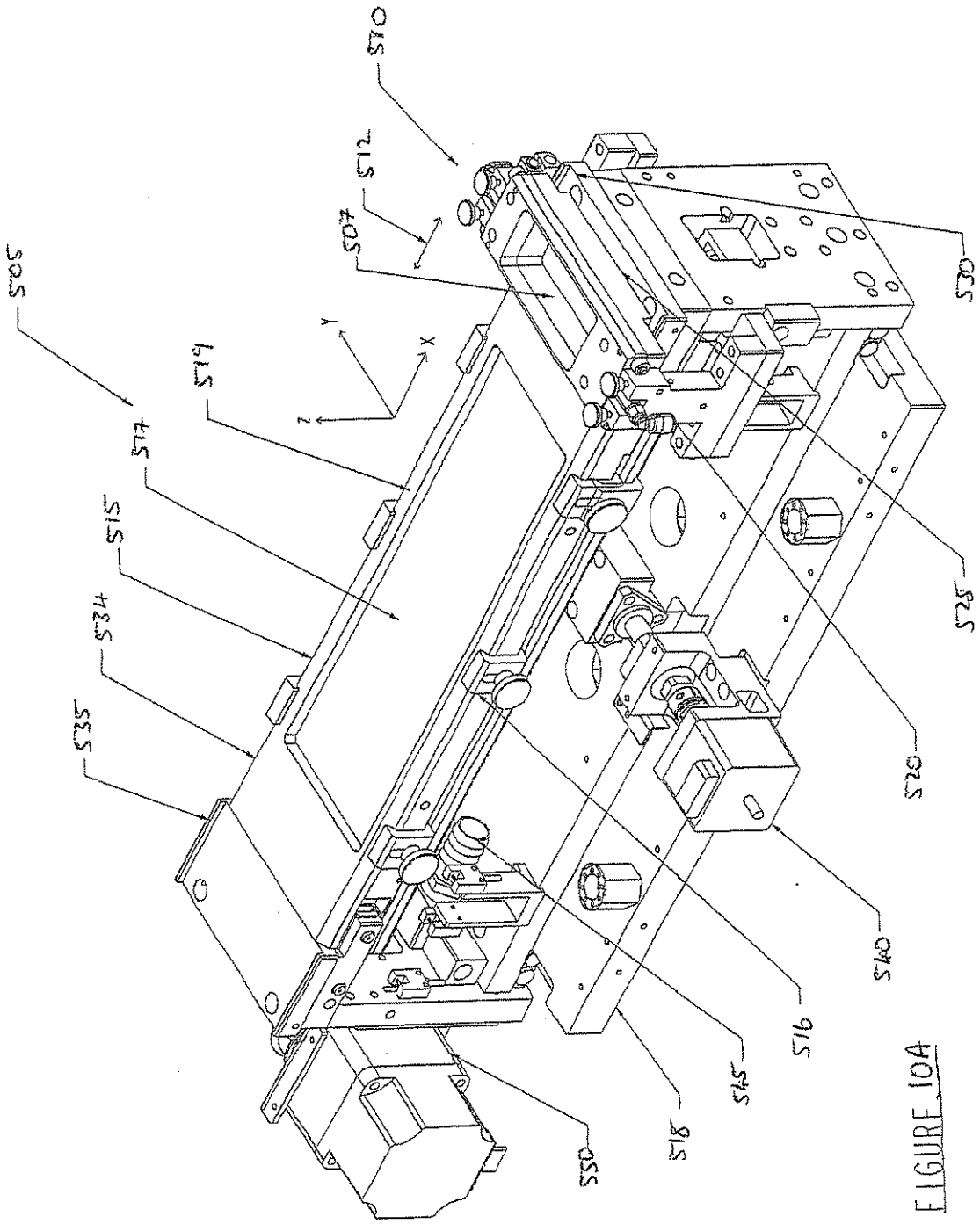
505
510
512
507
519
517
515
534
535
530
525
520
540
516
545
518
550
Y
X
Z

FIGURE 10A

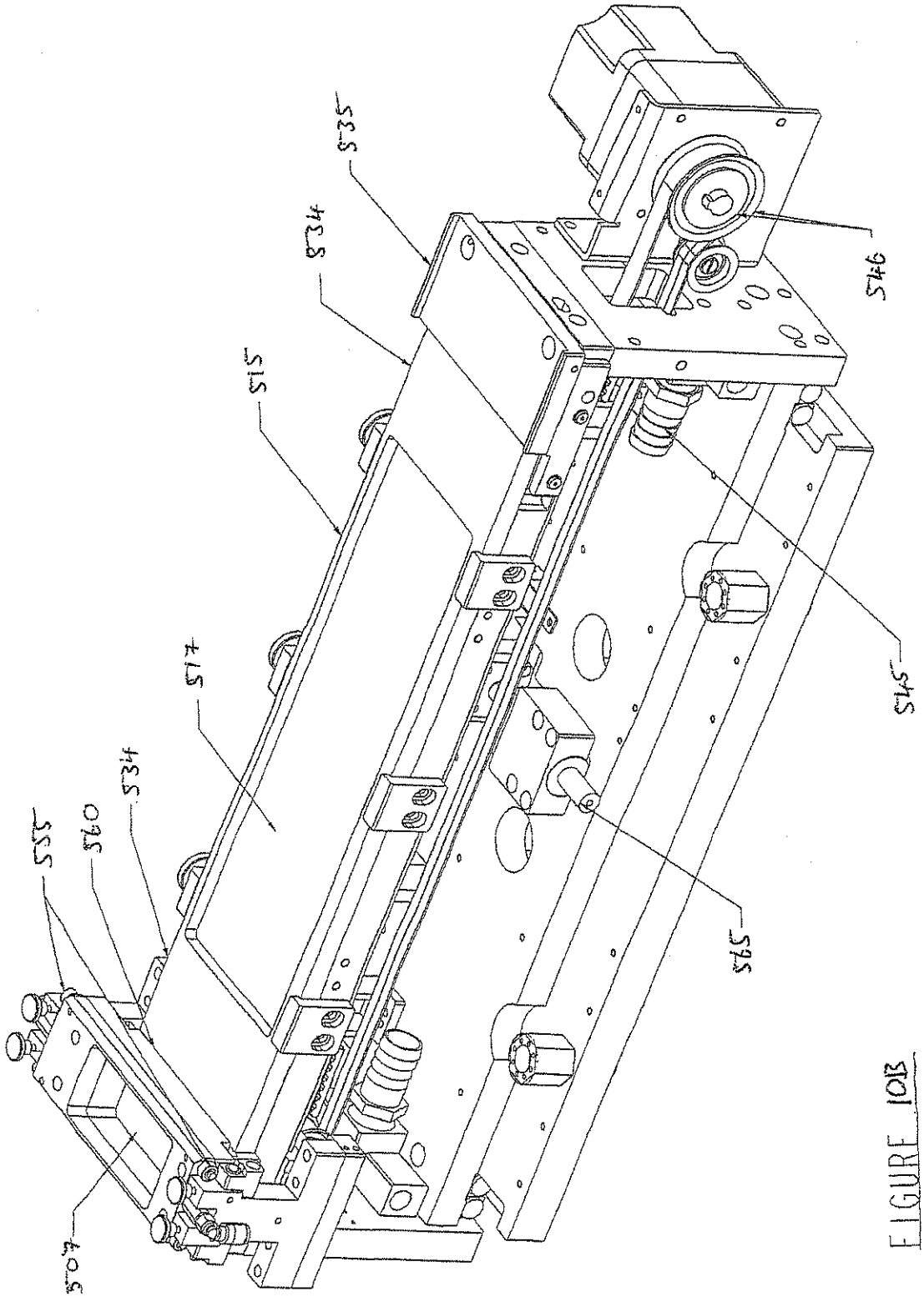

FIGURE 10B

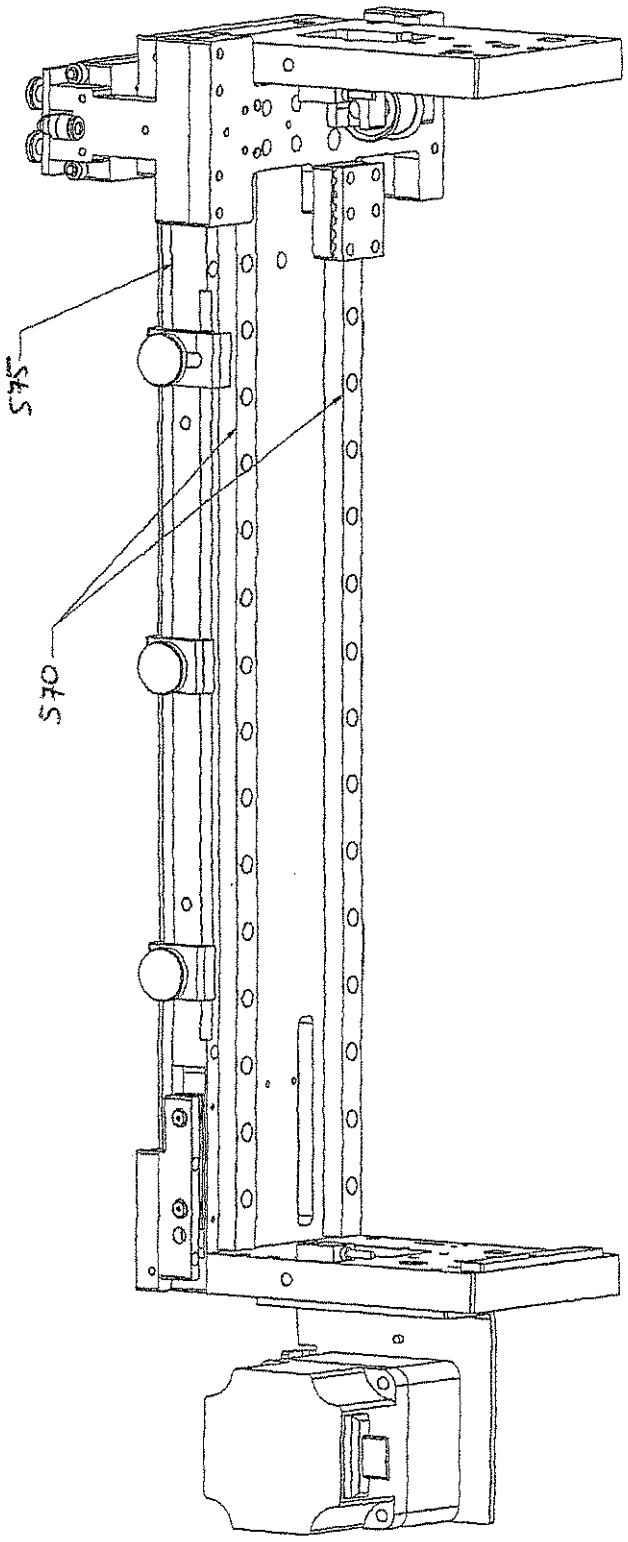

FIGURE 10C

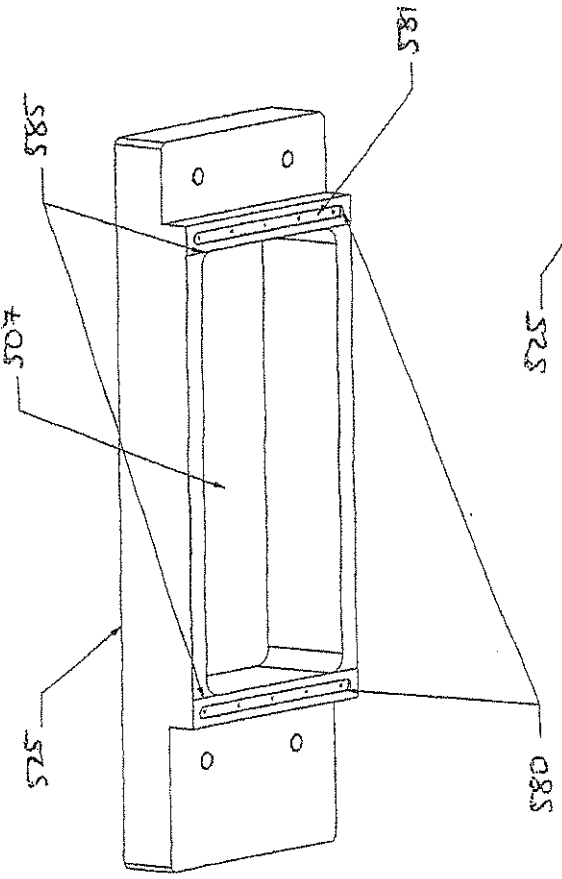

FIGURE 11A

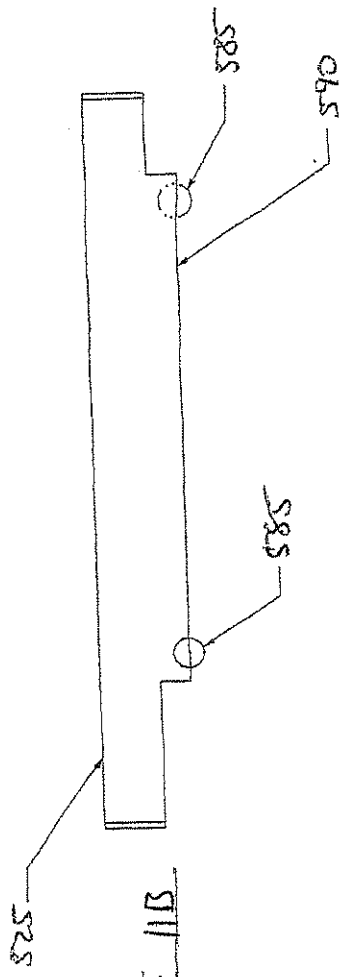

FIGURE 11B

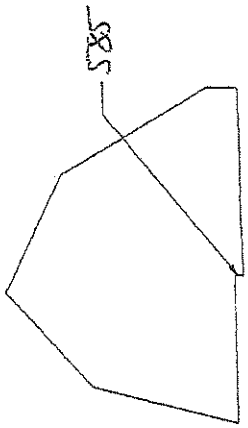

FIGURE 11C

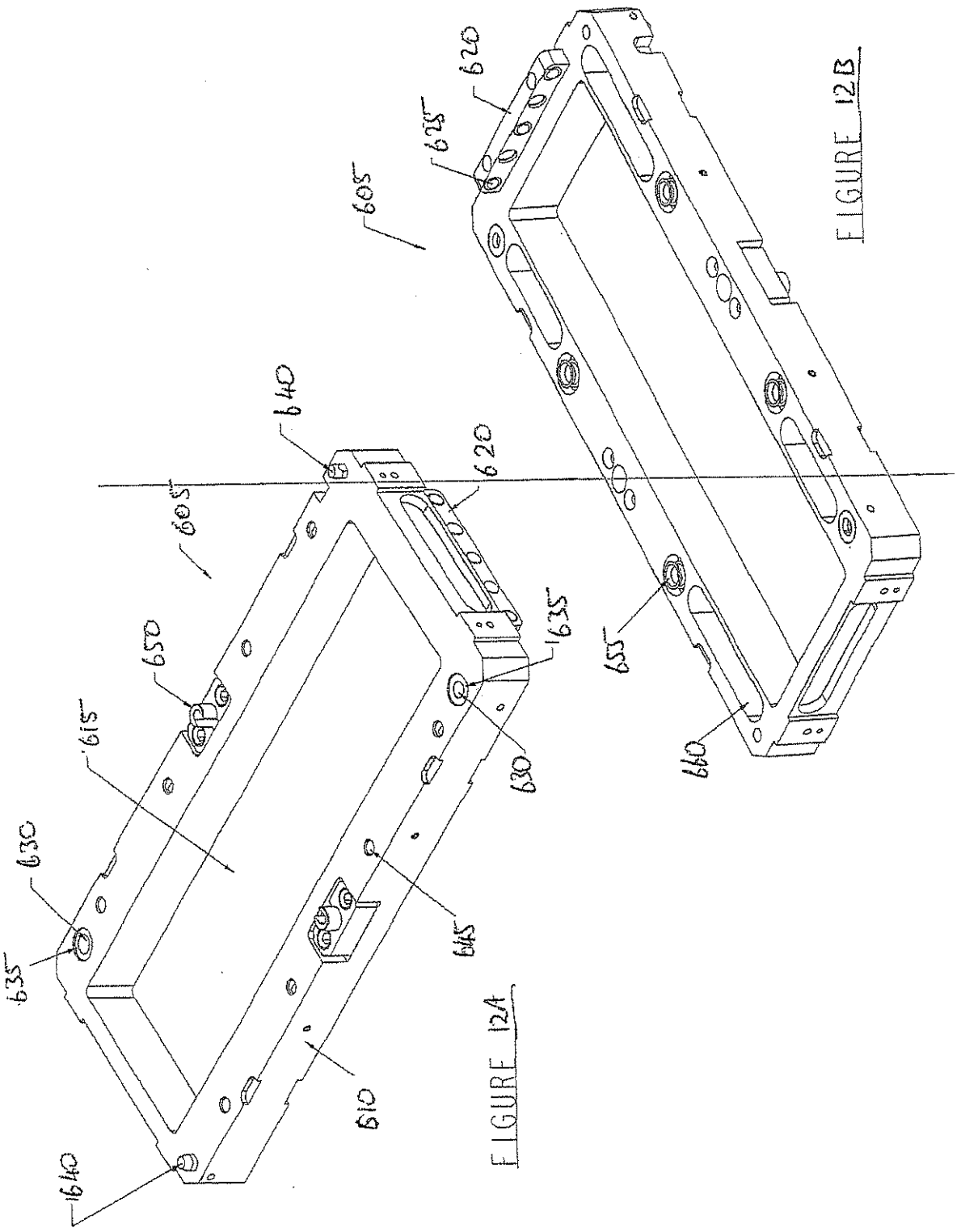

FIGURE 12A

FIGURE 12B

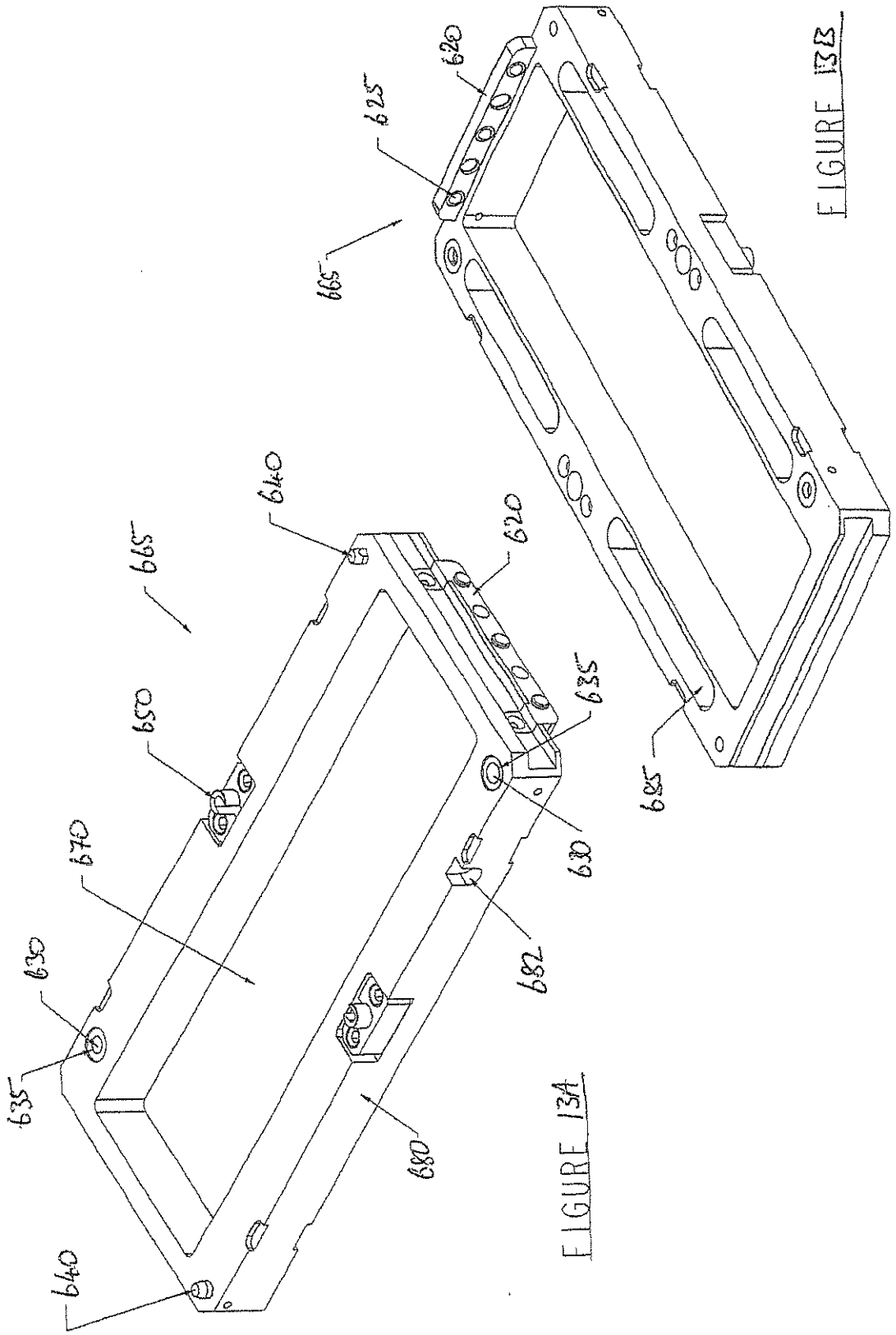

FIGURE 13B

FIGURE 13A

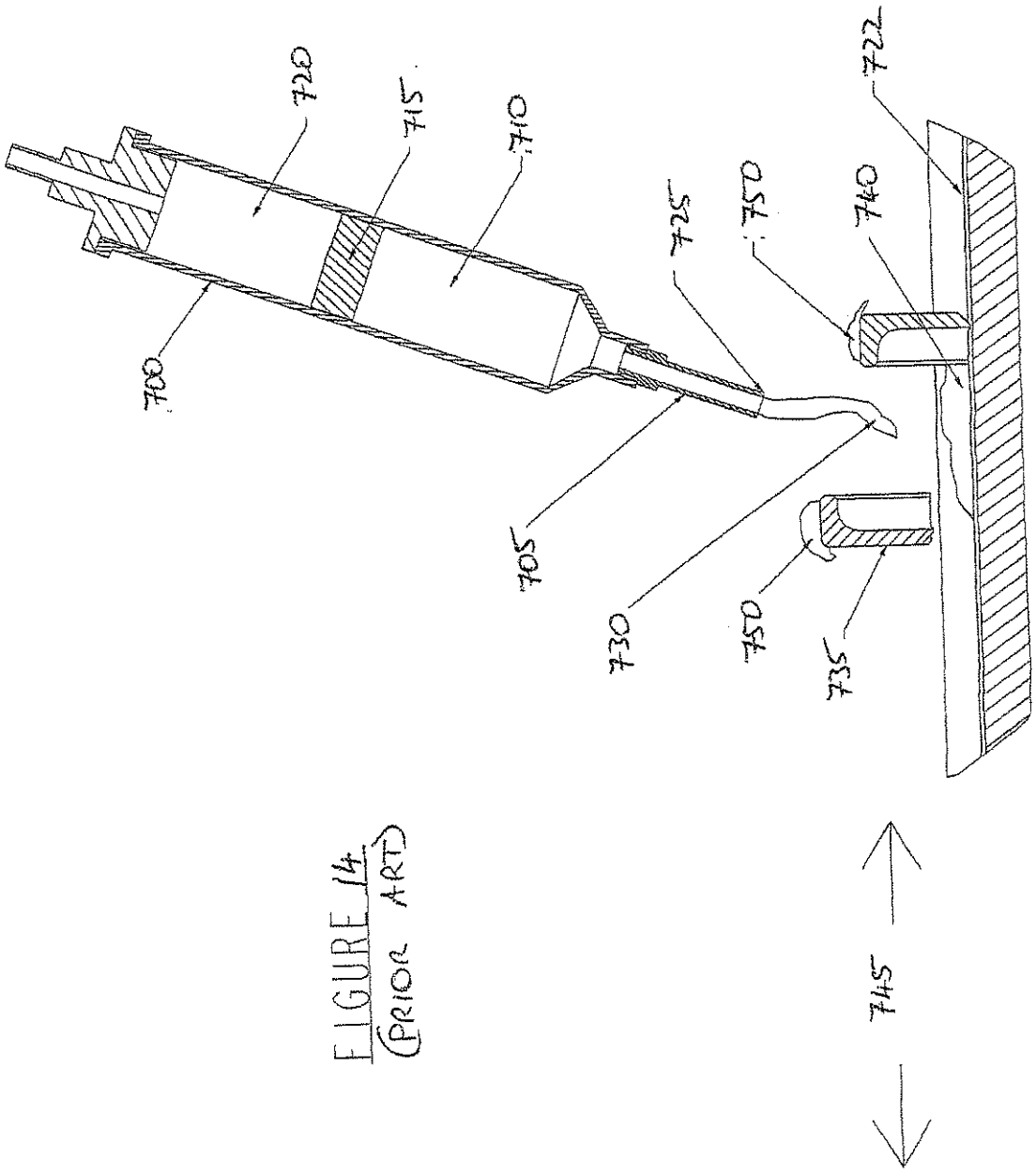

FIGURE 14
(PRIOR ART)

FIGURE 15

