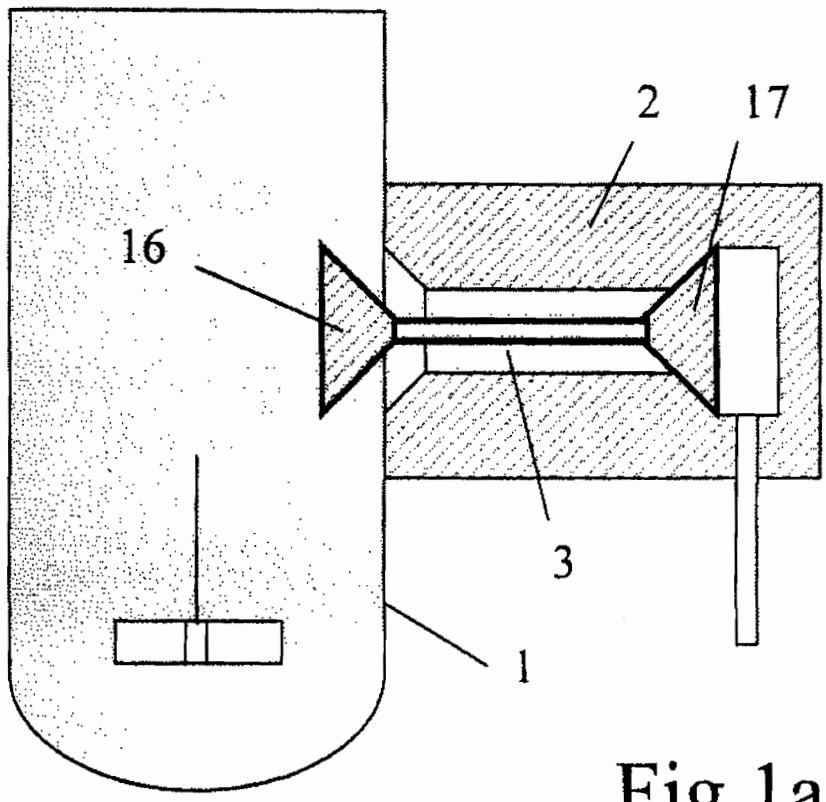

Fig.1a

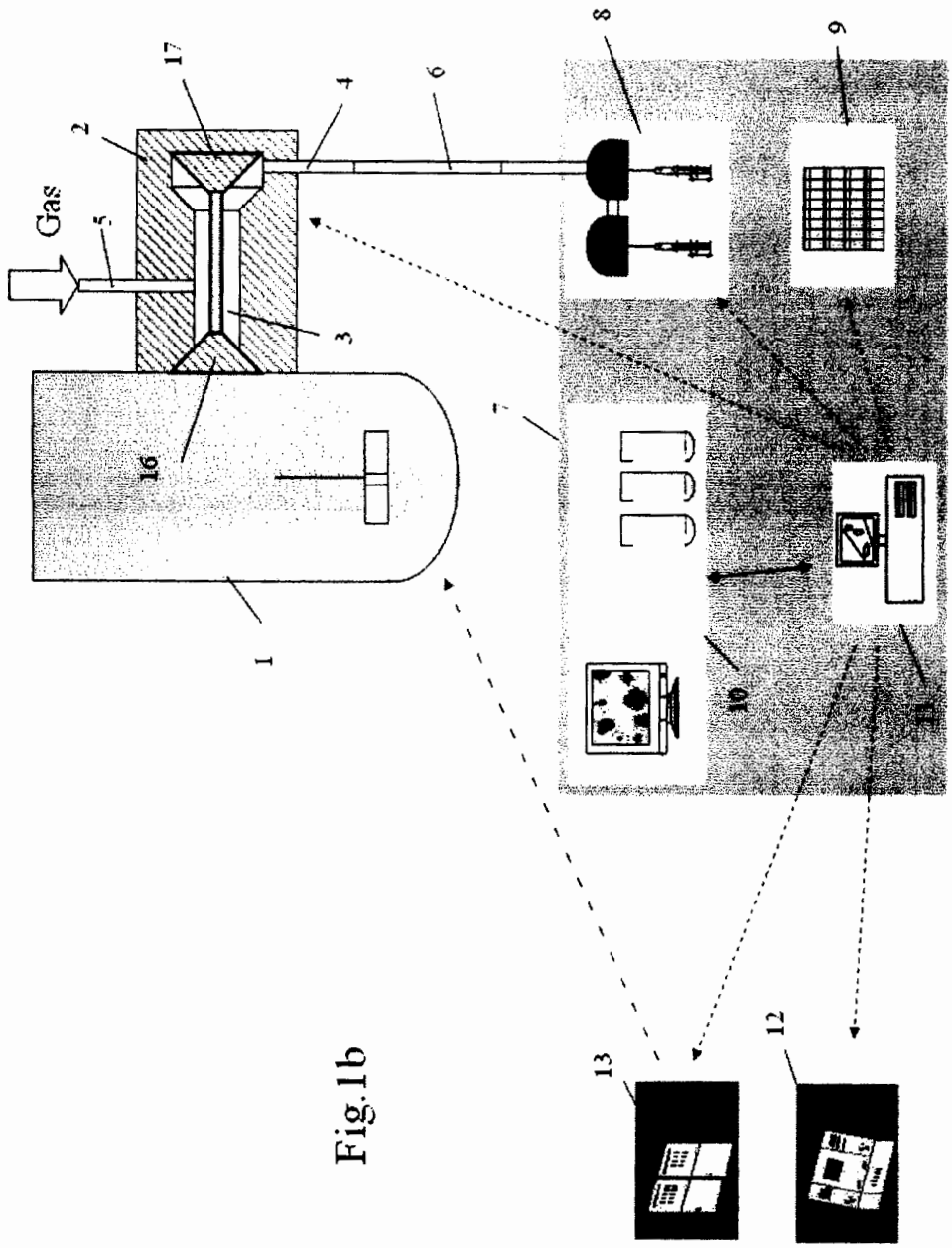

Fig.1b

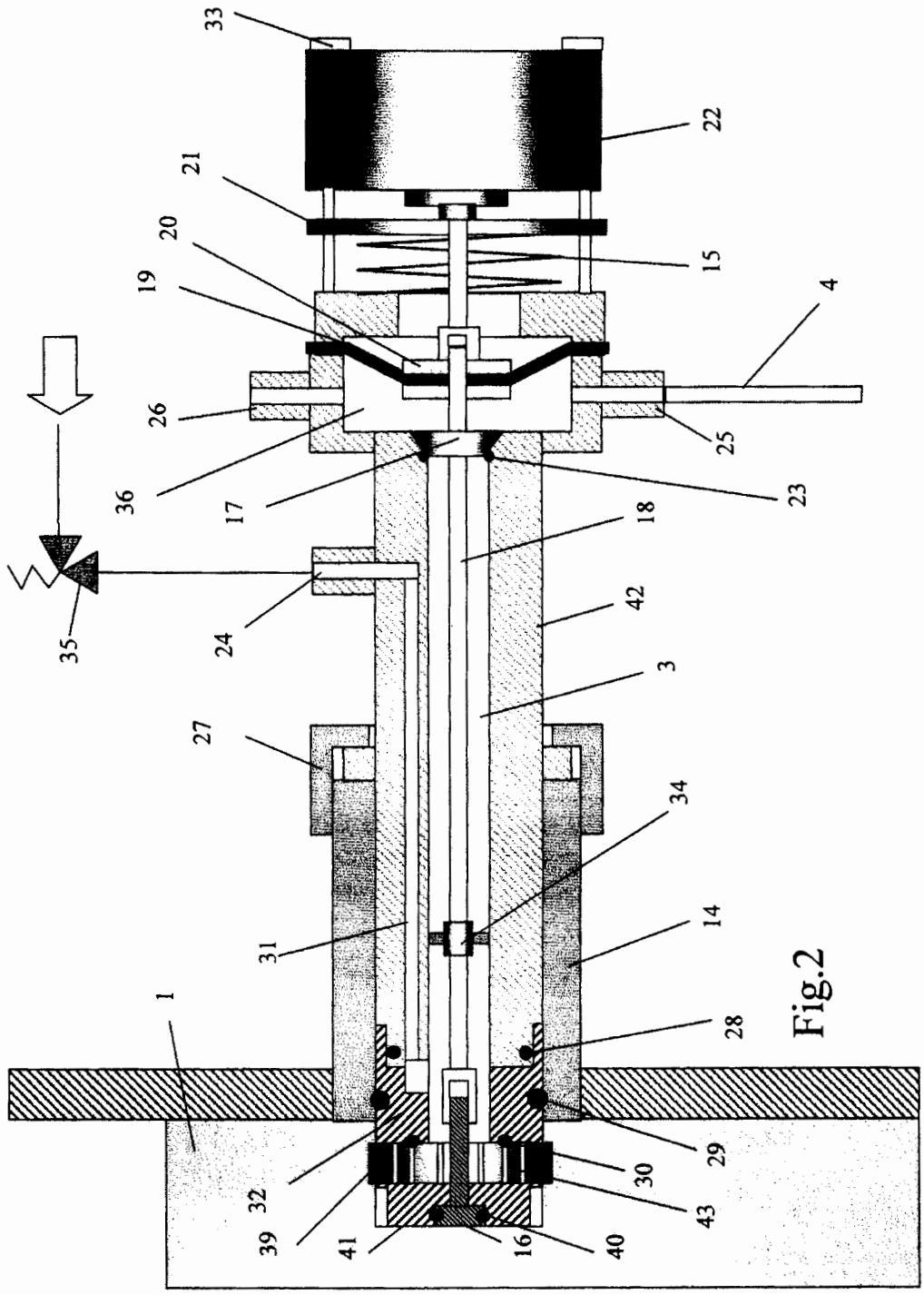
33
22
21
20
15
19
4
26
25
36
17
23
18
24
42
35
3
27
34
31
14
1
28
29
30
32
43
39
41
16
40

Fig.2

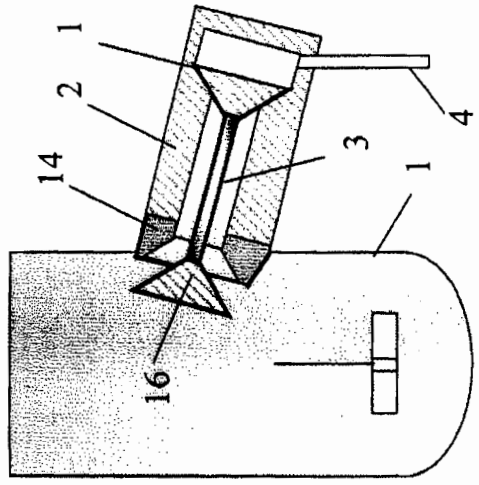

Fig. 3a

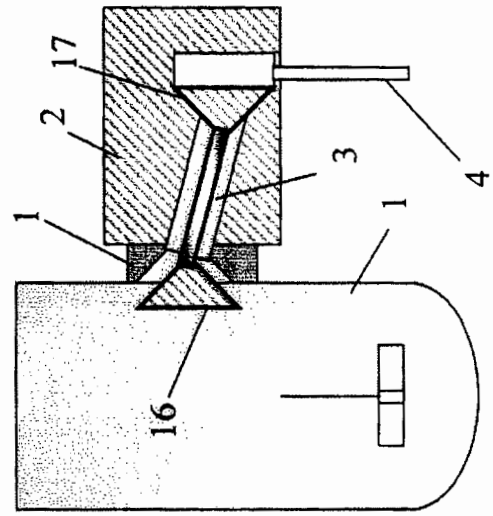

Fig. 3b

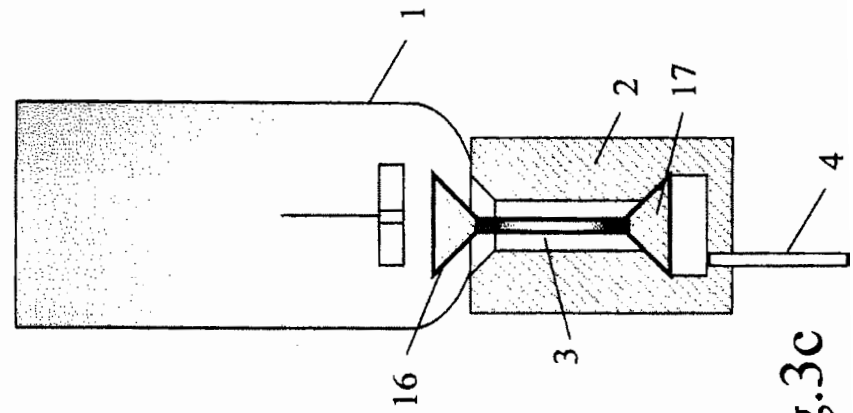

Fig.3c

Fig. 4

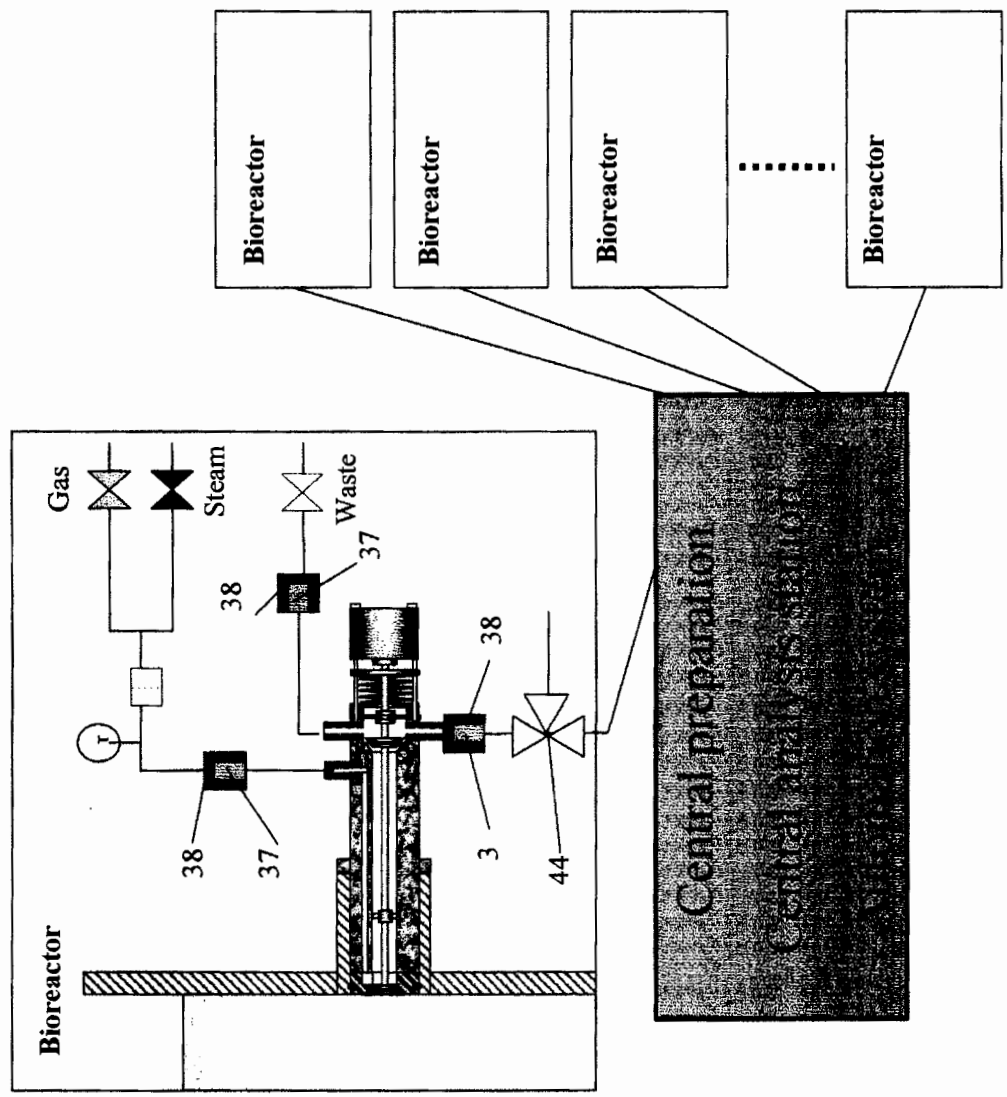
Bioreactor
Bioreactor
Bioreactor
Bioreactor
Central preparation
Gas
Steam
Waste
37
38
38
38
37
3
44
Bioreactor

Fig. 5

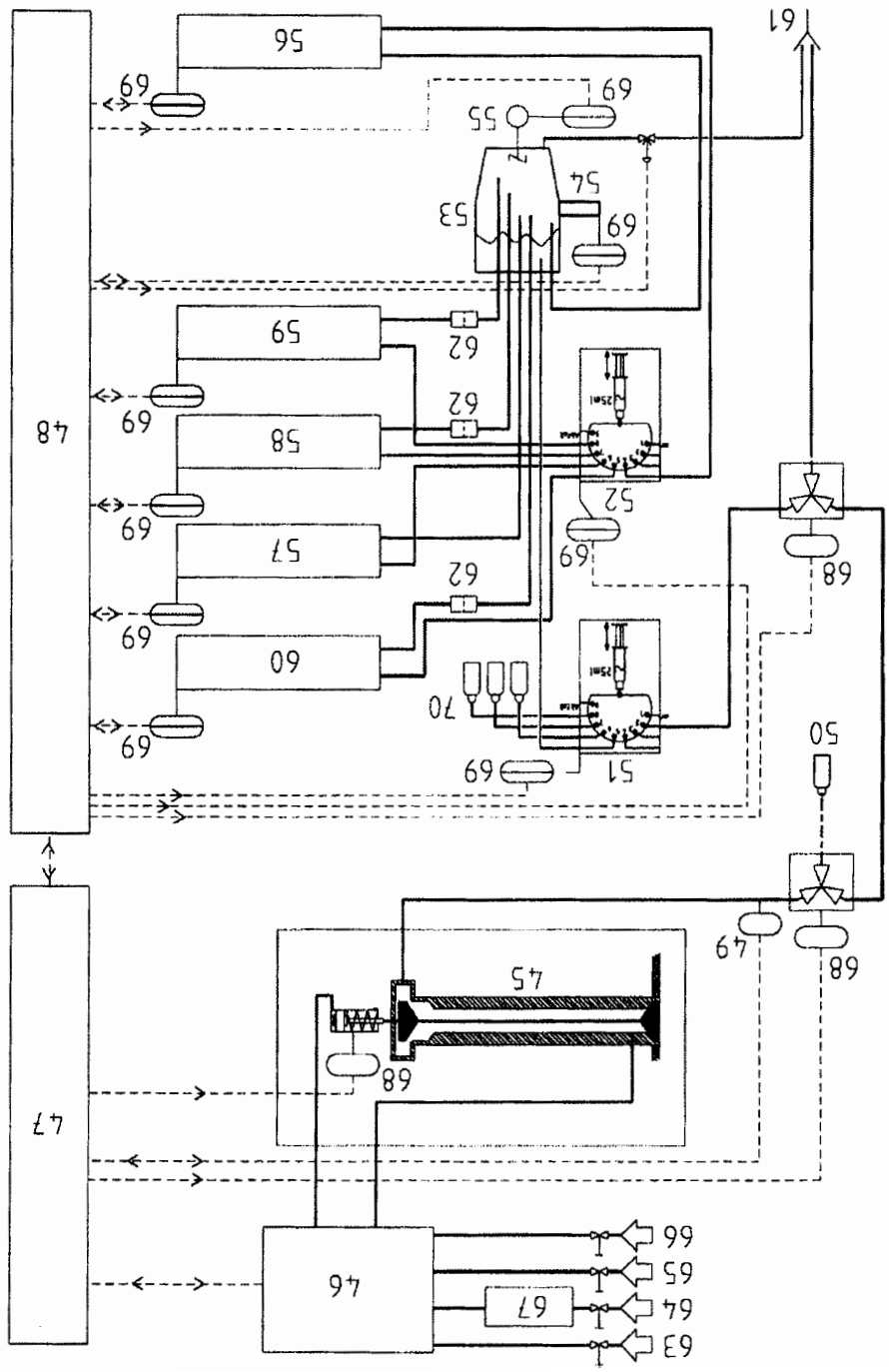
61
56
69
55
54
53
59
62
58
57
60
48
52
51
70
50
68
49
45
47
46
67
66
65
64
63

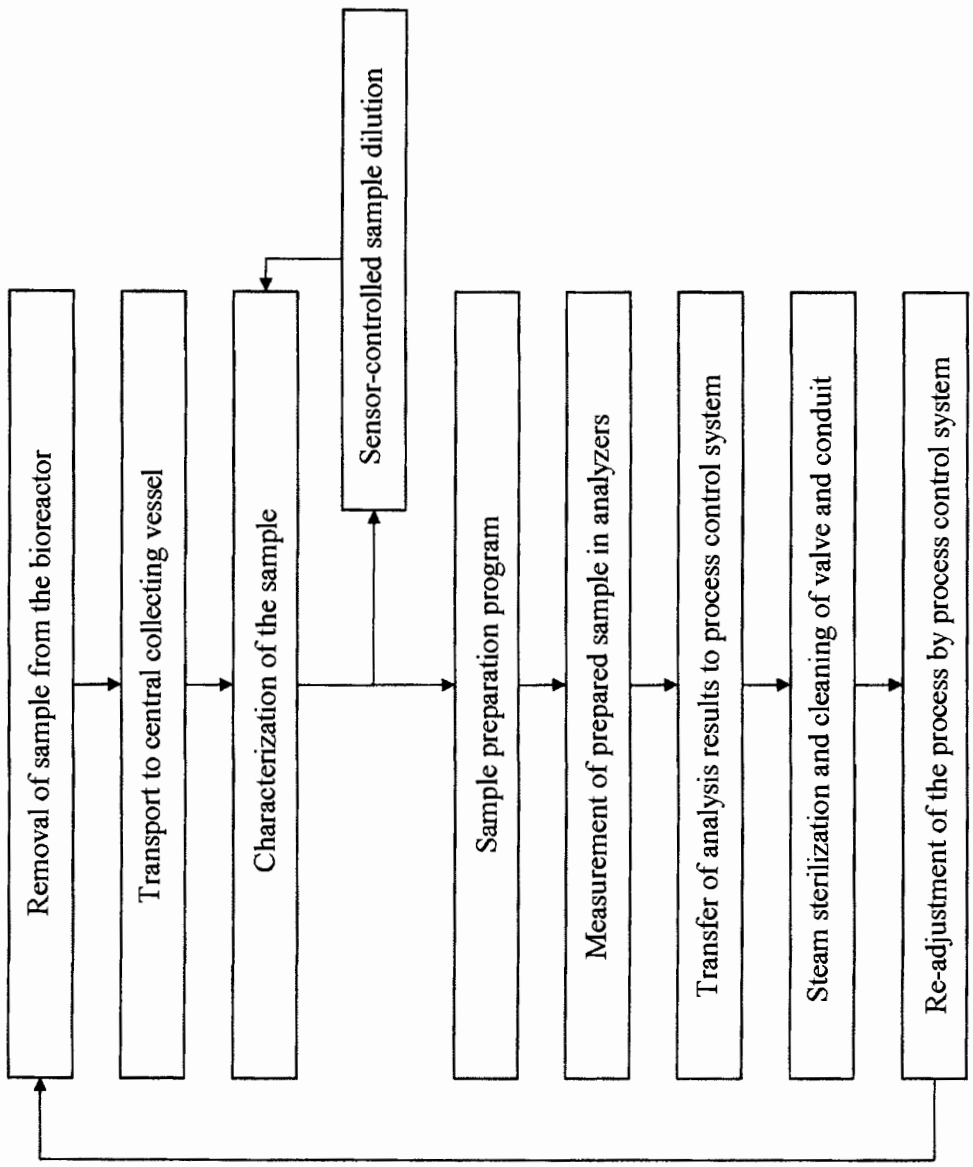
Removal of sample from the bioreactor
Transport to central collecting vessel
Characterization of the sample
Sensor-controlled sample dilution
Sample preparation program
Measurement of prepared sample in analyzers
Transfer of analysis results to process control system
Steam sterilization and cleaning of valve and conduit
Re-adjustment of the process by process control system

Fig. 6