9803900-1
IPOS'S COPY

PCT WORLD INTELLECTUAL PROPERTY ORGANIZATION
International Bureau

INTERNATIONAL APPLICATION PUBLISHED UNDER THE PATENT COOPERATION TREATY (PCT)

(51) International Patent Classification 6 : F16K 31/12 | A1

(11) International Publication Number: WO 97/32151

(43) International Publication Date: 4 September 1997 (04.09.97)

(21) International Application Number: PCT/SE97/00321

(22) International Filing Date: 26 February 1997 (26.02.97)

(30) Priority Data:
1 9600732-3 28 February 1996 (28.02.96) SE

(71) Applicant (*for all designated States except US*): 1 ALFA LAVAL AB [SE/SE]; Borgen, Landerigränd, S-221 86 Lund (SE). 1

(72) Inventor; and
(75) Inventor/Applicant (*for US only*): 1 HILLSTRÖM, Anders [SE/SE]; Plåtslagarvägen 101, S-146 36 Tullinge (SE). 1

(74) Agent: SVENSSON, Else-Marie; Alfa Laval AB, S-147 80 Tumba (SE).

(81) Designated States: AU, BR, CA, CN, JP, KR, NZ, SG, US, European patent (AT, BE, CH, DE, DK, ES, FI, FR, GB, GR, IE, IT, LU, MC, NL, PT, SE).

Published
With international search report.

(54) Title: OUTLET VALVE

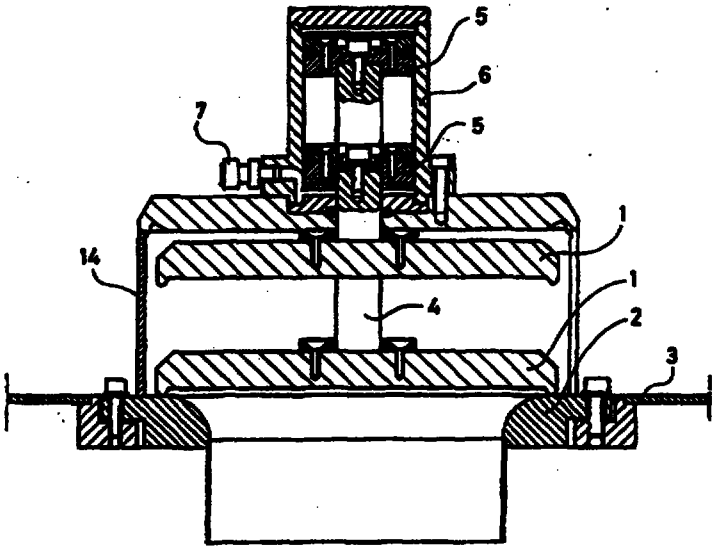

(57) Abstract

An outlet valve is arranged in the bottom of a vessel intended to be filled with liquid comprising a valve disc (1) connected to a piston rod (4) and a piston (5) actuated by a pressure medium. The valve disc (1) is movable between a first and a second position and is arranged to bear against a valve seat (2) in its first closed position. The piston (5) is arranged in an operating device (6) provided with a connection (7) to a source for pressure medium. The operating device (6) is designed as a unit sealed from the liquid and is arranged at such a distance from the valve seat (2) that the liquid, when the valve is open, passes a zone between the operating device (6) and the valve seat (2).