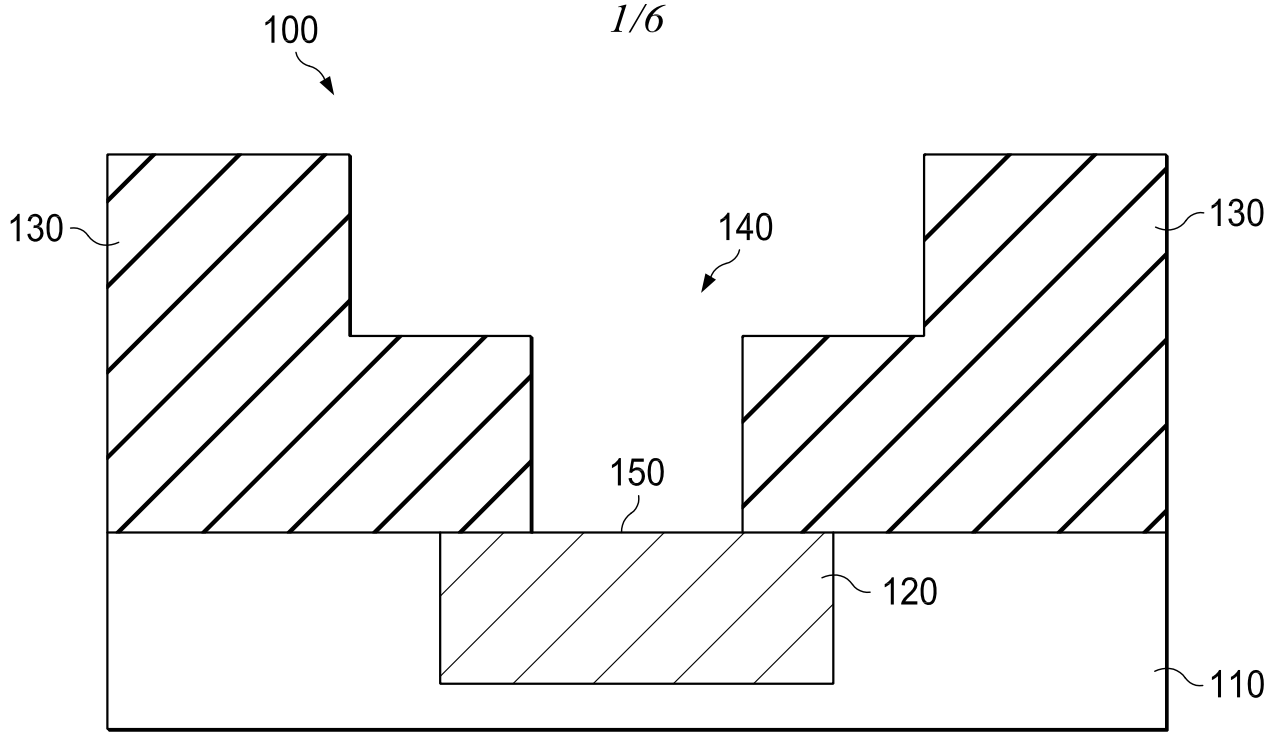

FIG. 1
(PRIOR ART)

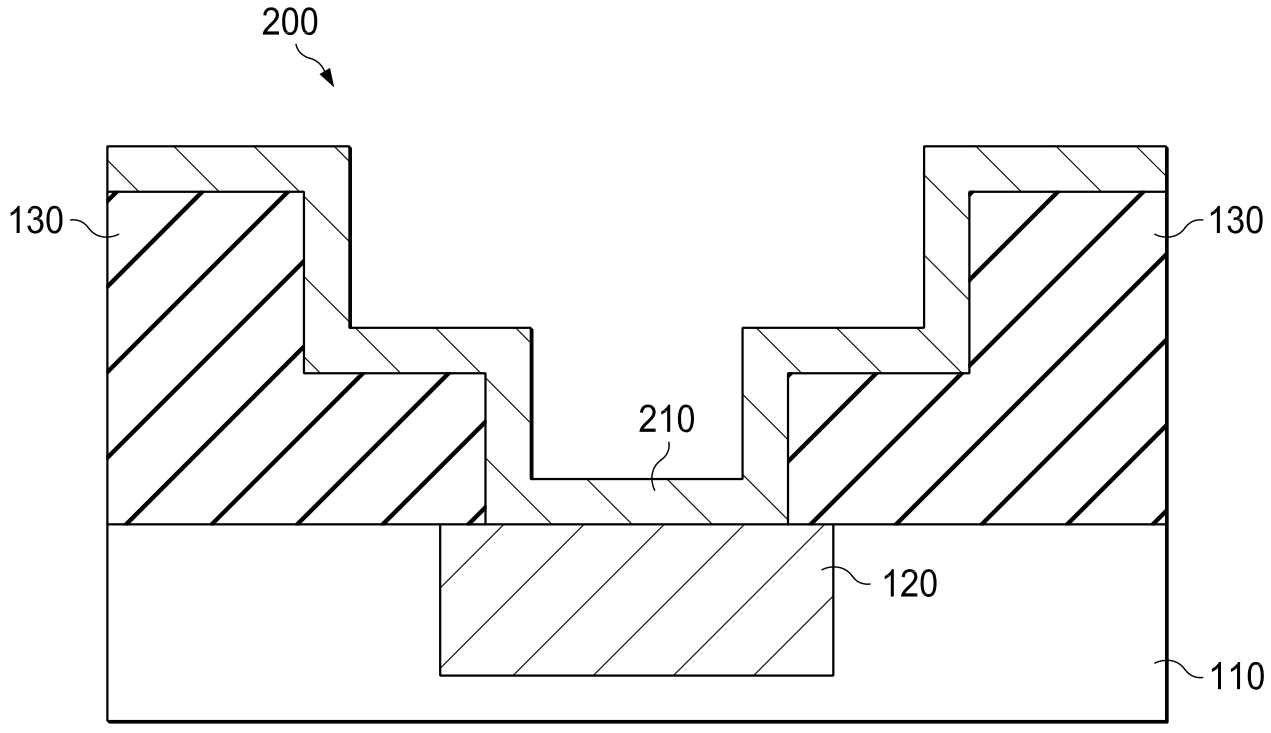

FIG. 2

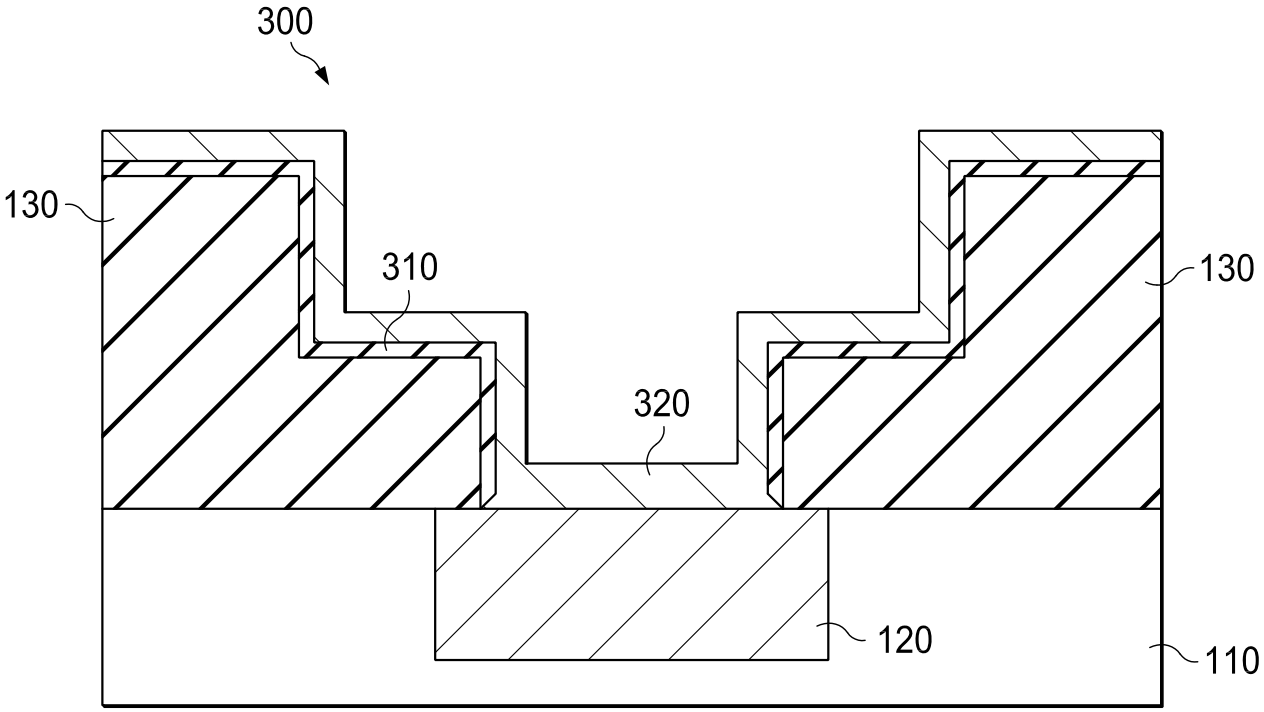

FIG. 3

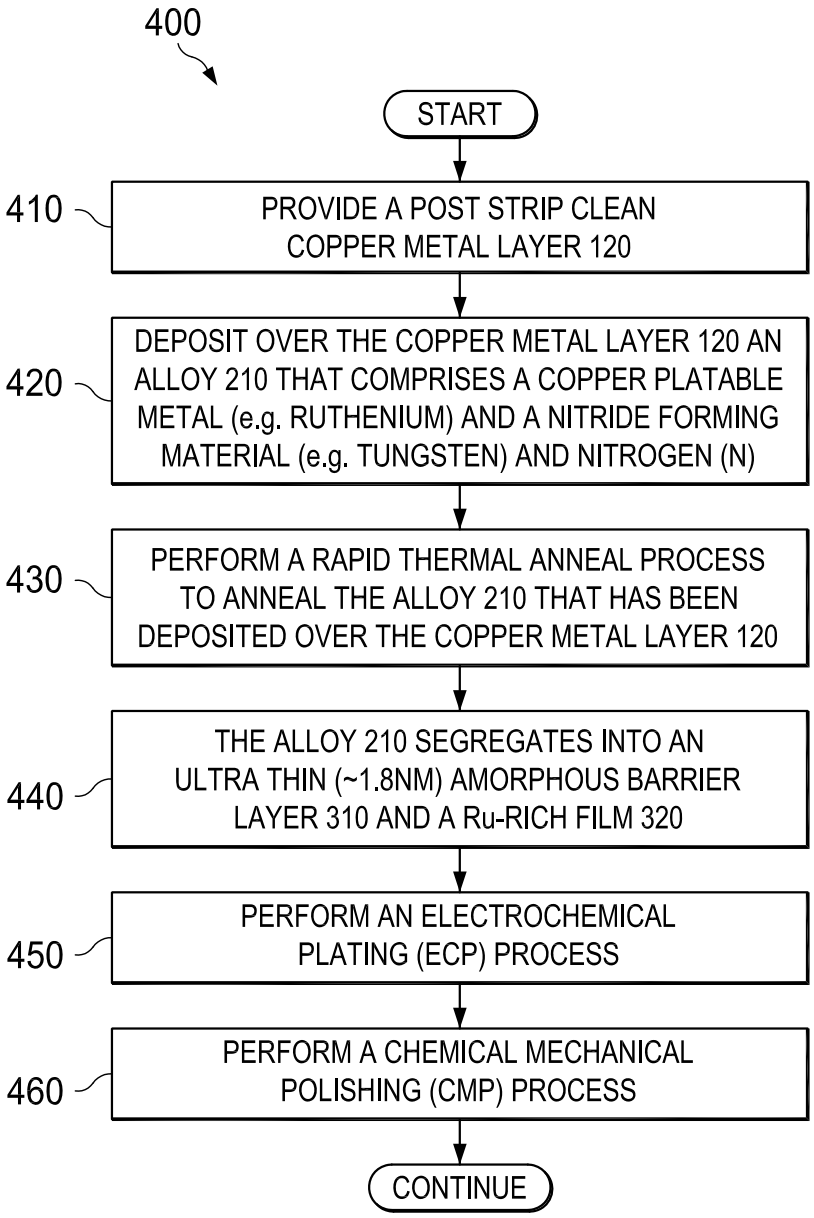
400
START
410
PROVIDE A POST STRIP CLEAN COPPER METAL LAYER 120
420
DEPOSIT OVER THE COPPER METAL LAYER 120 AN ALLOY 210 THAT COMPRISES A COPPER PLATABLE METAL (e.g. RUTHENIUM) AND A NITRIDE FORMING MATERIAL (e.g. TUNGSTEN) AND NITROGEN (N)
430
PERFORM A RAPID THERMAL ANNEAL PROCESS TO ANNEAL THE ALLOY 210 THAT HAS BEEN DEPOSITED OVER THE COPPER METAL LAYER 120
440
THE ALLOY 210 SEGREGATES INTO AN ULTRA THIN (~1.8NM) AMORPHOUS BARRIER LAYER 310 AND A Ru-RICH FILM 320
450
PERFORM AN ELECTROCHEMICAL PLATING (ECP) PROCESS
460
PERFORM A CHEMICAL MECHANICAL POLISHING (CMP) PROCESS
CONTINUE

FIG. 4

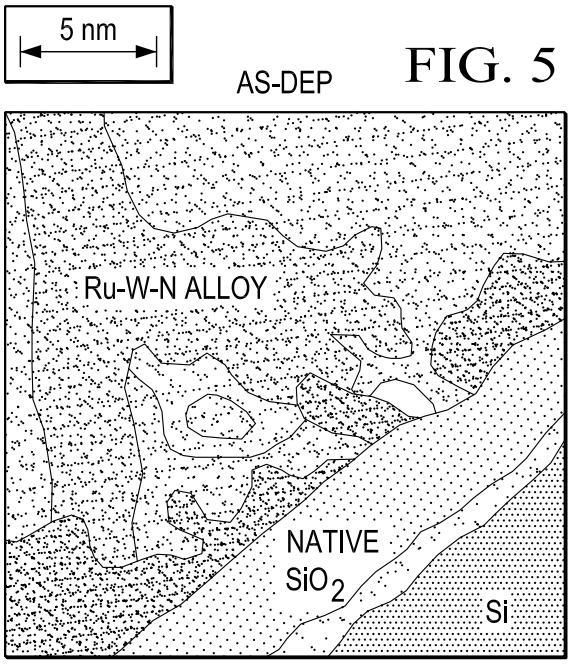

FIG. 5

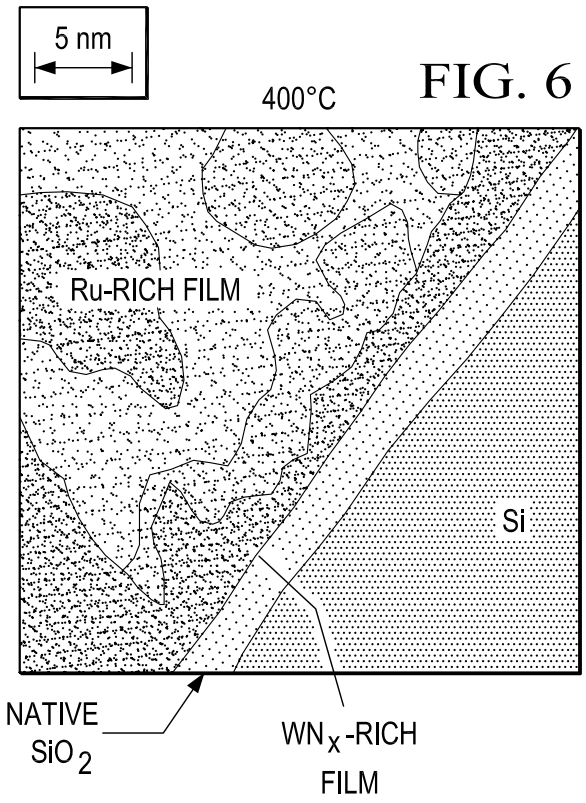

FIG. 6

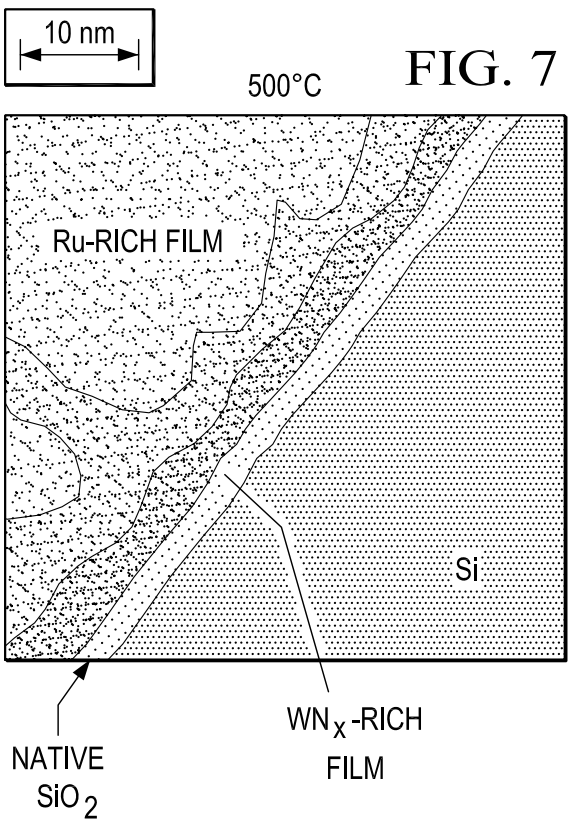

FIG. 7

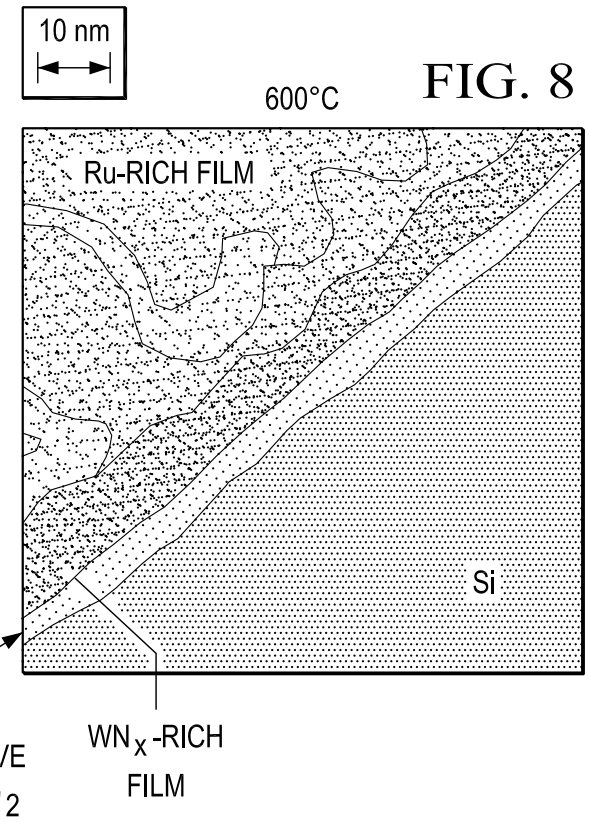

FIG. 8

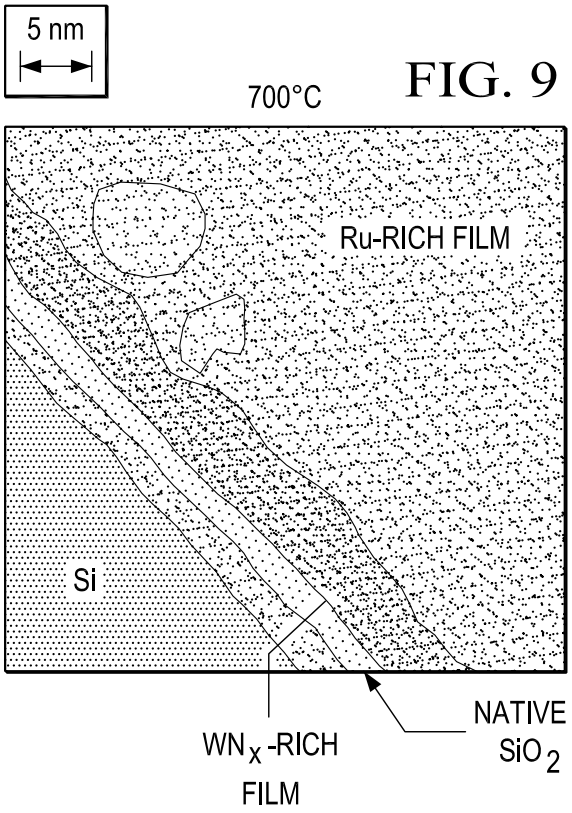

FIG. 9

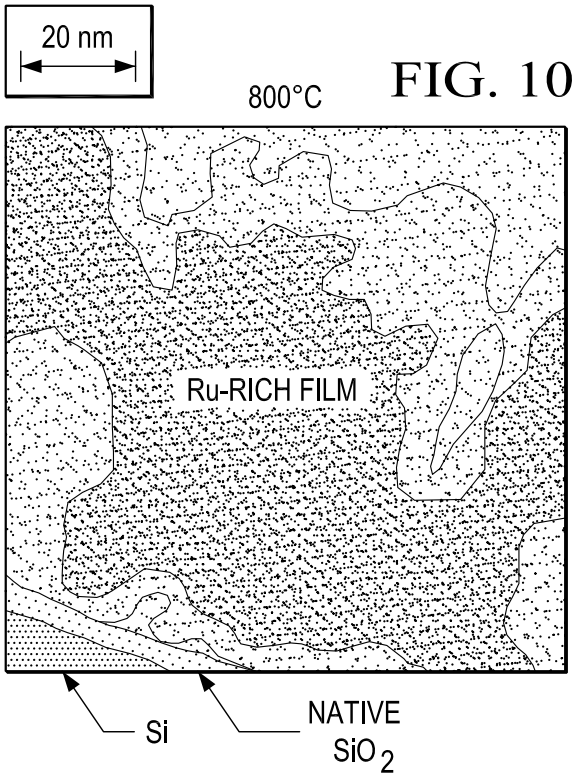

FIG. 10

TEM BRIGHT FIELD MICROGRAPH
OF Ru-W-N FILM ON Si SUBSTRATE
AFTER ANNEALING @400°C

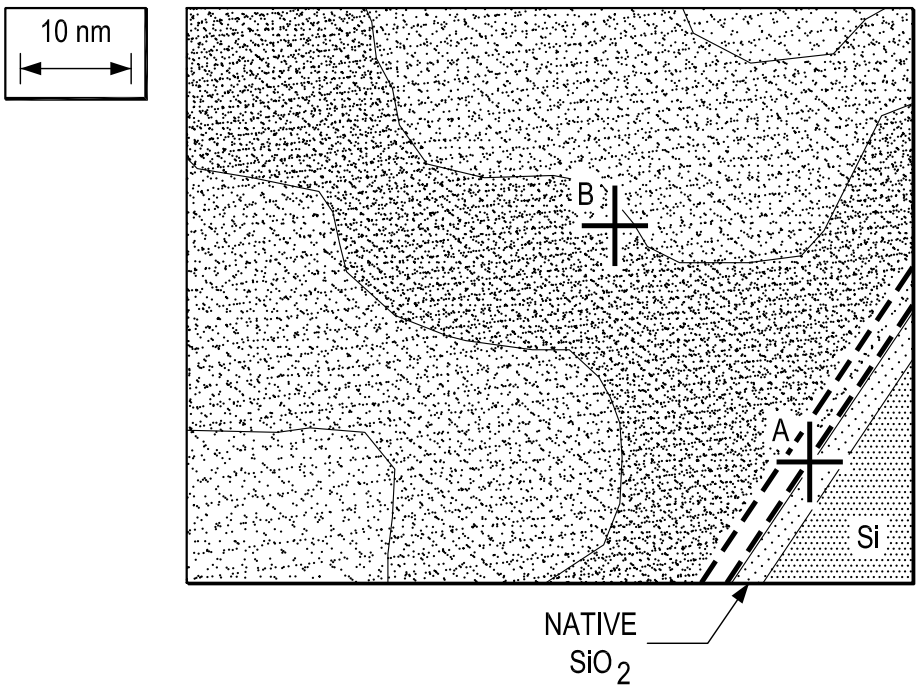

FIG. 11

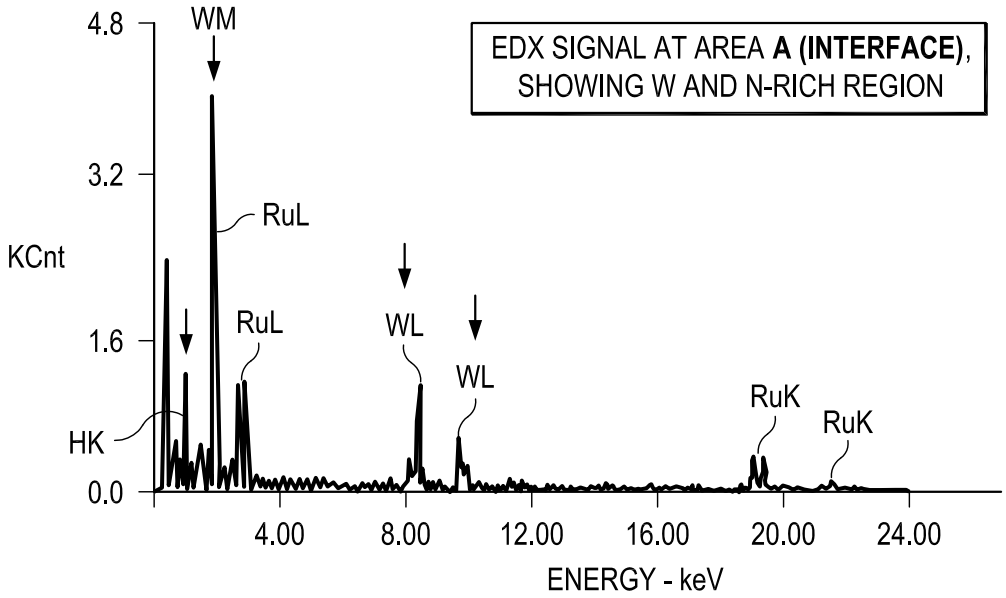
EDX SIGNAL AT AREA **A (INTERFACE)**, SHOWING W AND N-RICH REGION
4.8
3.2
1.6
0.0
KCnt
WM
RuL
RuL
WL
WL
HK
RuK
RuK
4.00
8.00
12.00
16.00
20.00
24.00
ENERGY - keV

FIG. 12

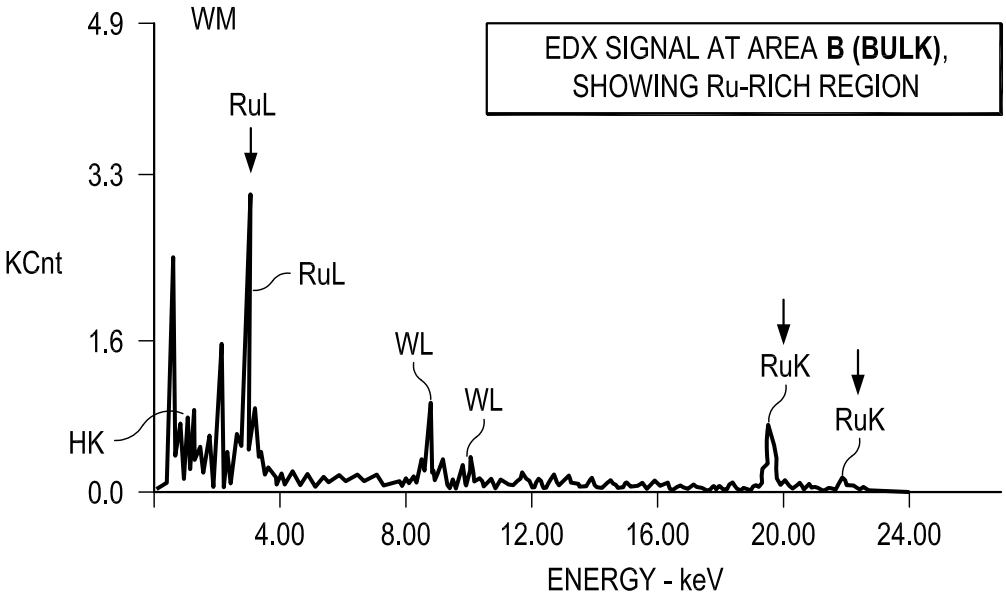
EDX SIGNAL AT AREA **B (BULK)**, SHOWING Ru-RICH REGION
4.9
3.3
1.6
0.0
KCnt
WM
RuL
RuL
WL
WL
HK
RuK
RuK
4.00
8.00
12.00
16.00
20.00
24.00
ENERGY - keV

FIG. 13