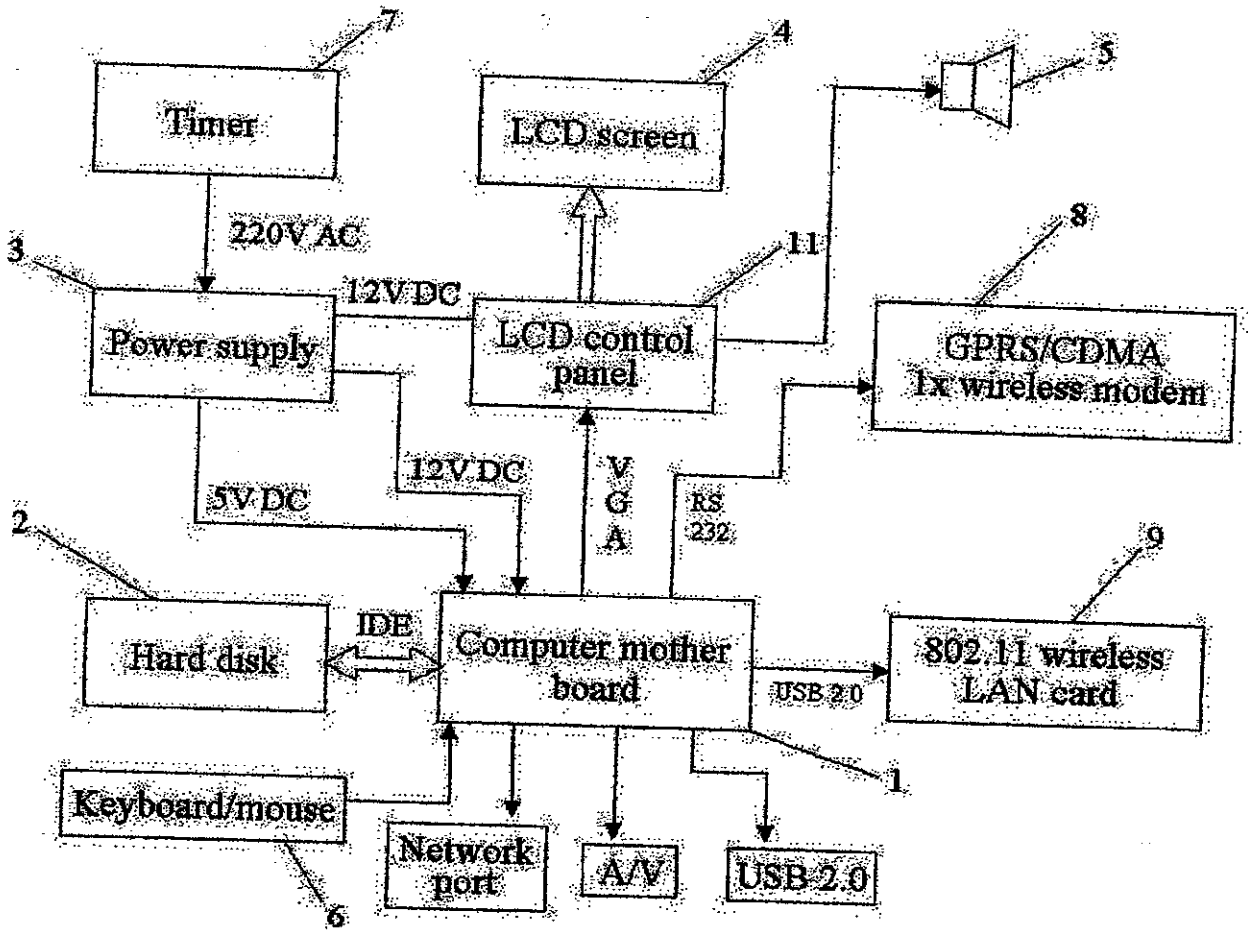
7
Timer
4
LCD screen
5
220V AC
3
12V DC
Power supply
LCD control panel
11
8
GPRS/CDMA 1x wireless modem
12V DC
5V DC
V
G
A
RS 232
2
9
Hard disk
IDE
Computer mother board
USB 2.0
802.11 wireless LAN card
1
Keyboard/mouse
Network port
A/V
USB 2.0
6

Fig. 1

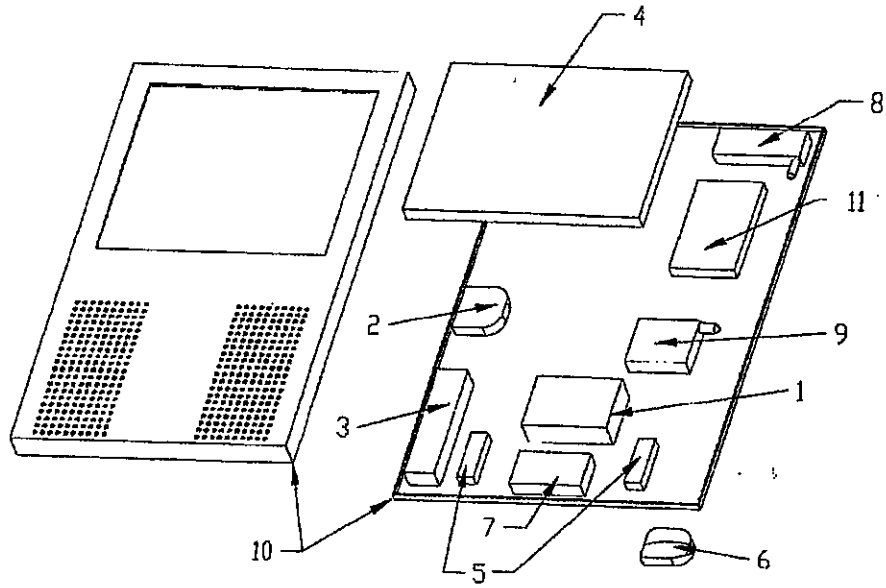

Fig. 2