[Fig. 1A]

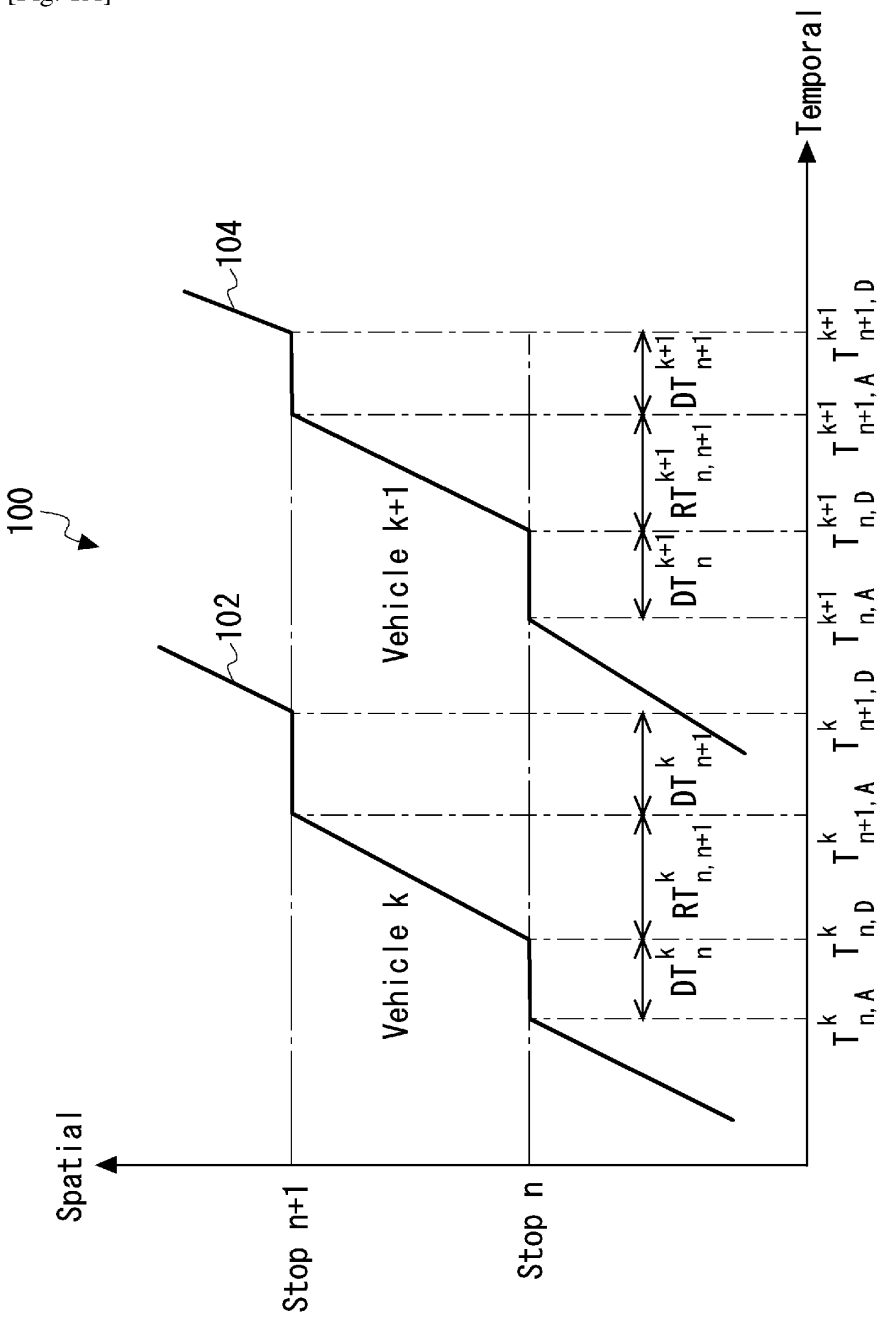
100
102
104
Spatial
Temporal
Stop n+1
Stop n
Vehicle k
Vehicle k+1
DT_n^k
$RT_{n,n+1}^k$
DT_{n+1}^k
DT_n^{k+1}
$RT_{n,n+1}^{k+1}$
DT_{n+1}^{k+1}
$T_{n,A}^k$
$T_{n,D}^k$
$T_{n+1,A}^k$
$T_{n+1,D}^k$
$T_{n,A}^{k+1}$
$T_{n,D}^{k+1}$
$T_{n+1,A}^{k+1}$
$T_{n+1,D}^{k+1}$

Fig. 1A

[Fig. 1B]

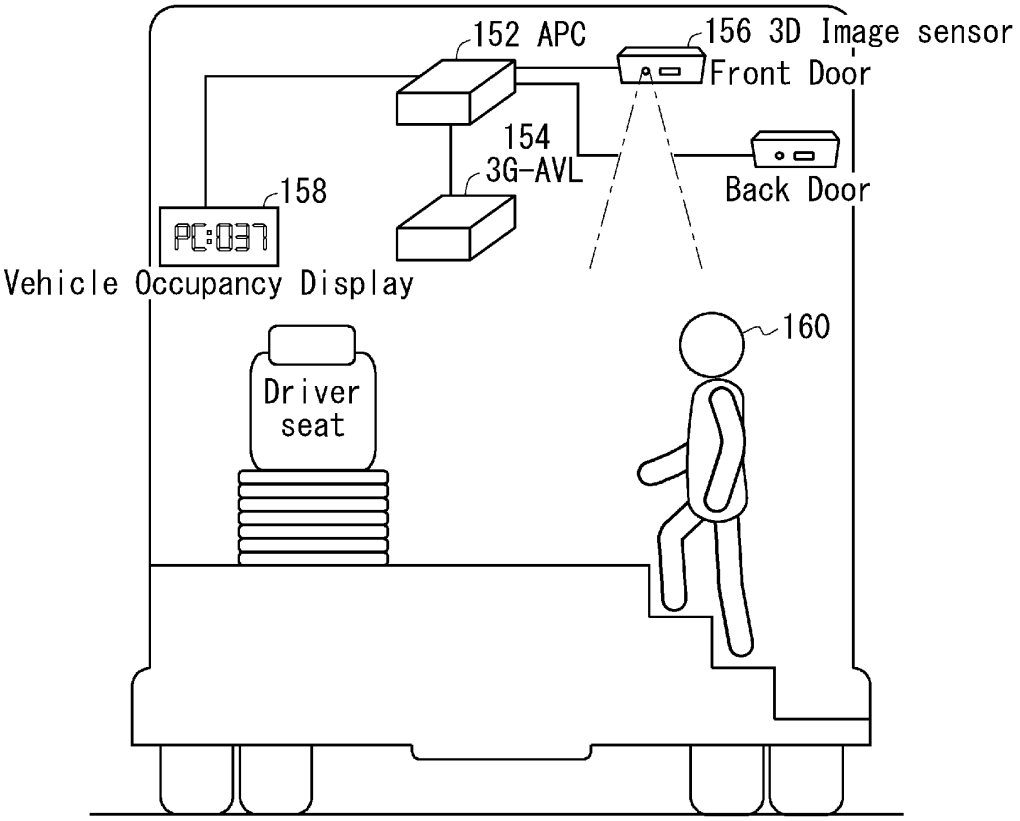
152 APC
156 3D Image sensor
Front Door
154
3G-AVL
Back Door
158
PC:037
Vehicle Occupancy Display
160
Driver
seat

Fig. 1B

[Fig. 2]

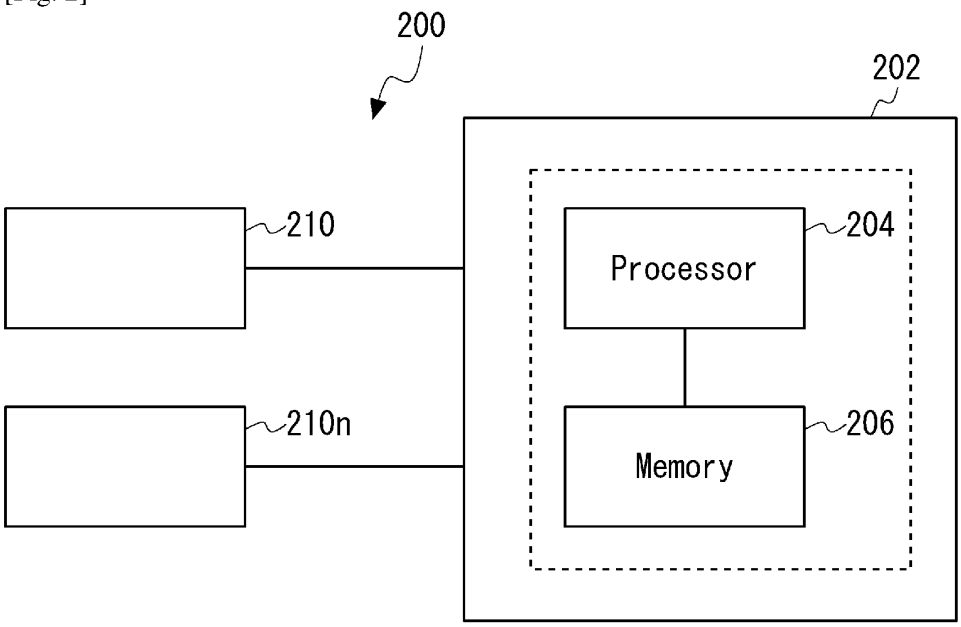

Fig. 2

[Fig. 3]

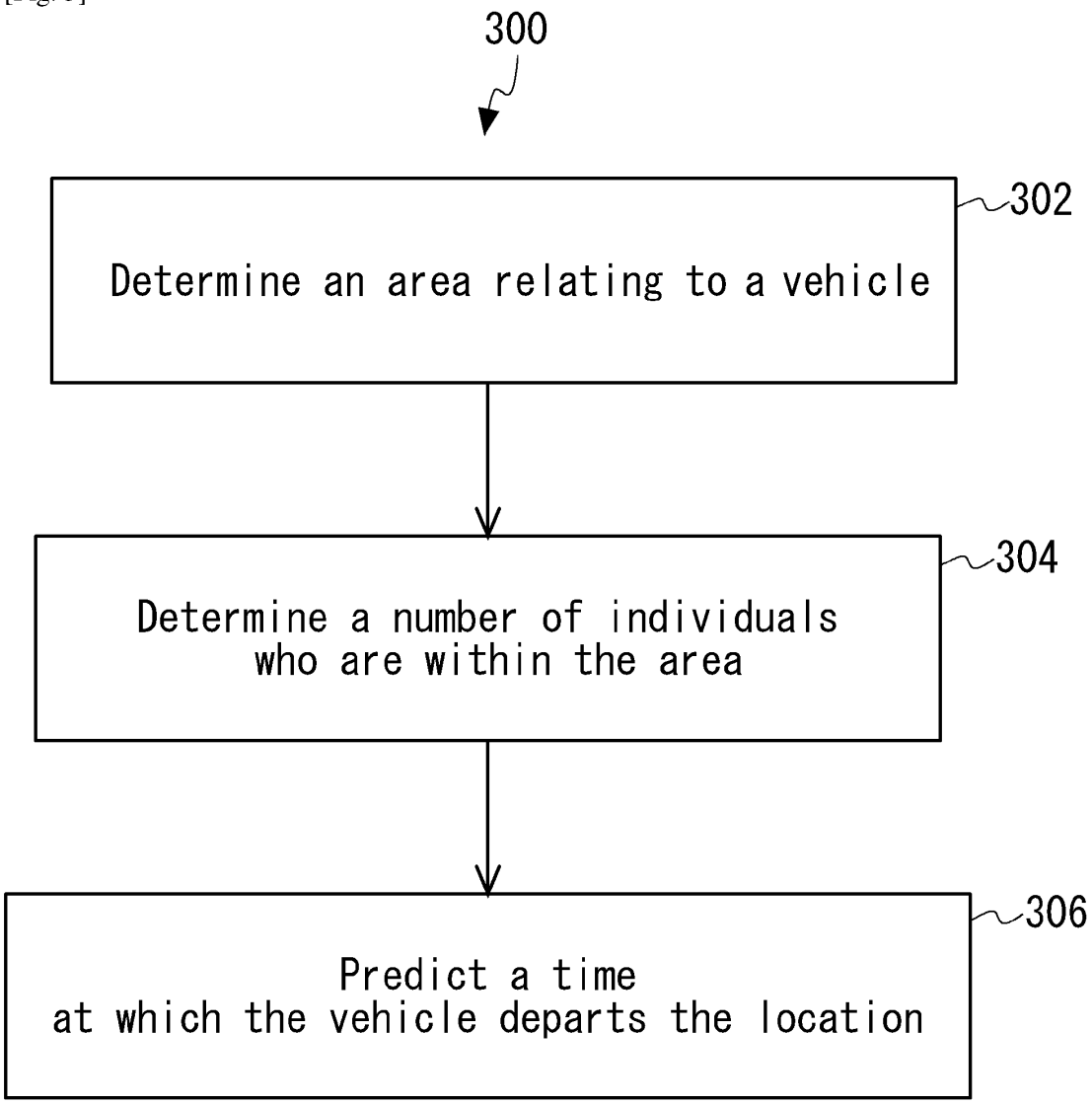
300
302
Determine an area relating to a vehicle
304
Determine a number of individuals who are within the area
306
Predict a time at which the vehicle departs the location

Fig. 3

[Fig. 4A]

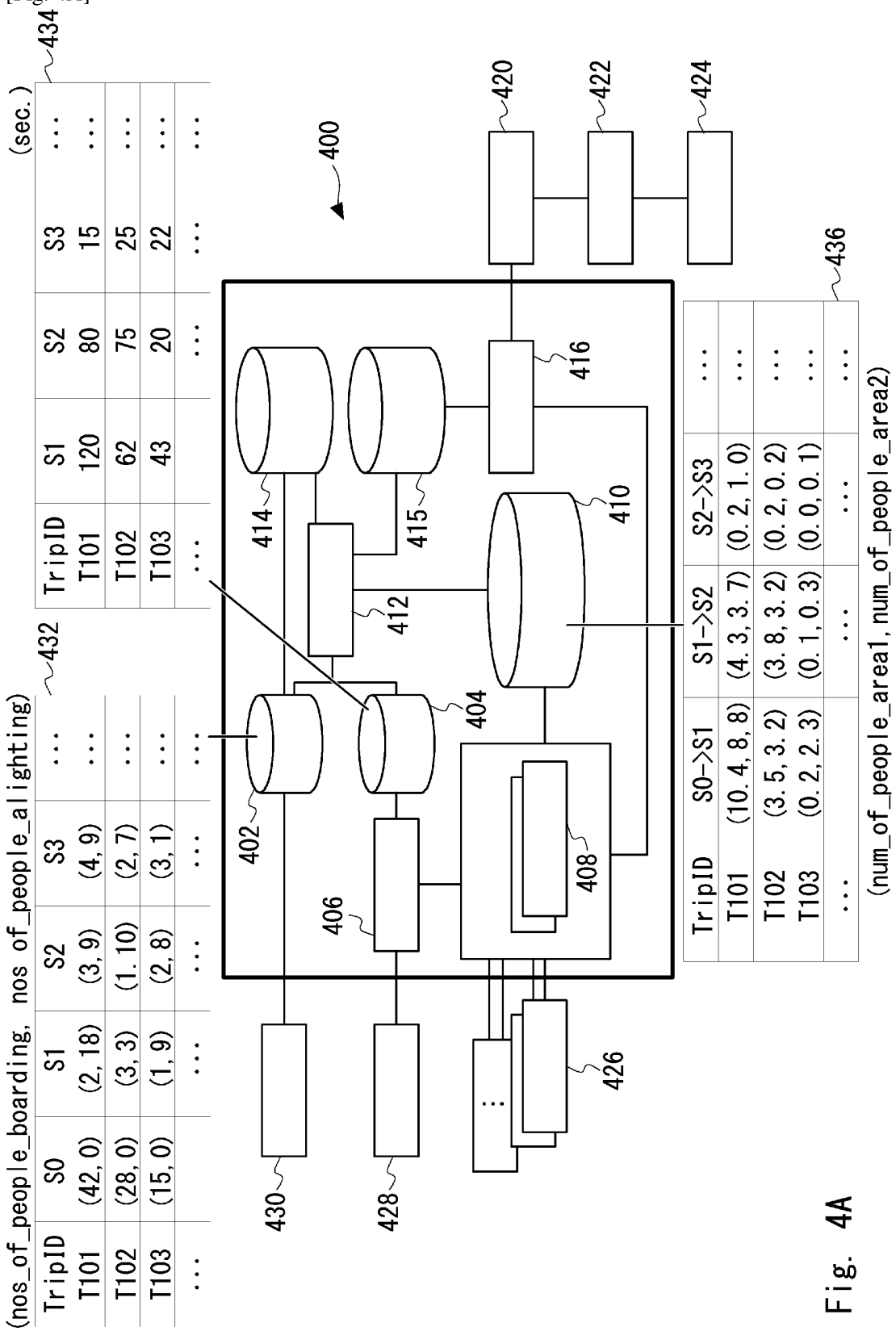
(nos_of_people_boarding, nos_of_people_alighting)
TripID S0 S1 S2 S3 ...
T101 (42, 0) (2, 18) (3, 9) (4, 9) ...
T102 (28, 0) (3, 3) (1, 10) (2, 7) ...
T103 (15, 0) (1, 9) (2, 8) (3, 1) ...
... ...
432
(sec.)
TripID S1 S2 S3 ...
T101 120 80 15 ...
T102 62 75 25 ...
T103 43 20 22 ...
... ...
434
400
402
404
406
408
410
412
414
415
416
420
422
424
426
428
430
TripID S0->S1 S1->S2 S2->S3 ...
T101 (10.4, 8, 8) (4.3, 3.7) (0.2, 1.0) ...
T102 (3.5, 3.2) (3.8, 3.2) (0.2, 0.2) ...
T103 (0.2, 2.3) (0.1, 0.3) (0.0, 0.1) ...
... ...
436
(num_of_people_area1, num_of_people_area2)

Fig. 4A

[Fig. 4B]

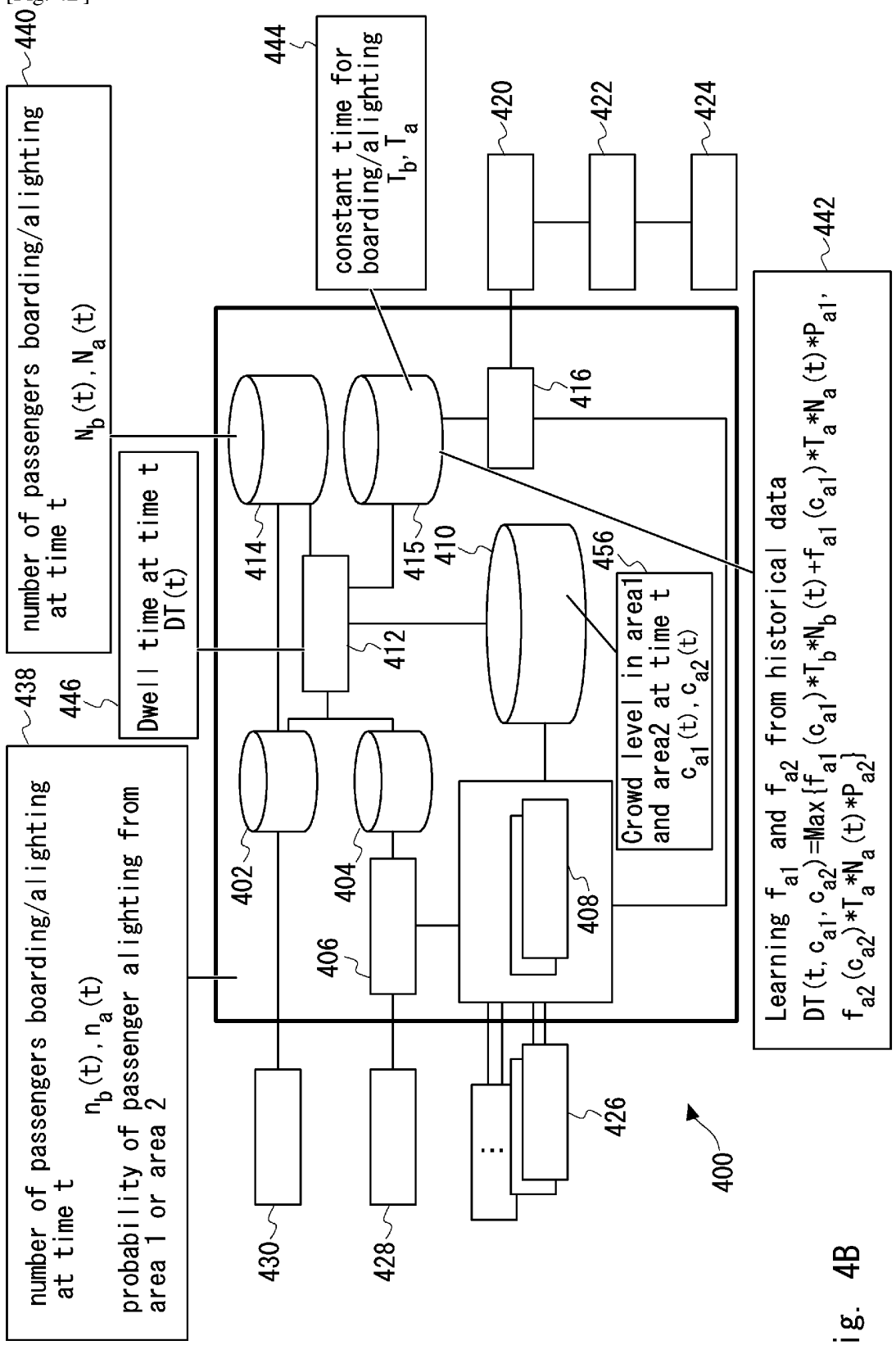
440
number of passengers boarding/alighting at time t
$N_b(t), N_a(t)$
444
constant time for boarding/alighting
T_b, T_a
420
422
424
442
Learning f_{a1} and f_{a2} from historical data
$DT(t, c_{a1}, c_{a2}) = Max\{f_{a1}(c_{a1})*T_b*N_b(t)+f_{a1}(c_{a1})*T_a*N_a(t)*P_{a1},$
$f_{a2}(c_{a2})*T_a*N_a(t)*P_{a2}\}$
416
414
415
410
456
Crowd level in area1 and area2 at time t
$c_{a1}(t), c_{a2}(t)$
412
446
Dwell time at time t
DT(t)
438
number of passengers boarding/alighting at time t
$n_b(t), n_a(t)$
probability of passenger alighting from area 1 or area 2
402
404
406
408
430
428
426
400

Fig. 4B

[Fig. 4C]

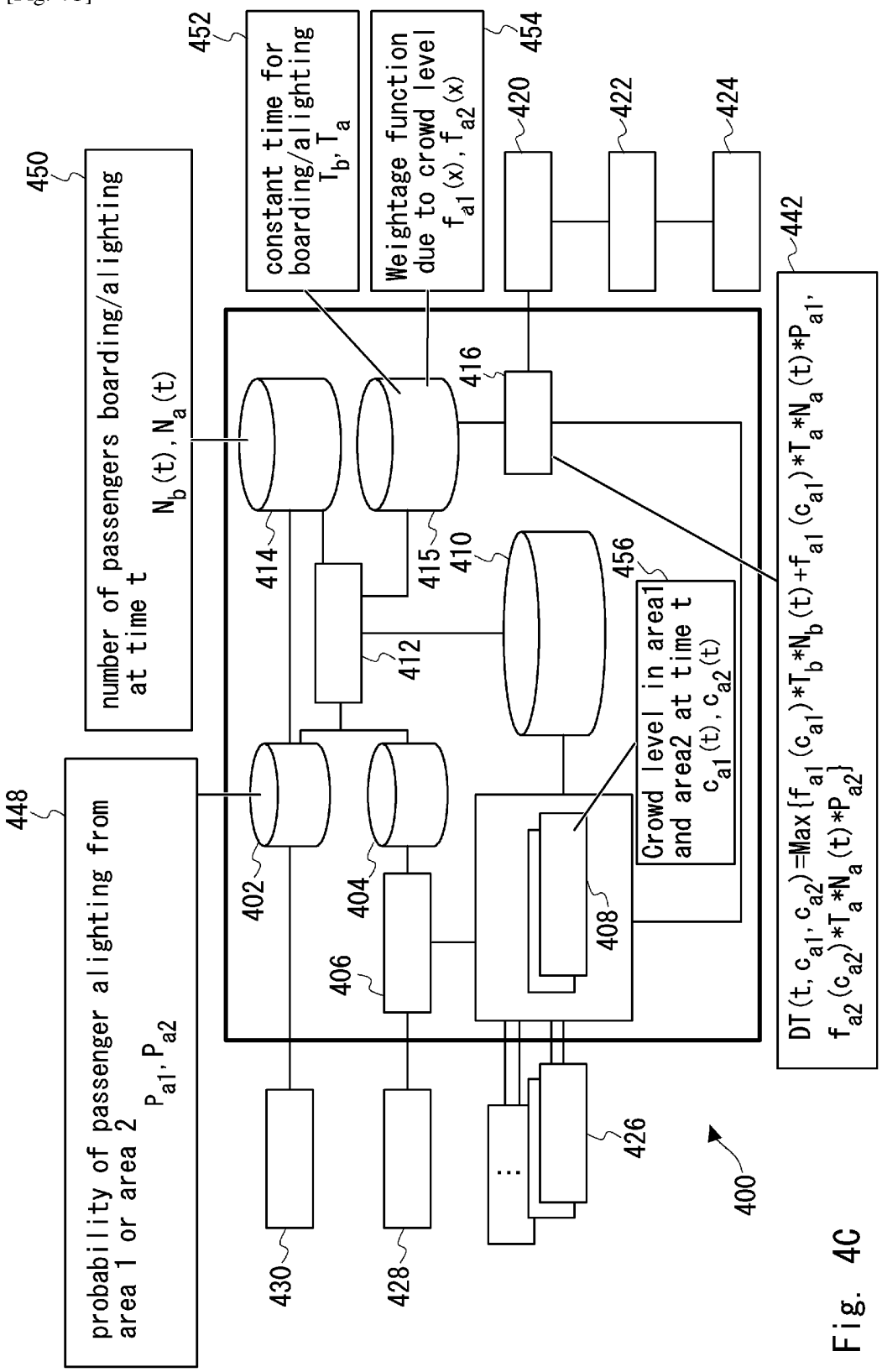
450
number of passengers boarding/alighting at time t
$N_b(t), N_a(t)$
452
constant time for boarding/alighting
T_b, T_a
454
Weightage function due to crowd level
$f_{a1}(x), f_{a2}(x)$
420
422
424
442
$DT(t, c_{a1}, c_{a2}) = Max\{f_{a1}(c_{a1})*T_b*N_b(t) + f_{a1}(c_{a1})*T_a*N_a(t)*P_{a1},$
$f_{a2}(c_{a2})*T_a*N_a(t)*P_{a2}\}$
416
414
415
410
456
412
Crowd level in area1 and area2 at time t
$c_{a1}(t), c_{a2}(t)$
448
probability of passenger alighting from area 1 or area 2
P_{a1}, P_{a2}
402
404
406
408
426
400
430
428

Fig. 4C

[Fig. 5]

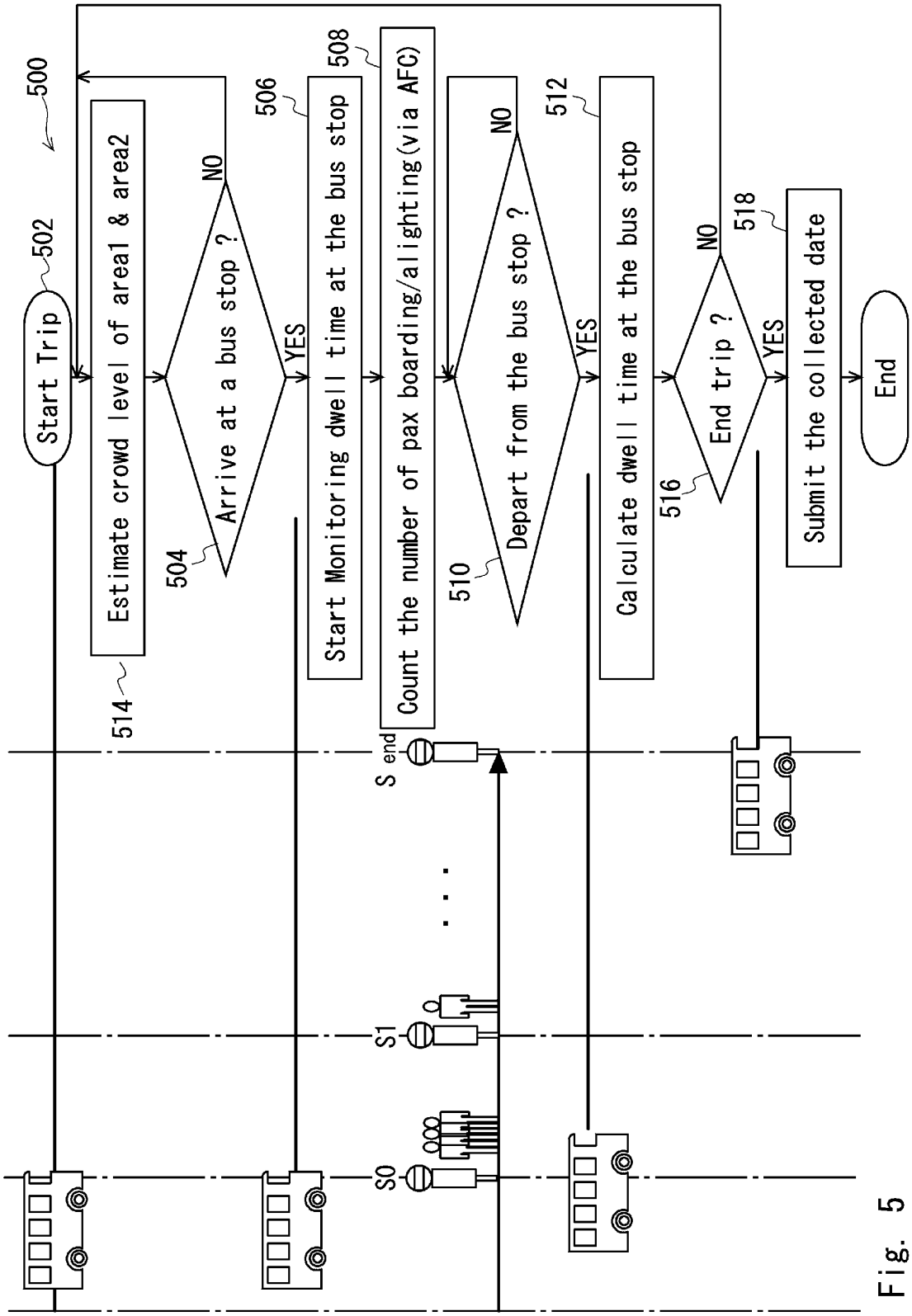
500
502
Start Trip
Estimate crowd level of area1 & area2
514
Arrive at a bus stop ?
504
NO
YES
506
Start Monitoring dwell time at the bus stop
508
Count the number of pax boarding/alighting(via AFC)
Depart from the bus stop ?
510
NO
YES
512
Calculate dwell time at the bus stop
End trip ?
516
NO
YES
518
Submit the collected date
End
S0
S1
S end

Fig. 5

[Fig. 6]

600

Common				410		402			404
index	TripID	Target bus stop ID	Timestamp	ca1: crowd level of area 1 (pax/m2)	ca2: crowd level of area 2 (pax/m2)	Number of passengers boading (pax)	Number of passenger alighting(pax)		Dwell time at the target bus stop (sec.)
							From area1	From area2	
1	T101	S1	8:02am, 4th Apr. 2017	10.4	8.8	2	2	16	120
2	T101	S2	8:13am, 4th Apr. 2017	4.3	3.7	3	0	9	80
3	T101	S3	8:28am, 4th Apr. 2017	0.2	1.0	4	0	9	15
4	T102	S1	9:32am, 4th Apr. 2017	3.5	3.2	3	0	3	62
5	T102	S2	9:40am, 4th Apr. 2017	3.8	3.2	1	3	7	75
...	...	...	...	...	...	...		...	...

P_{a1}, P_{a2} and $N_b(t), N_a(t)$ can be calculated based on historical data in 402

Fig. 6

[Fig. 7]
Example of $f_{a1}(x)$ and $f_{a2}(x)$

$$f_{a1}(x) = \begin{cases} 1 & \text{if } x < C \\ (x-C)^2+1 & \text{if } x \geqq C \end{cases}$$

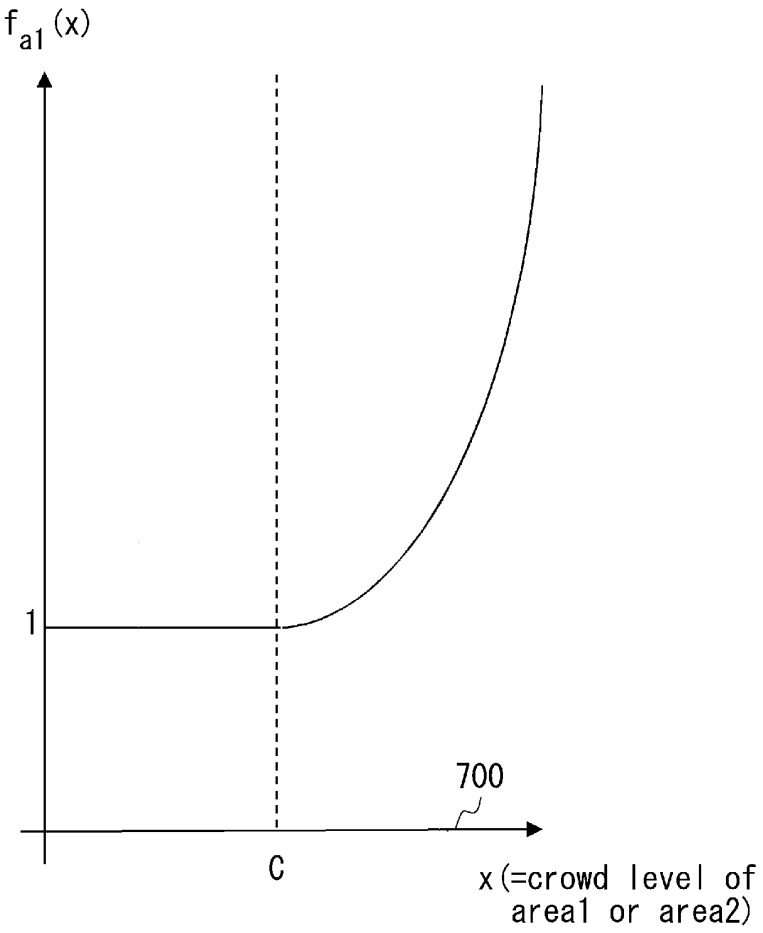

fIG. 7

[Fig. 8]

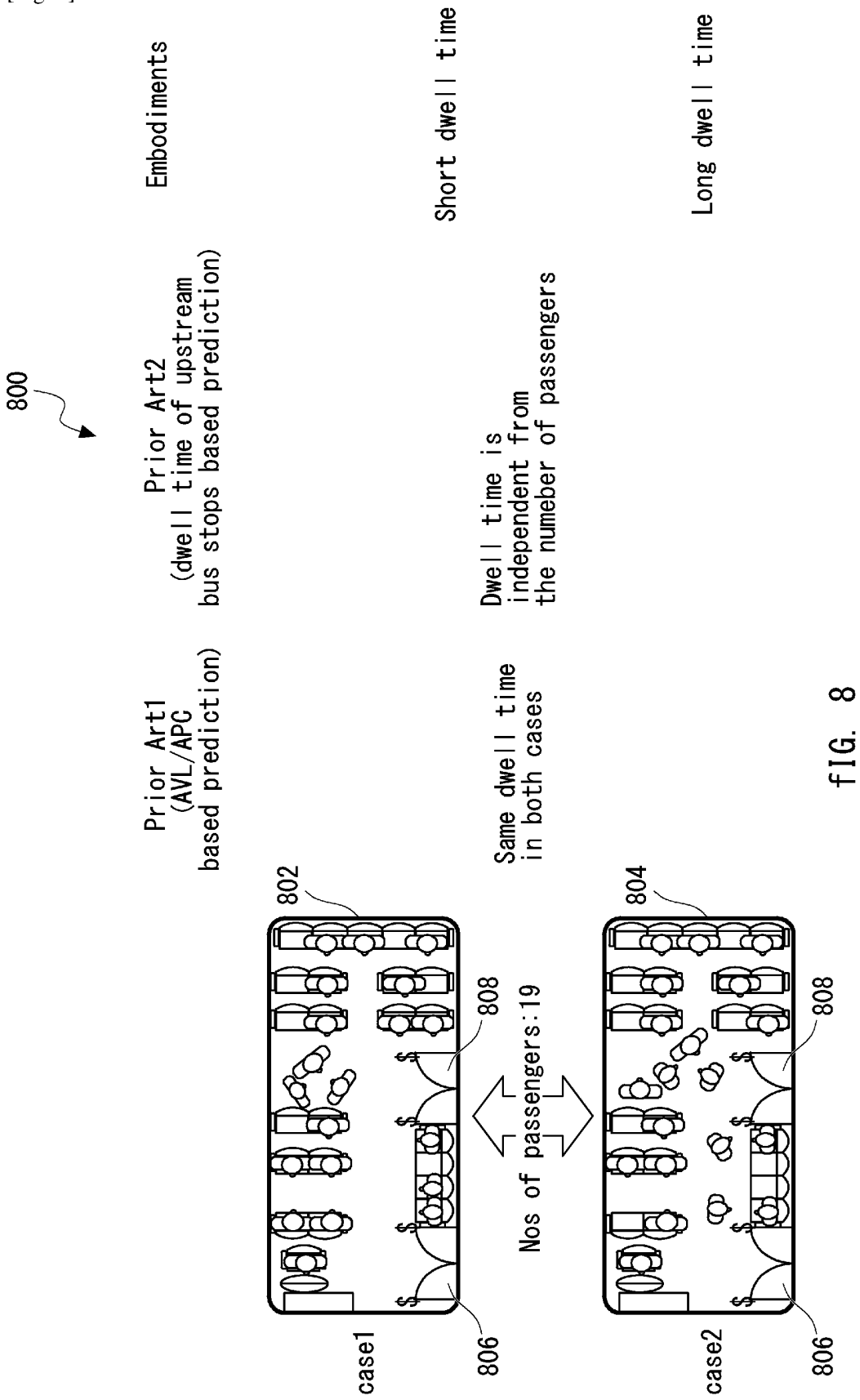
800
Prior Art1
(AVL/APC
based prediction)
Prior Art2
(dwell time of upstream
bus stops based prediction)
Embodiments
Same dwell time
in both cases
Dwell time is
independent from
the numeber of passengers
Short dwell time
Long dwell time
802
804
808
806
Nos of passengers:19
case1
case2

FIG. 8

[Fig. 9]

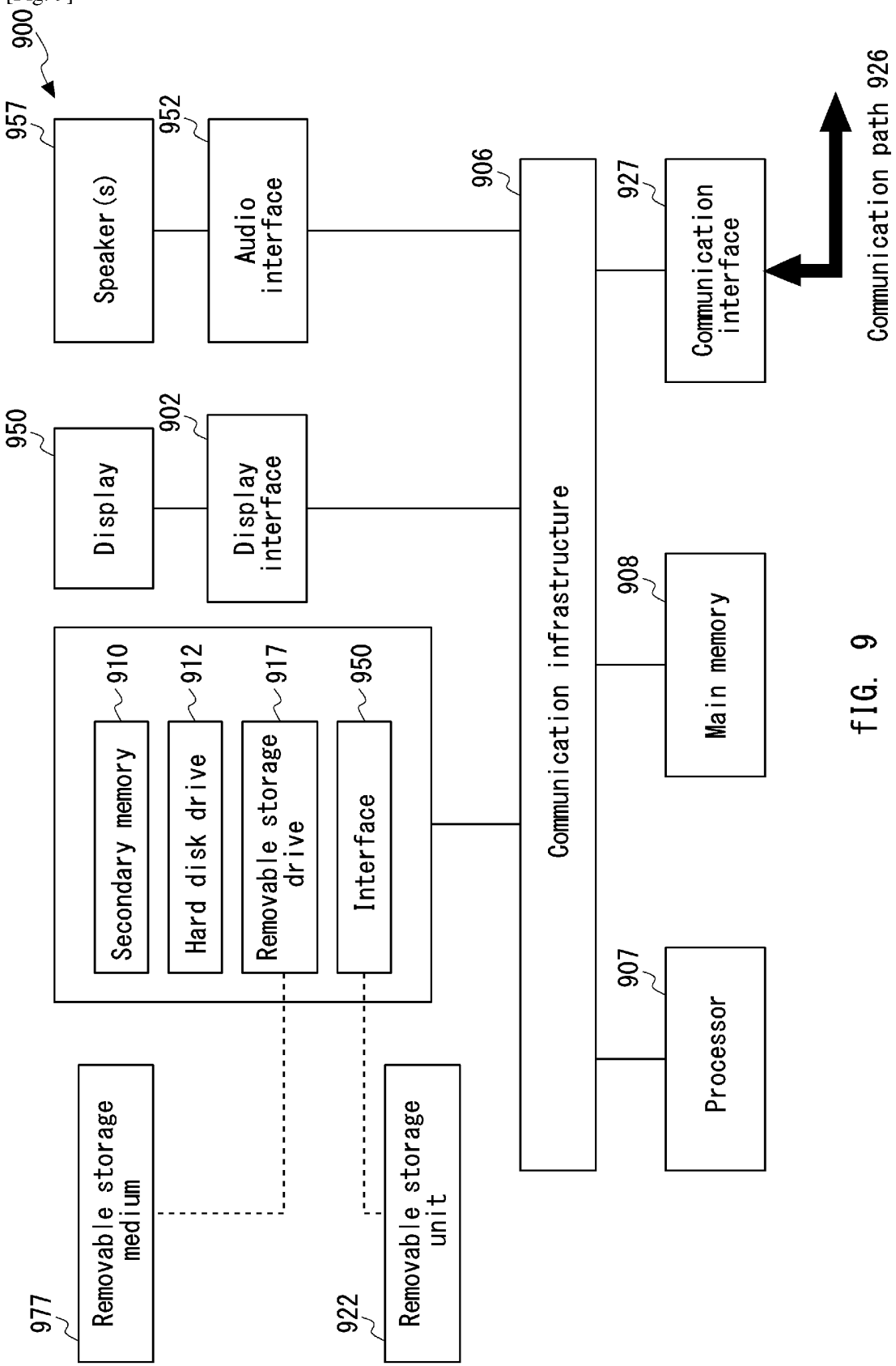
900
957
Speaker(s)
952
Audio interface
950
Display
902
Display interface
906
Communication infrastructure
927
Communication interface
Communication path 926
908
Main memory
907
Processor
910
Secondary memory
912
Hard disk drive
917
Removable storage drive
950
Interface
977
Removable storage medium
922
Removable storage unit

FIG. 9