(12) INTERNATIONAL APPLICATION PUBLISHED UNDER THE PATENT COOPERATION TREATY (PCT)

(19) World Intellectual Property Organization
International Bureau

(43) International Publication Date
15 July 2010 (15.07.2010)

PCT

(10) International Publication Number
WO 2010/080721 A1

(51) International Patent Classification:
H04B 10/148 (2006.01)

(21) International Application Number:
PCT/US2010/020005

(22) International Filing Date:
4 January 2010 (04.01.2010)

(25) Filing Language: English

(26) Publication Language: English

(30) Priority Data:
12/319,777 12 January 2009 (12.01.2009) US

(71) Applicant *(for all designated States except US)*: **ALCATEL-LUCENT USA INC.** [US/US]; 600-700 Mountain Avenue, Murray Hill, NJ 07974-0636 (US).

(72) Inventor; and

(75) Inventor/Applicant *(for US only)*: **LIU, Xiang** [US/US]; 6 Manor Drive, Marlboro, NJ 07746 (US).

(81) Designated States *(unless otherwise indicated, for every kind of national protection available)*: AE, AG, AL, AM, AO, AT, AU, AZ, BA, BB, BG, BH, BR, BW, BY, BZ, CA, CH, CL, CN, CO, CR, CU, CZ, DE, DK, DM, DO, DZ, EC, EE, EG, ES, FI, GB, GD, GE, GH, GM, GT, HN, HR, HU, ID, IL, IN, IS, JP, KE, KG, KM, KN, KP, KR, KZ, LA, LC, LK, LR, LS, LT, LU, LY, MA, MD, ME, MG, MK, MN, MW, MX, MY, MZ, NA, NG, NI, NO, NZ, OM, PE, PG, PH, PL, PT, RO, RS, RU, SC, SD, SE, SG, SK, SL, SM, ST, SV, SY, TH, TJ, TM, TN, TR, TT, TZ, UA, UG, US, UZ, VC, VN, ZA, ZM, ZW.

(84) Designated States *(unless otherwise indicated, for every kind of regional protection available)*: ARIPO (BW, GH, GM, KE, LS, MW, MZ, NA, SD, SL, SZ, TZ, UG, ZM, ZW), Eurasian (AM, AZ, BY, KG, KZ, MD, RU, TJ, TM), European (AT, BE, BG, CH, CY, CZ, DE, DK, EE, ES, FI, FR, GB, GR, HR, HU, IE, IS, IT, LT, LU, LV, MC, MK, MT, NL, NO, PL, PT, RO, SE, SI, SK, SM, TR), OAPI (BF, BJ, CF, CG, CI, CM, GA, GN, GQ, GW, ML, MR, NE, SN, TD, TG).

Published:

— *with international search report (Art. 21(3))*

WO 2010/080721 A1

(54) Title: MULTI-WAVELENGTH COHERENT RECEIVER WITH A SHARED OPTICAL HYBRID AND A MULTI-WAVELENGTH LOCAL OSCILLATOR

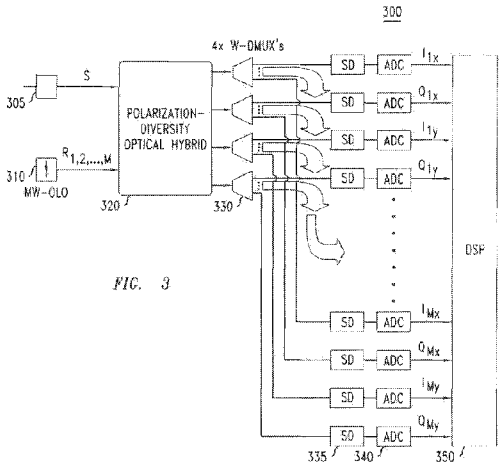

FIG. 3

(57) Abstract: An exemplary apparatus for digital coherent detection of a multi -wavelength signal includes a polarization-diversity optical hybrid, at least four Wavelength De- Multiplexing (W-DMUX) filters, 4M detectors, and 4M analog-to-digital converters (ADCs), with M an integer greater than one. The hybrid has a first input for receiving a multi -wavelength signal including M sub-channels at different wavelengths, and a second input for receiving a reference light source including M continuous-wave references at different wavelengths that approximates center wavelengths of the M sub-channels. The hybrid has at least four outputs. A W-DMUX input for each W-DMUX filter is provided a corresponding one of the hybrid outputs, and each W-DMUX filter provides M filtered optical channel outputs. Each detector converts at least one of the filtered channel outputs into a corresponding electrical signal. Each ADC converts one of the electrical signals into a corresponding digital signal. The corresponding digital signals represent the M sub-channels.