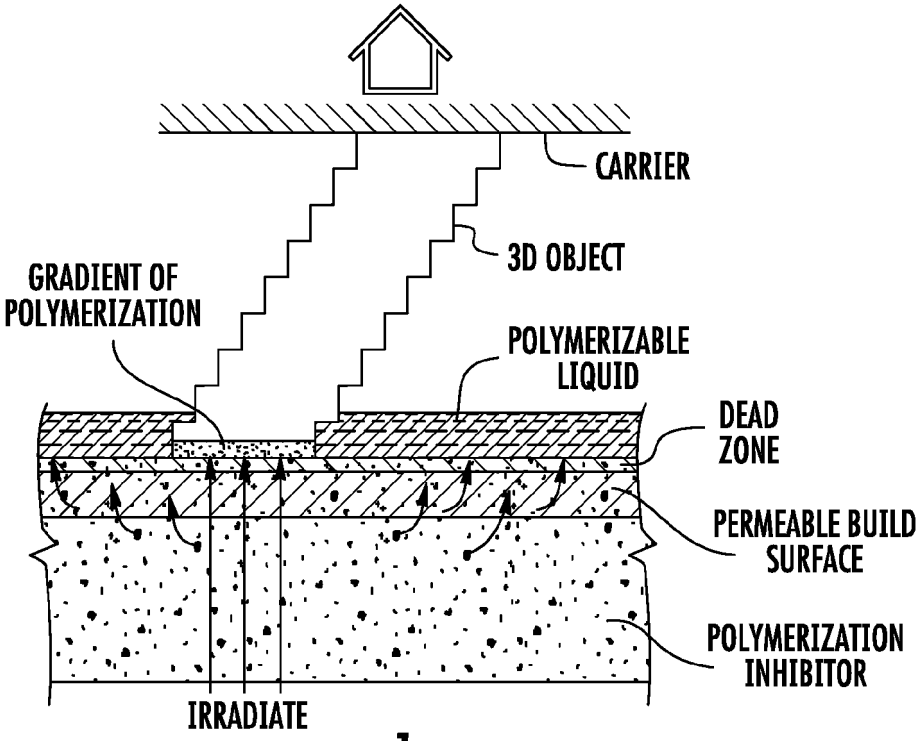
CARRIER
3D OBJECT
GRADIENT OF POLYMERIZATION
POLYMERIZABLE LIQUID
DEAD ZONE
PERMEABLE BUILD SURFACE
POLYMERIZATION INHIBITOR
IRRADIATE

FIG. 1

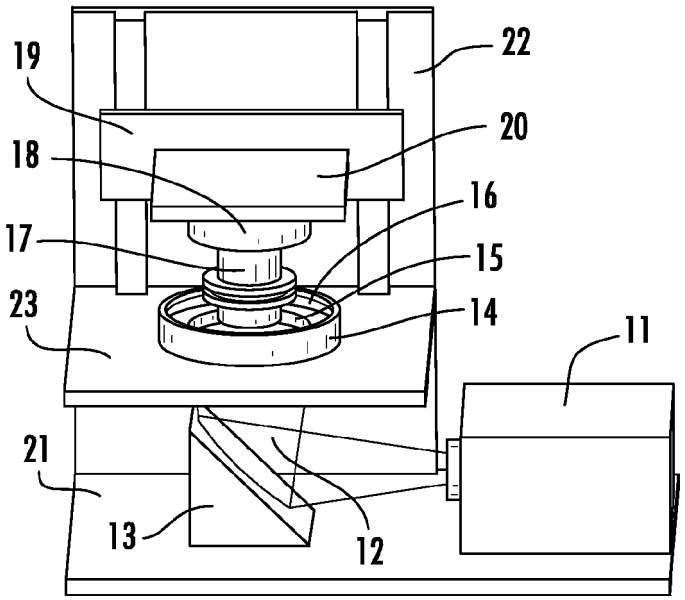
19
22
20
18
16
17
15
23
14
11
21
13
12

FIG. 2

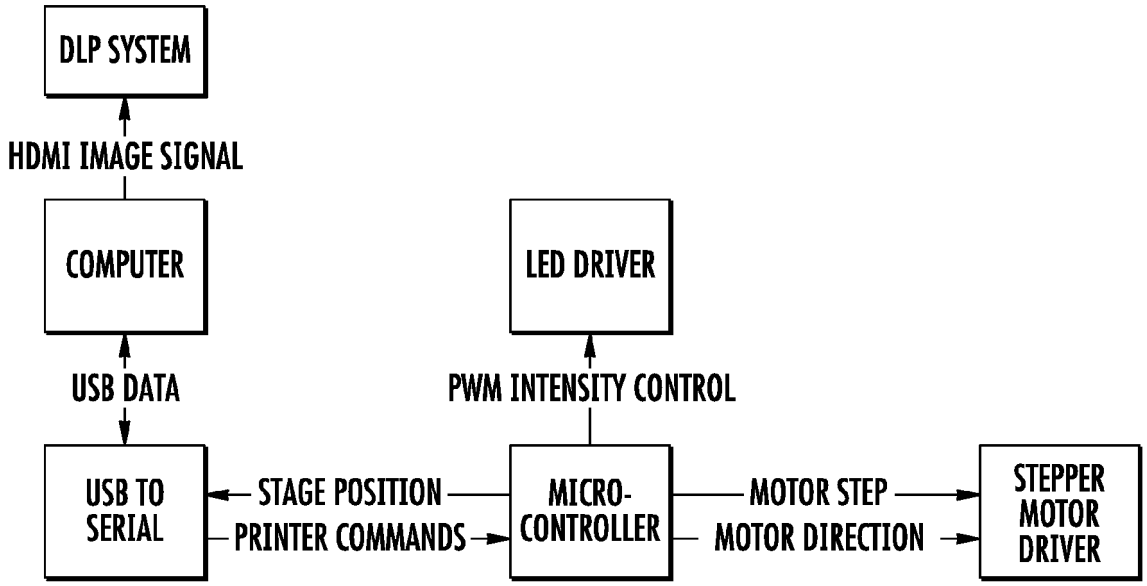
DLP SYSTEM
HDMI IMAGE SIGNAL
COMPUTER
LED DRIVER
USB DATA
PWM INTENSITY CONTROL
USB TO SERIAL
STAGE POSITION
PRINTER COMMANDS
MICRO-CONTROLLER
MOTOR STEP
MOTOR DIRECTION
STEPPER MOTOR DRIVER

FIG. 3

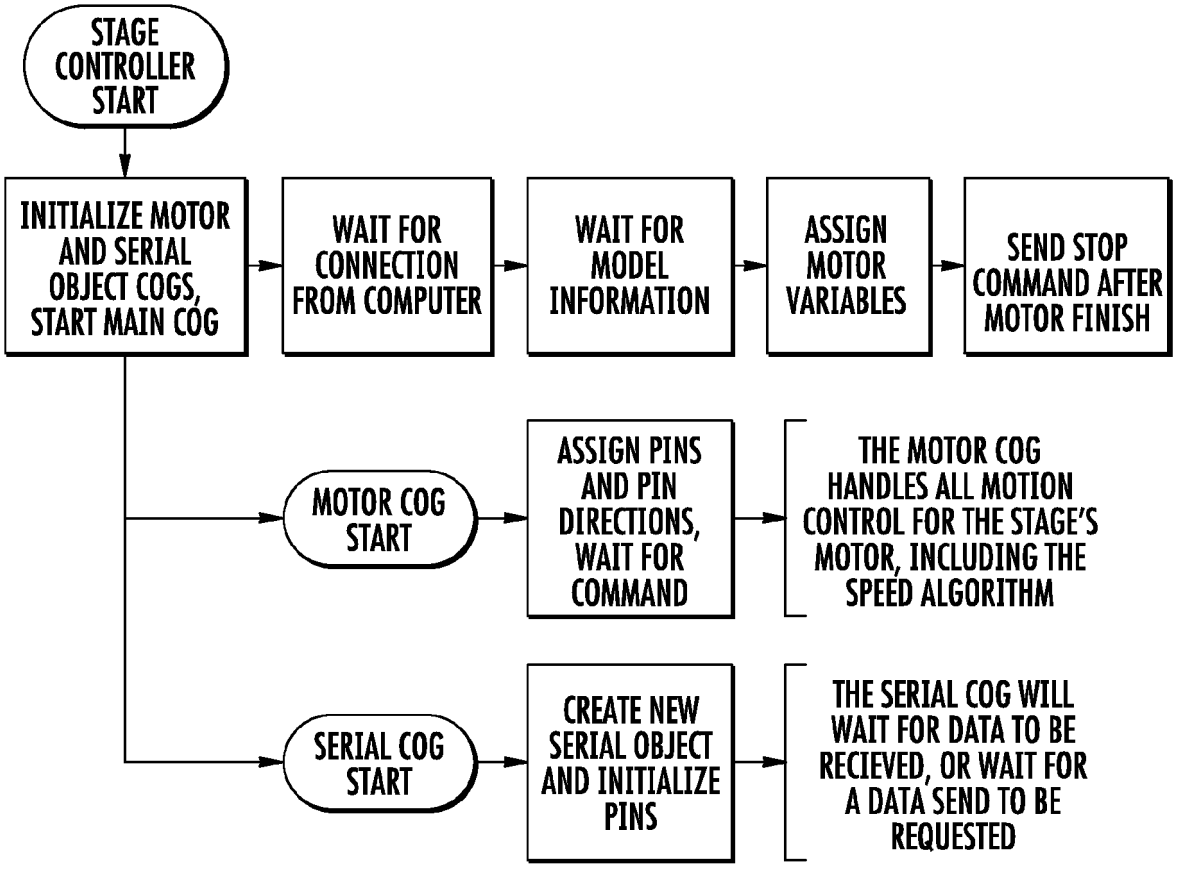
STAGE CONTROLLER START
INITIALIZE MOTOR AND SERIAL OBJECT COGS, START MAIN COG
WAIT FOR CONNECTION FROM COMPUTER
WAIT FOR MODEL INFORMATION
ASSIGN MOTOR VARIABLES
SEND STOP COMMAND AFTER MOTOR FINISH
MOTOR COG START
ASSIGN PINS AND PIN DIRECTIONS, WAIT FOR COMMAND
THE MOTOR COG HANDLES ALL MOTION CONTROL FOR THE STAGE'S MOTOR, INCLUDING THE SPEED ALGORITHM
SERIAL COG START
CREATE NEW SERIAL OBJECT AND INITIALIZE PINS
THE SERIAL COG WILL WAIT FOR DATA TO BE RECIEVED, OR WAIT FOR A DATA SEND TO BE REQUESTED

FIG. 4

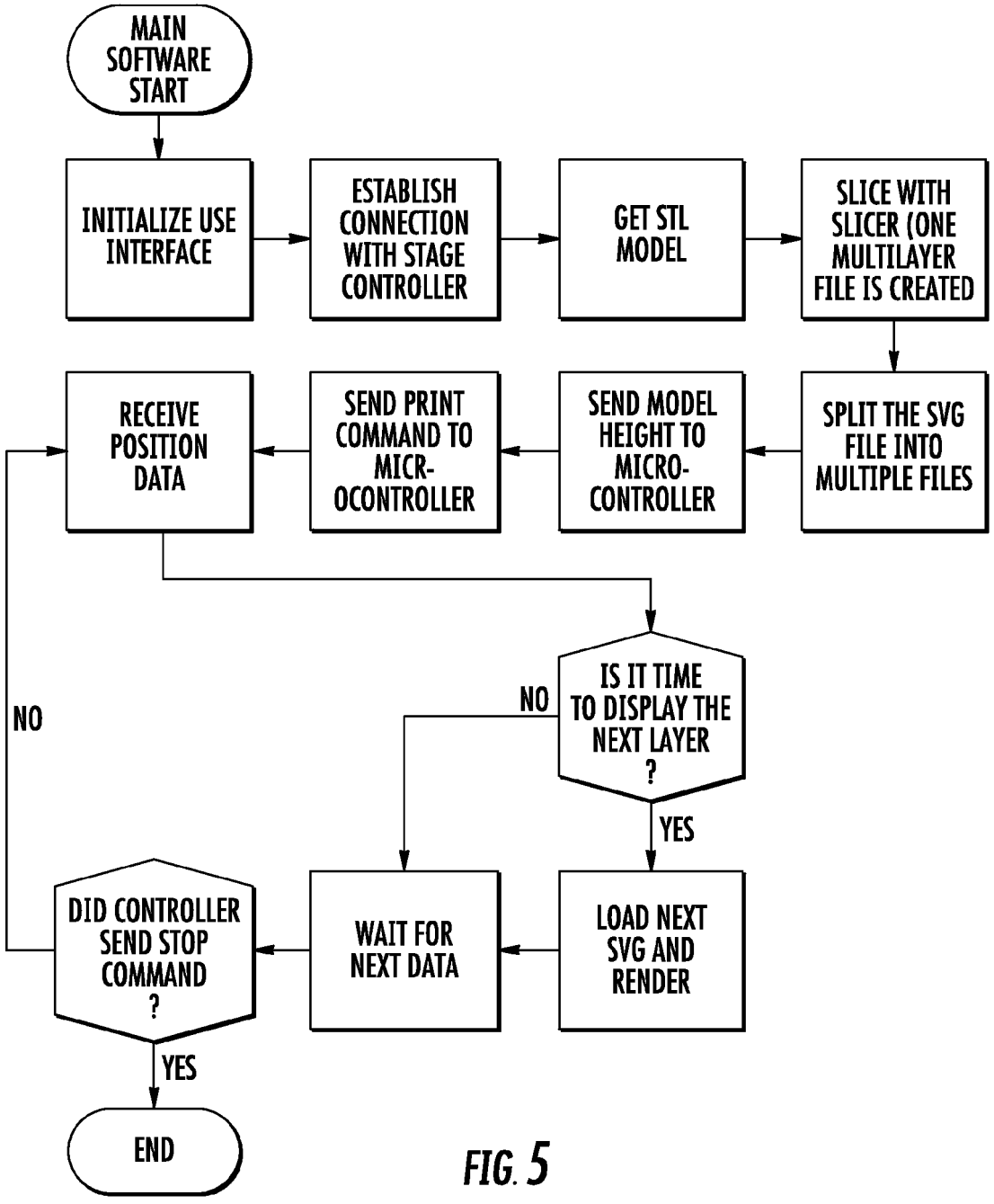
MAIN SOFTWARE START
INITIALIZE USE INTERFACE
ESTABLISH CONNECTION WITH STAGE CONTROLLER
GET STL MODEL
SLICE WITH SLICER (ONE MULTILAYER FILE IS CREATED
SPLIT THE SVG FILE INTO MULTIPLE FILES
SEND MODEL HEIGHT TO MICRO-CONTROLLER
SEND PRINT COMMAND TO MICR-OCONTROLLER
RECEIVE POSITION DATA
IS IT TIME TO DISPLAY THE NEXT LAYER ?
NO
YES
LOAD NEXT SVG AND RENDER
WAIT FOR NEXT DATA
DID CONTROLLER SEND STOP COMMAND ?
NO
YES
END

FIG. 5

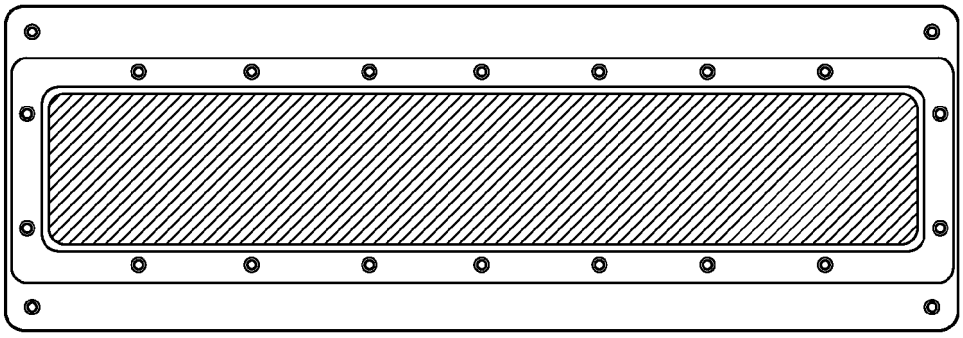

FIG. 6

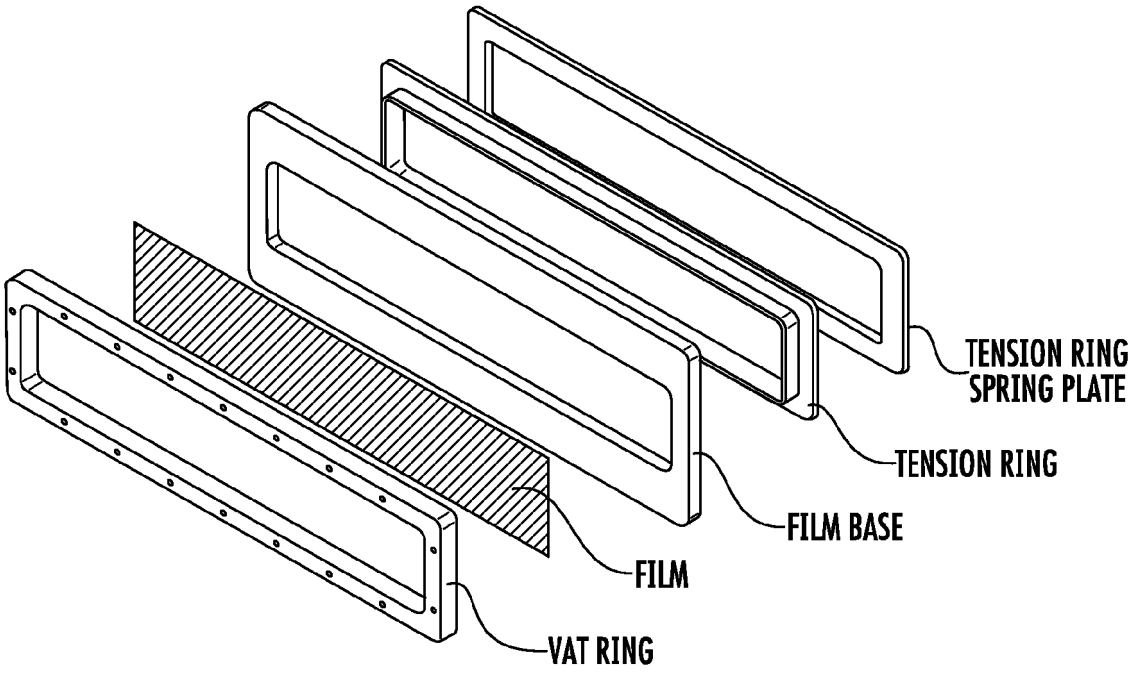
TENSION RING
SPRING PLATE
TENSION RING
FILM BASE
FILM
VAT RING

FIG. 7

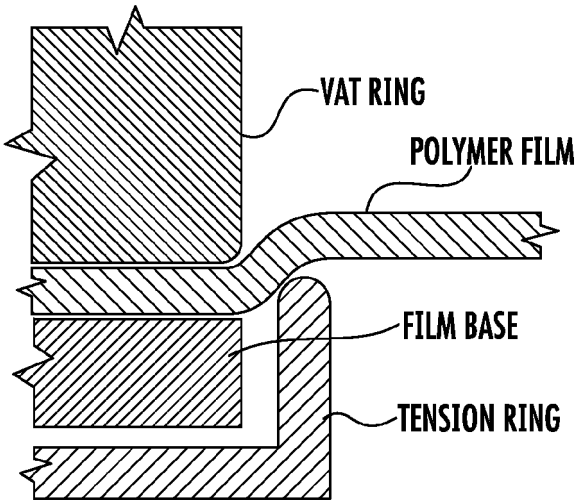

FIG. 8

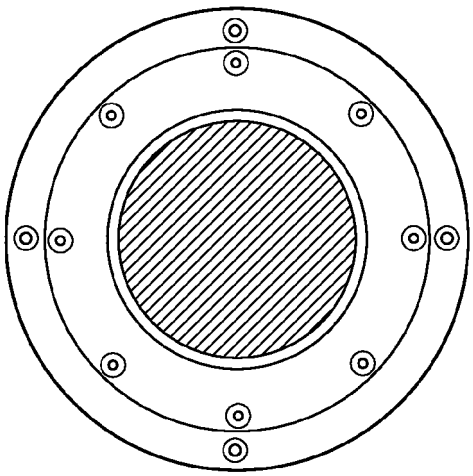

FIG. 9

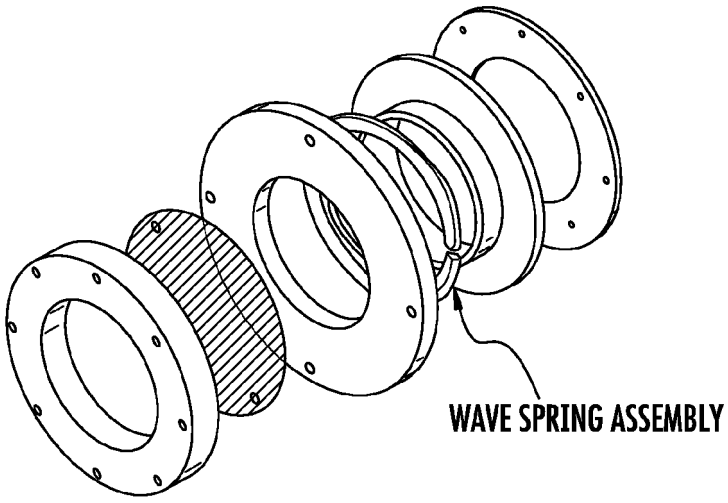

FIG. 10

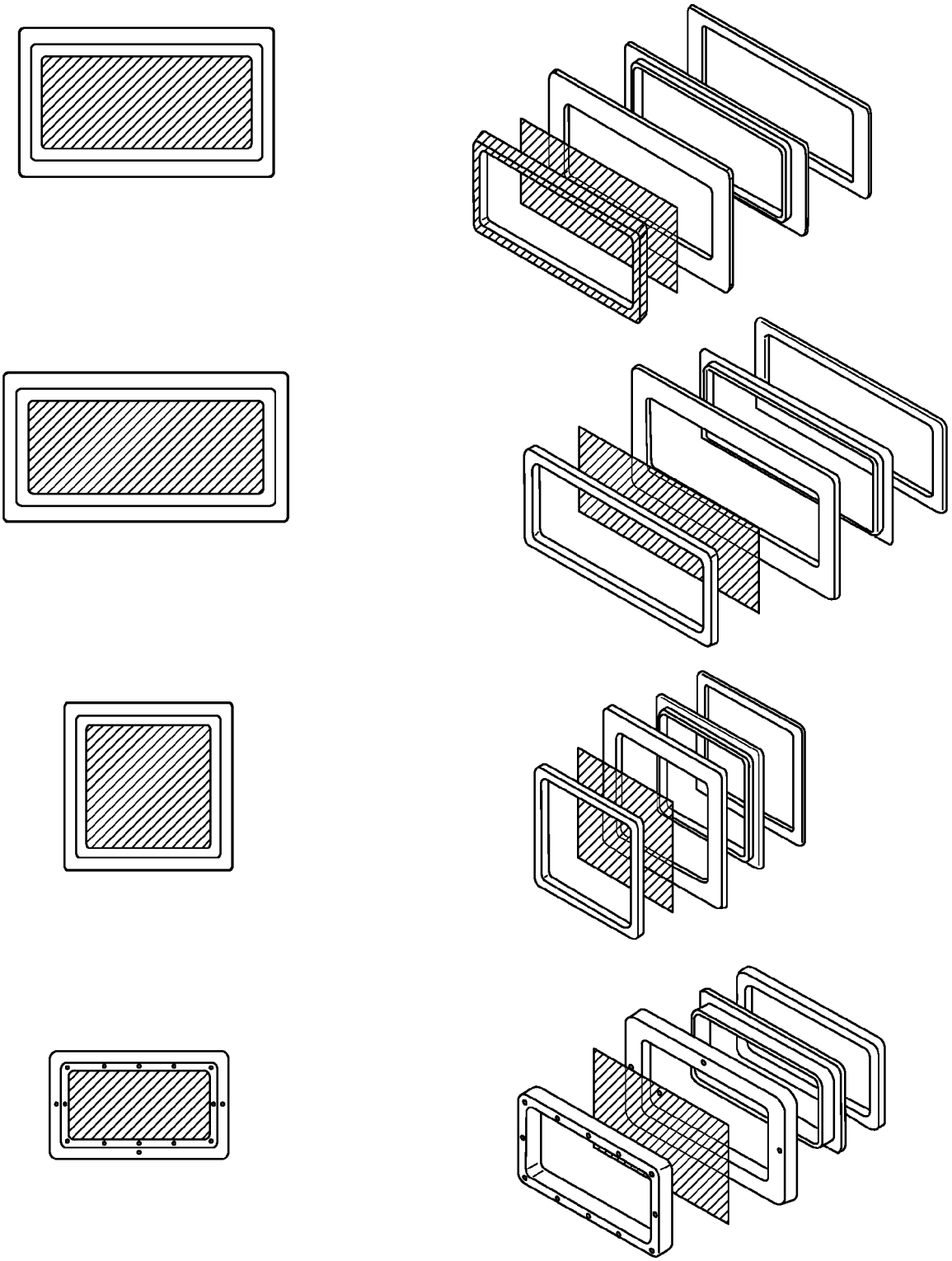

FIG. 11

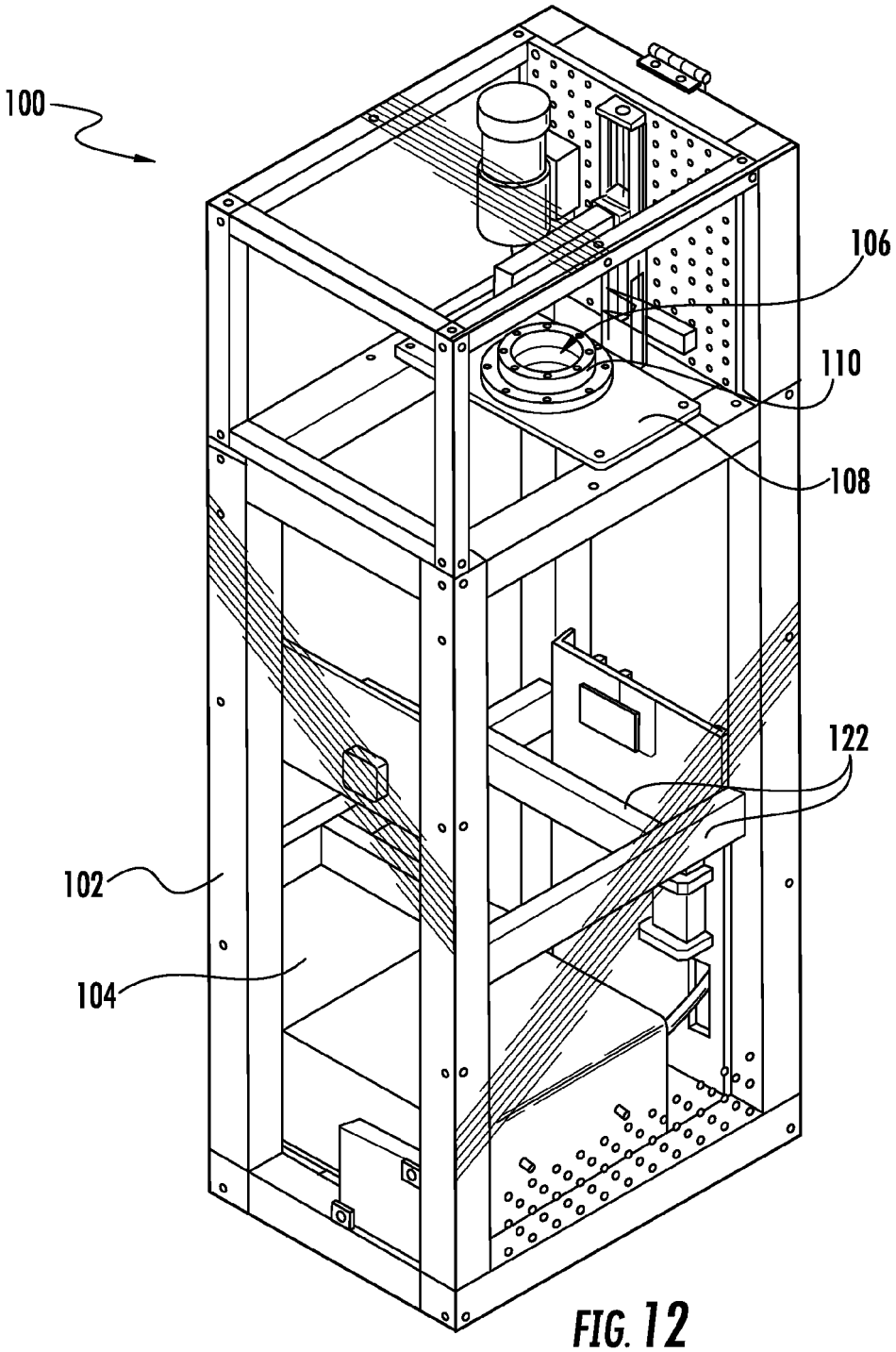

FIG. 12

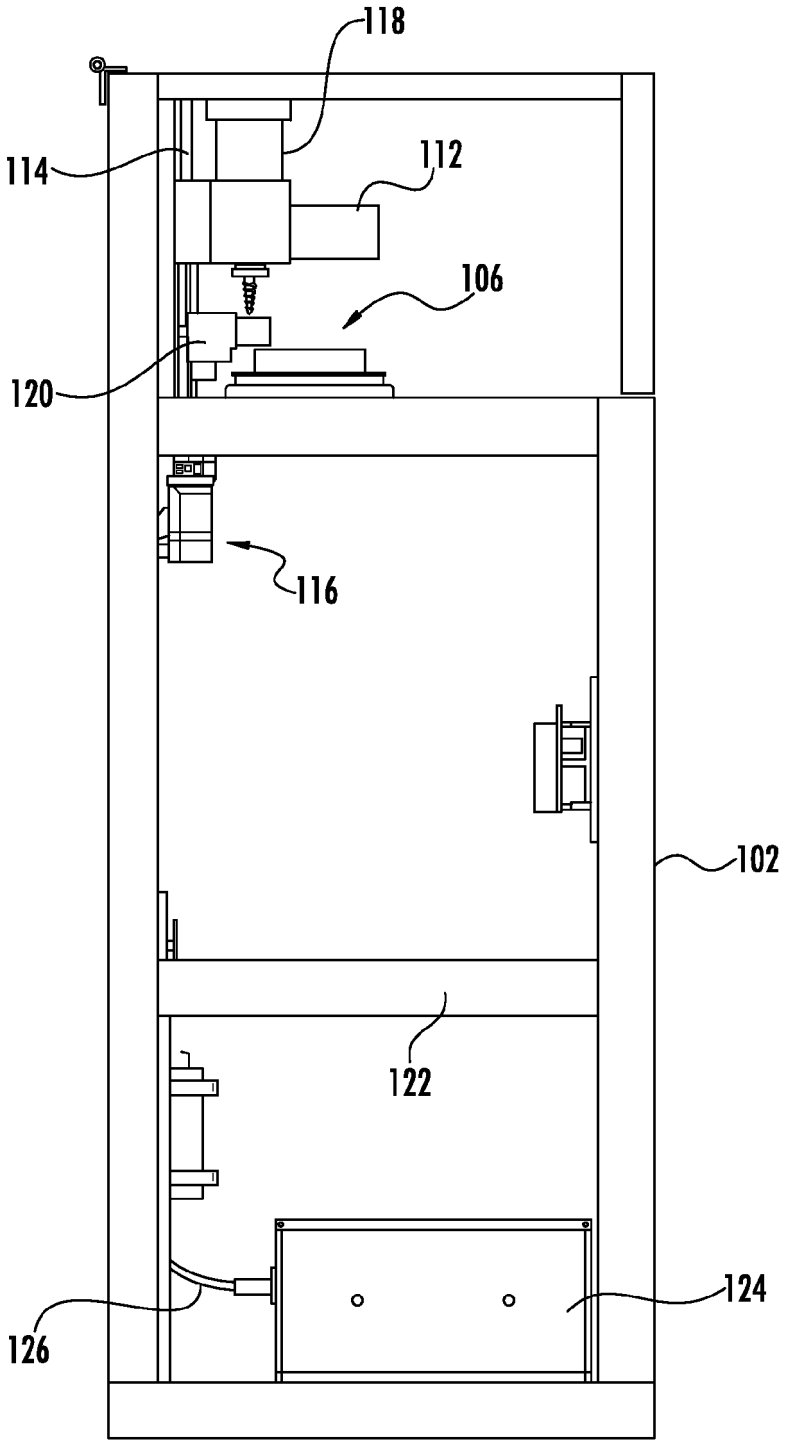

FIG. 13

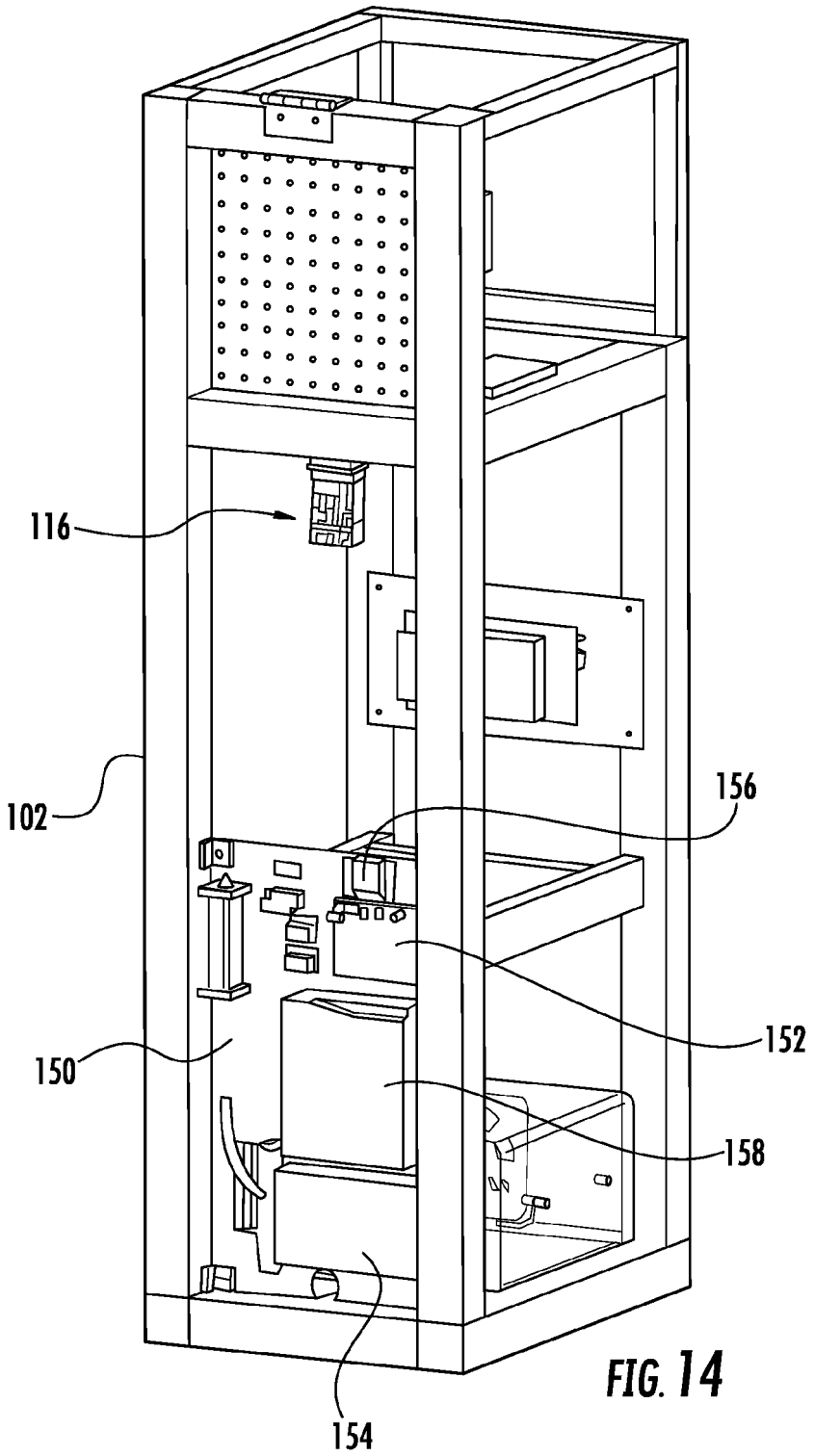

FIG. 14

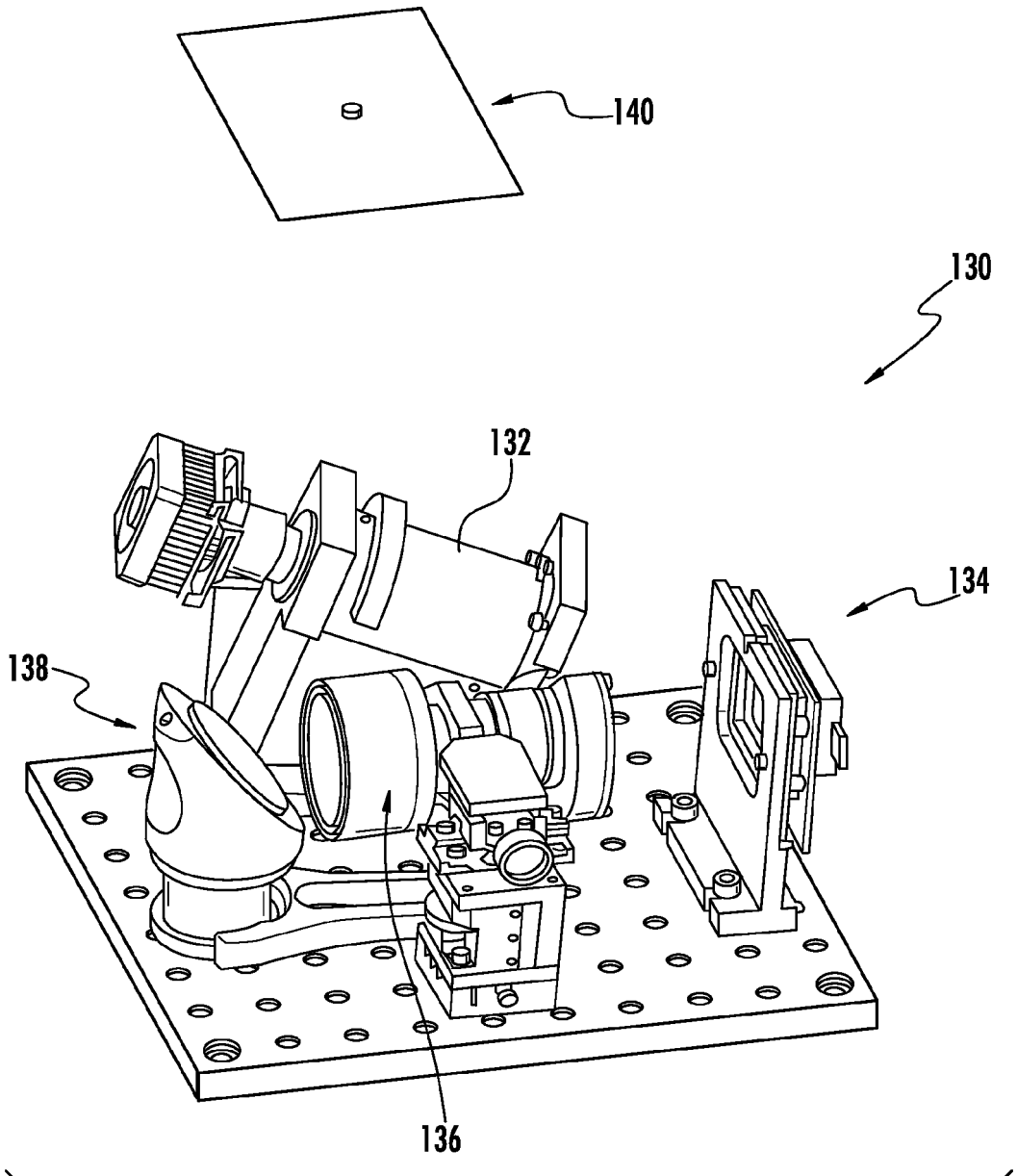

FIG. 15

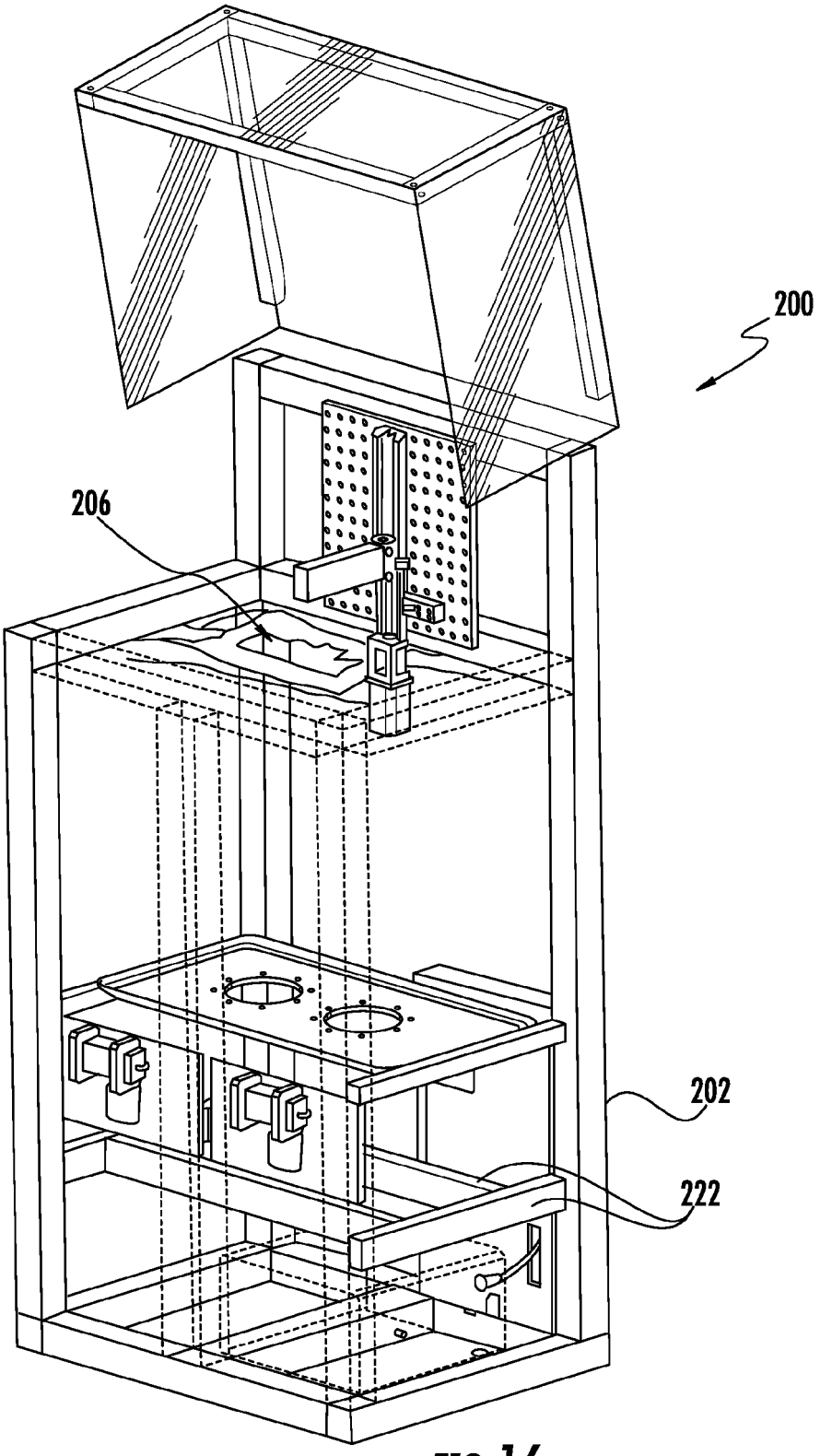

FIG. 16

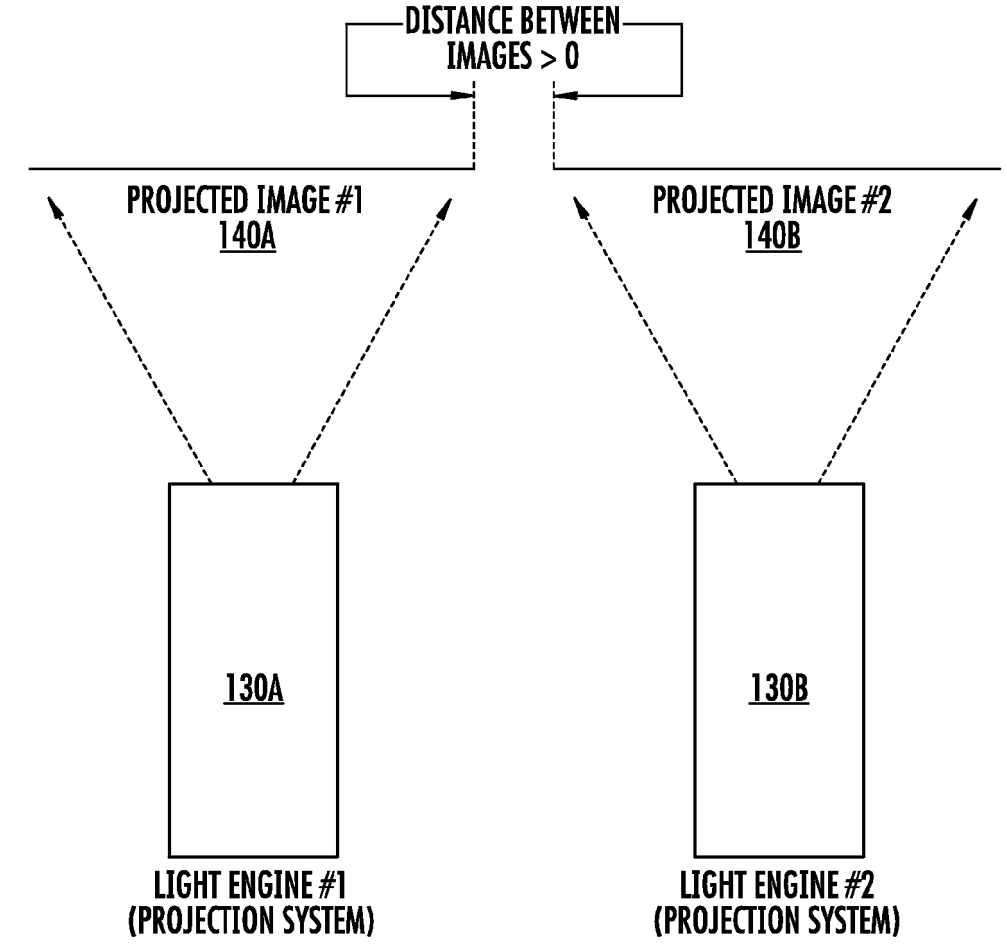
TILING SCENARIO #1: GAP BETWEEN IMAGES
DISTANCE BETWEEN IMAGES > 0
PROJECTED IMAGE #1
140A
PROJECTED IMAGE #2
140B
130A
130B
LIGHT ENGINE #1
(PROJECTION SYSTEM)
LIGHT ENGINE #2
(PROJECTION SYSTEM)
SIDE VIEW TWO LIGHT ENGINES

FIG. 17A

TILING SCENARIO #2: NO GAP BETWEEN IMAGES

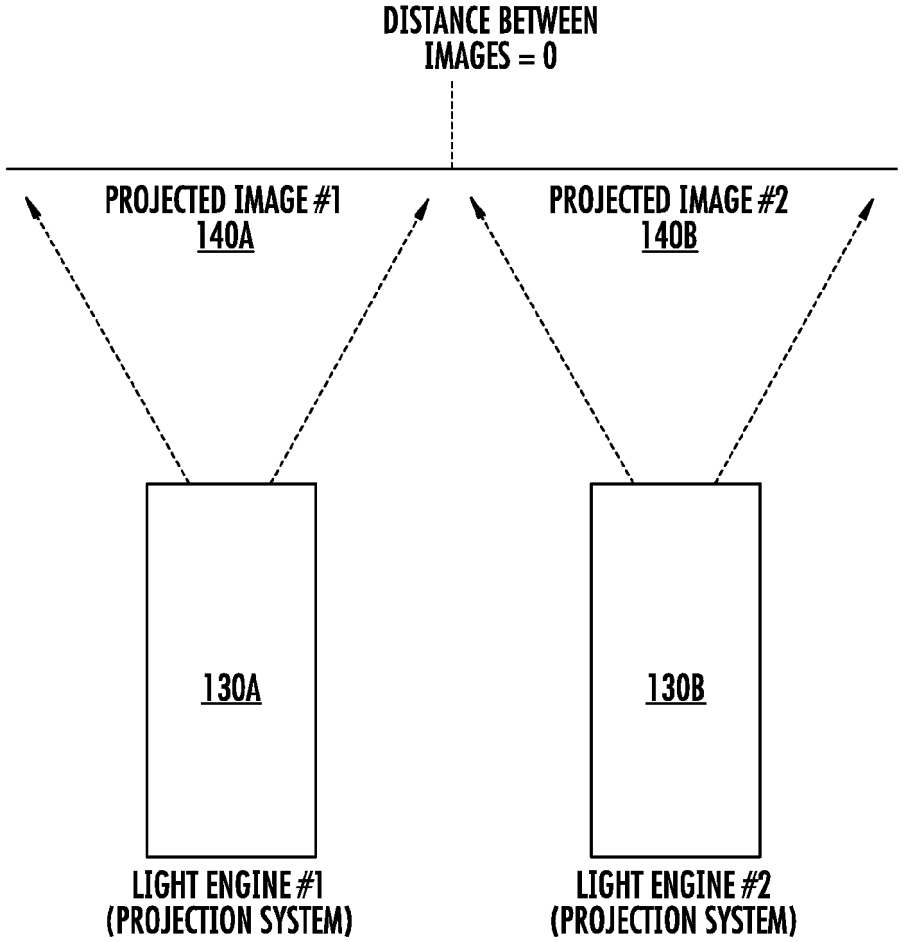

SIDE VIEW TWO LIGHT ENGINES

FIG. 17B

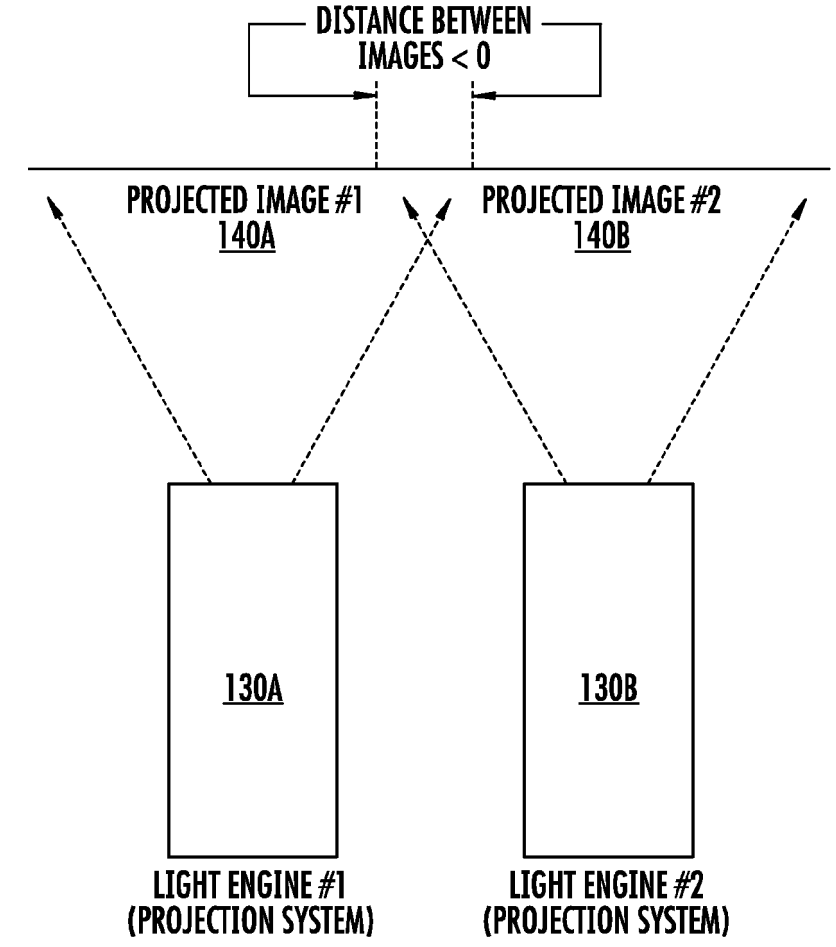
TILING SCENARIO #3: GAP BETWEEN IMAGES
DISTANCE BETWEEN IMAGES < 0
PROJECTED IMAGE #1 140A
PROJECTED IMAGE #2 140B
130A
130B
LIGHT ENGINE #1 (PROJECTION SYSTEM)
LIGHT ENGINE #2 (PROJECTION SYSTEM)
SIDE VIEW TWO LIGHT ENGINES

FIG. 17C

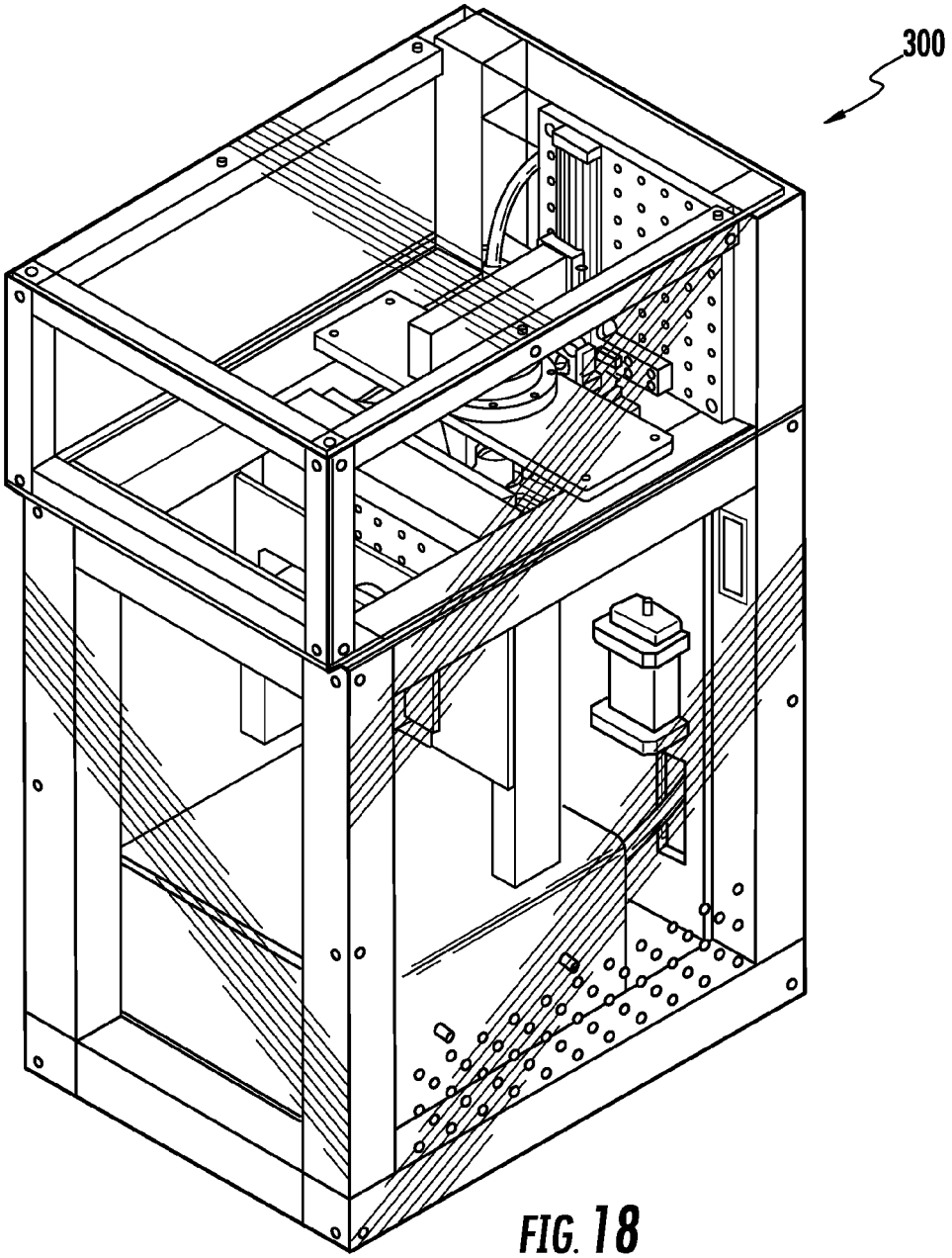

FIG. 18

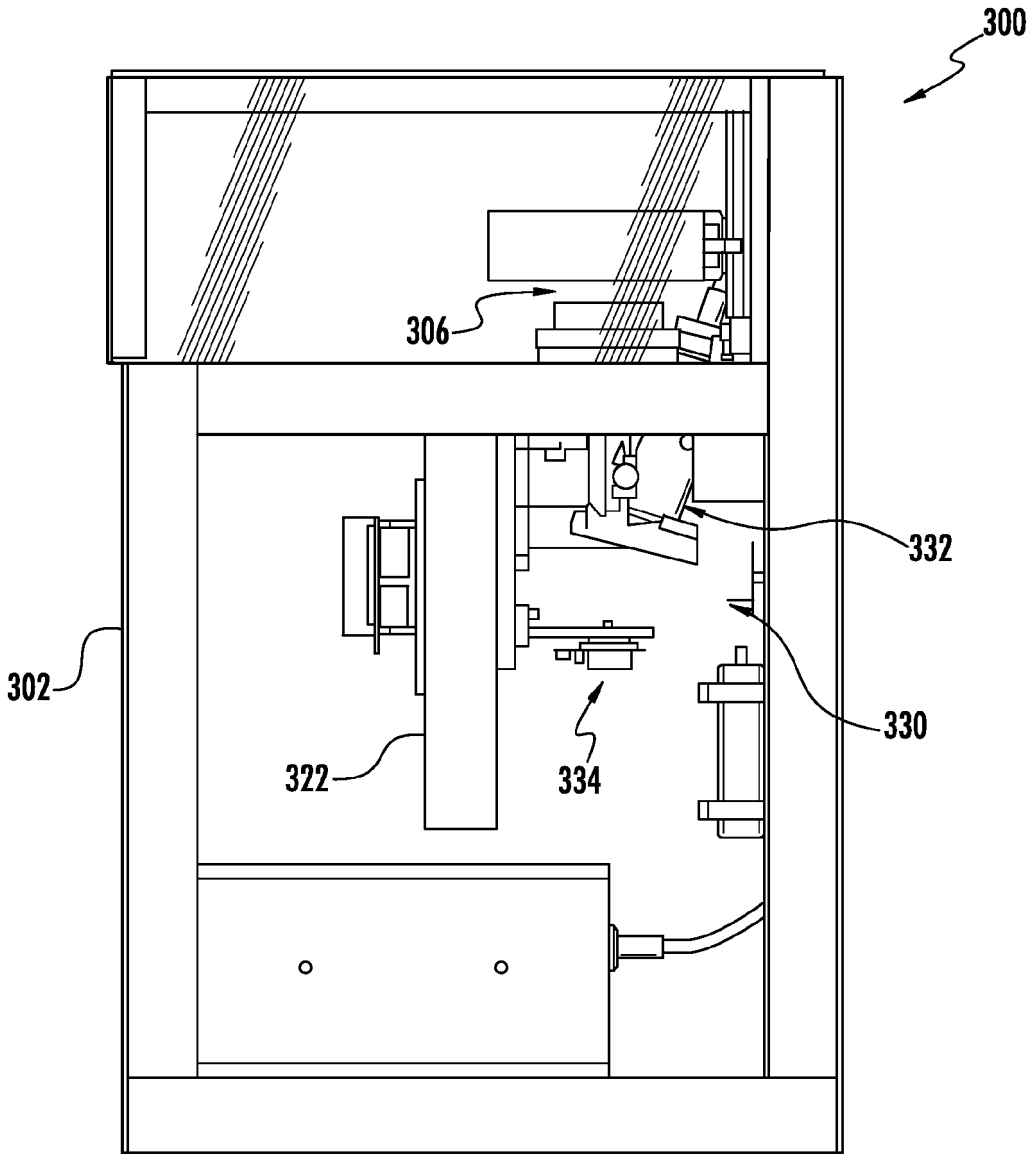

FIG. 19

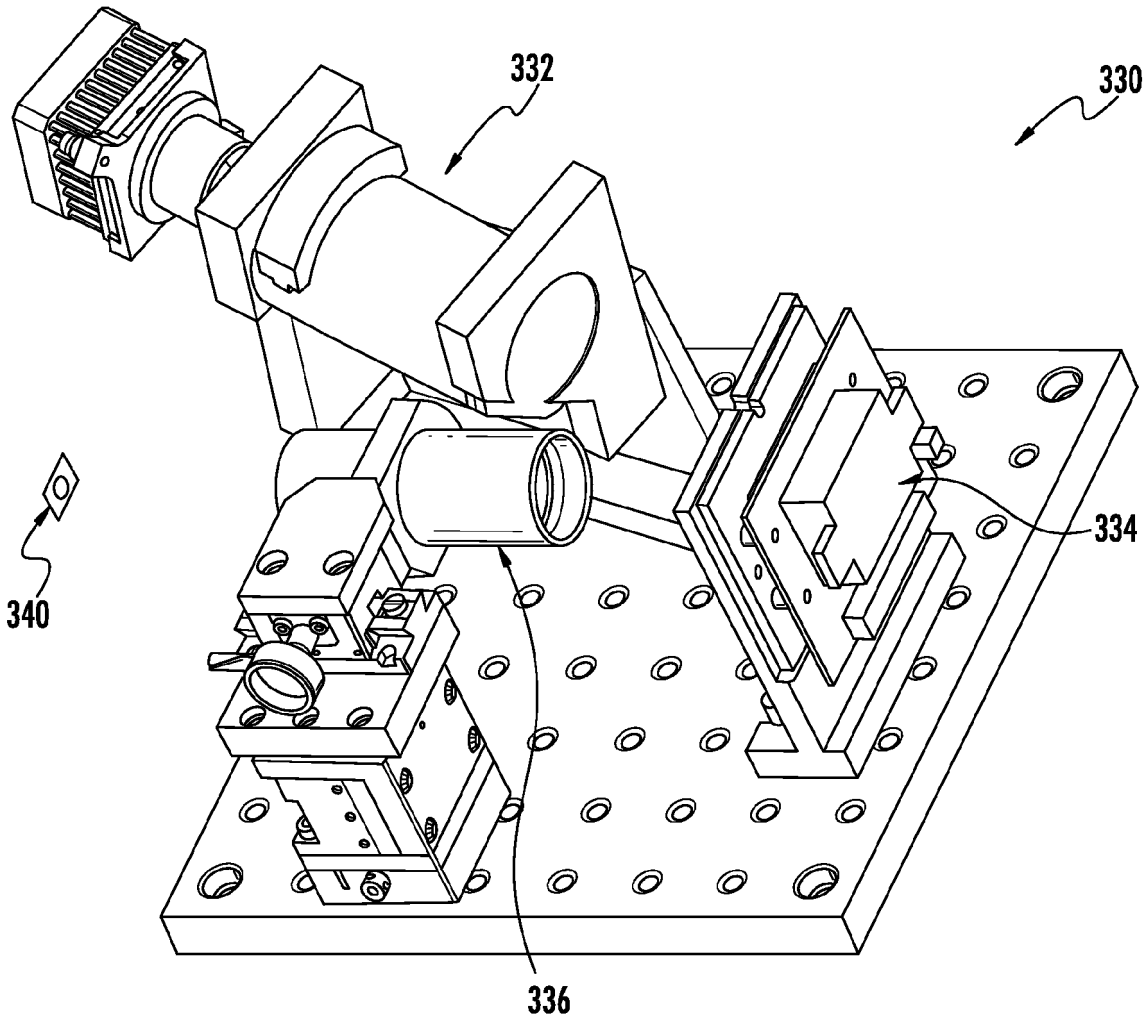

FIG. 20



FIG. 21

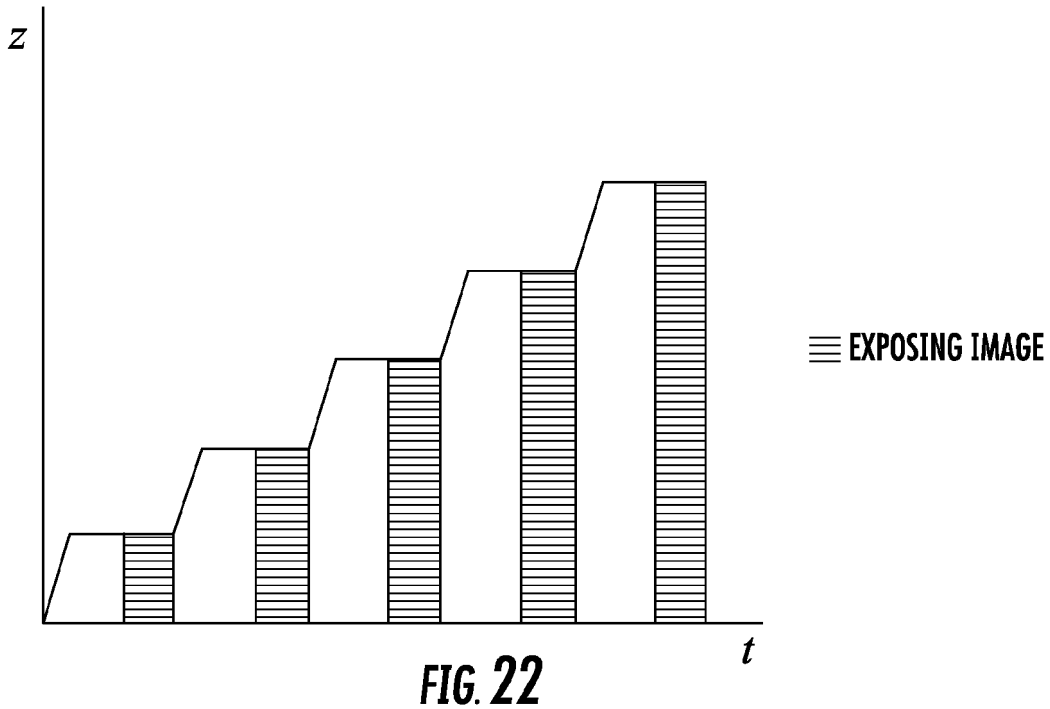

FIG. 22

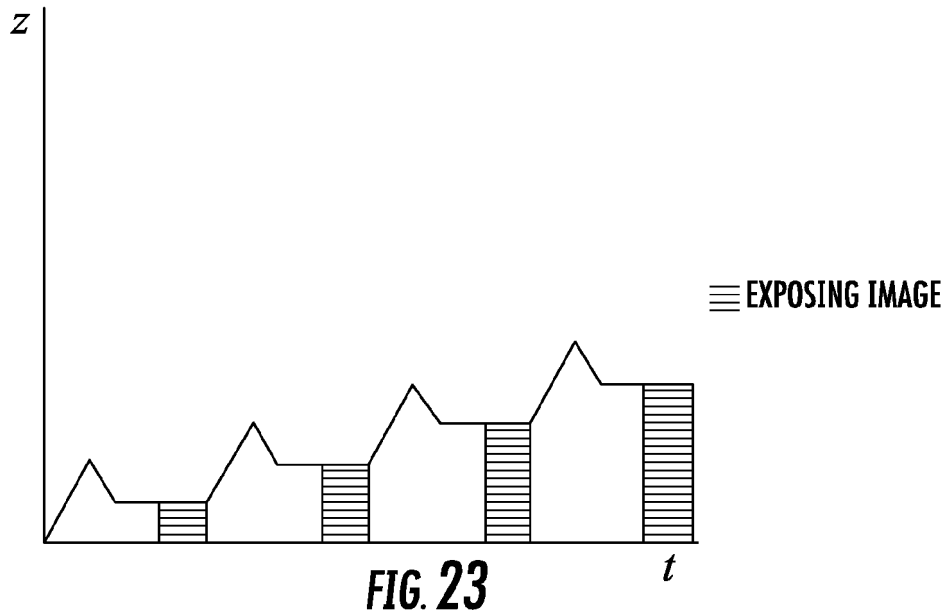
z
EXPOSING IMAGE
t

FIG. 23

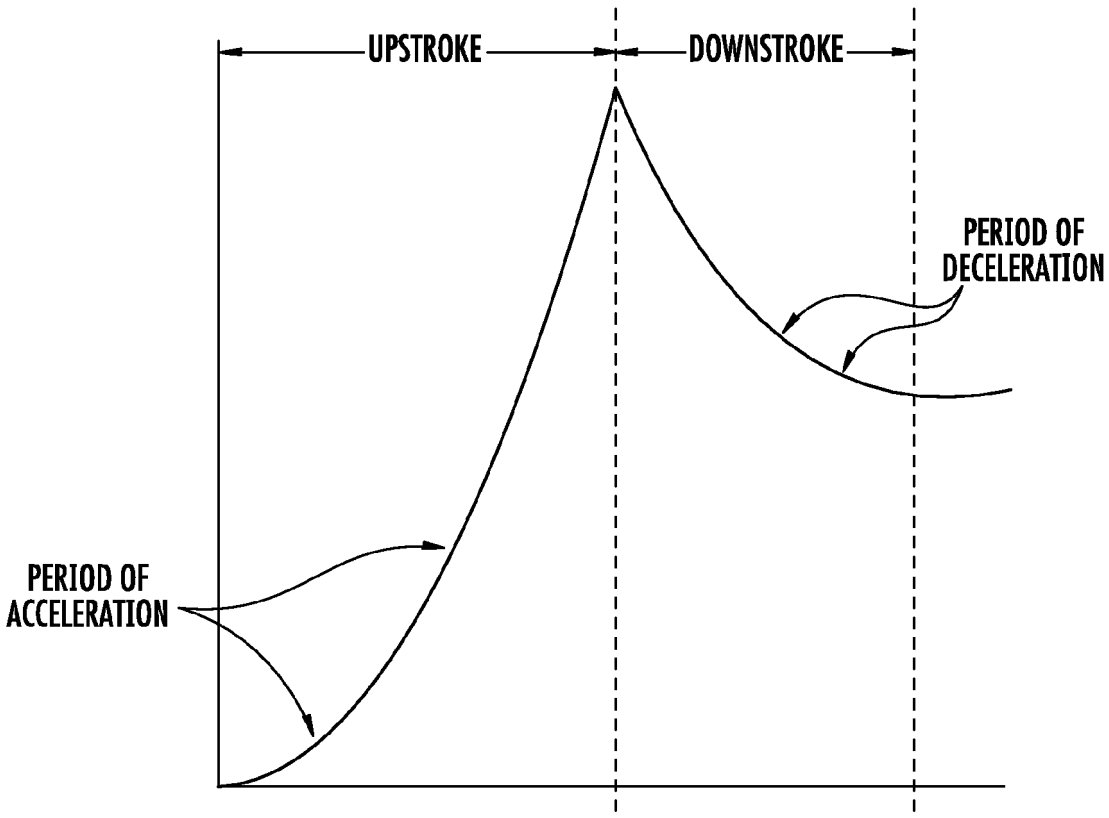
UPSTROKE
DOWNSTROKE
PERIOD OF DECELERATION
PERIOD OF ACCELERATION

FIG. 24

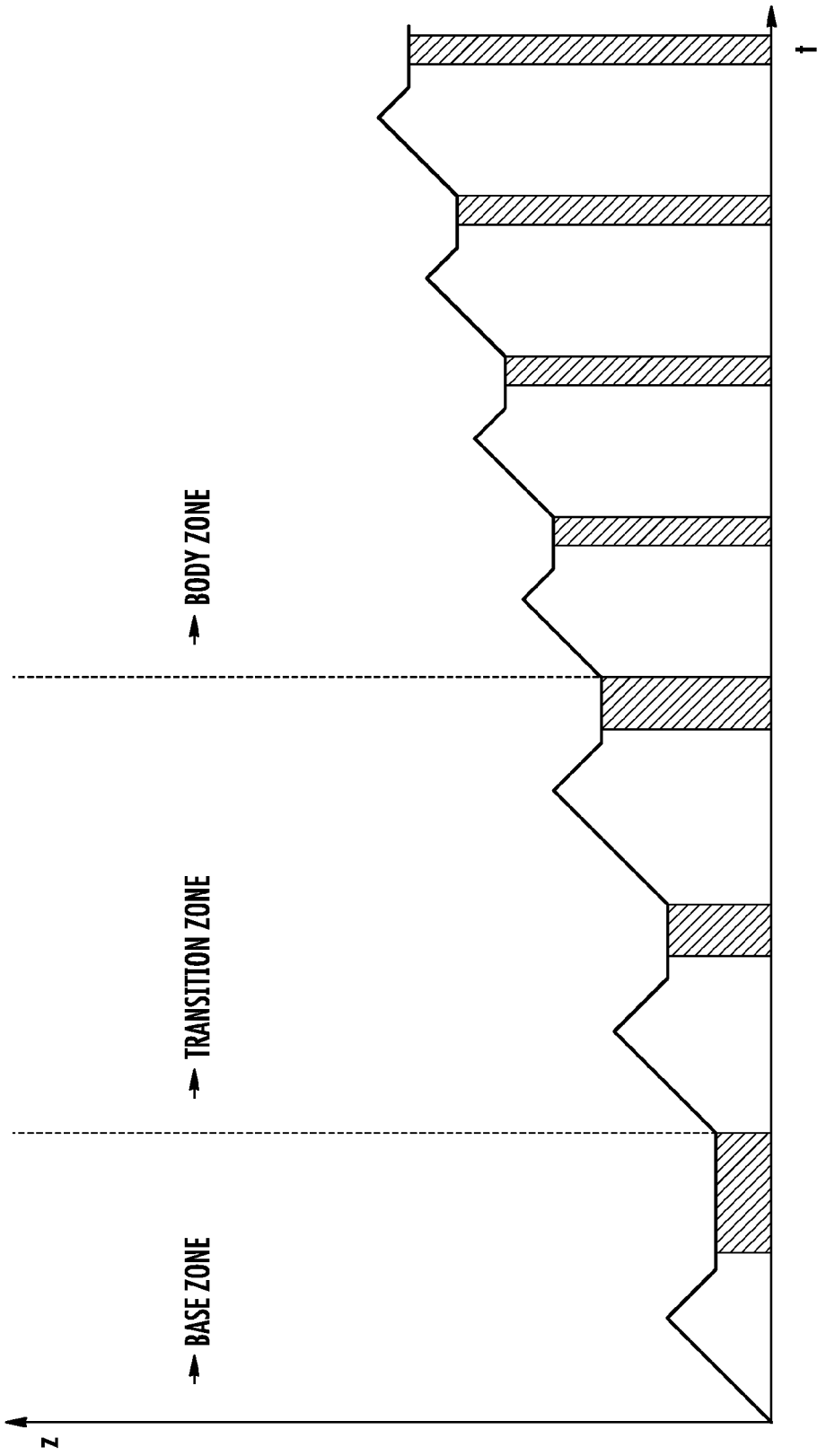

FIG. 25

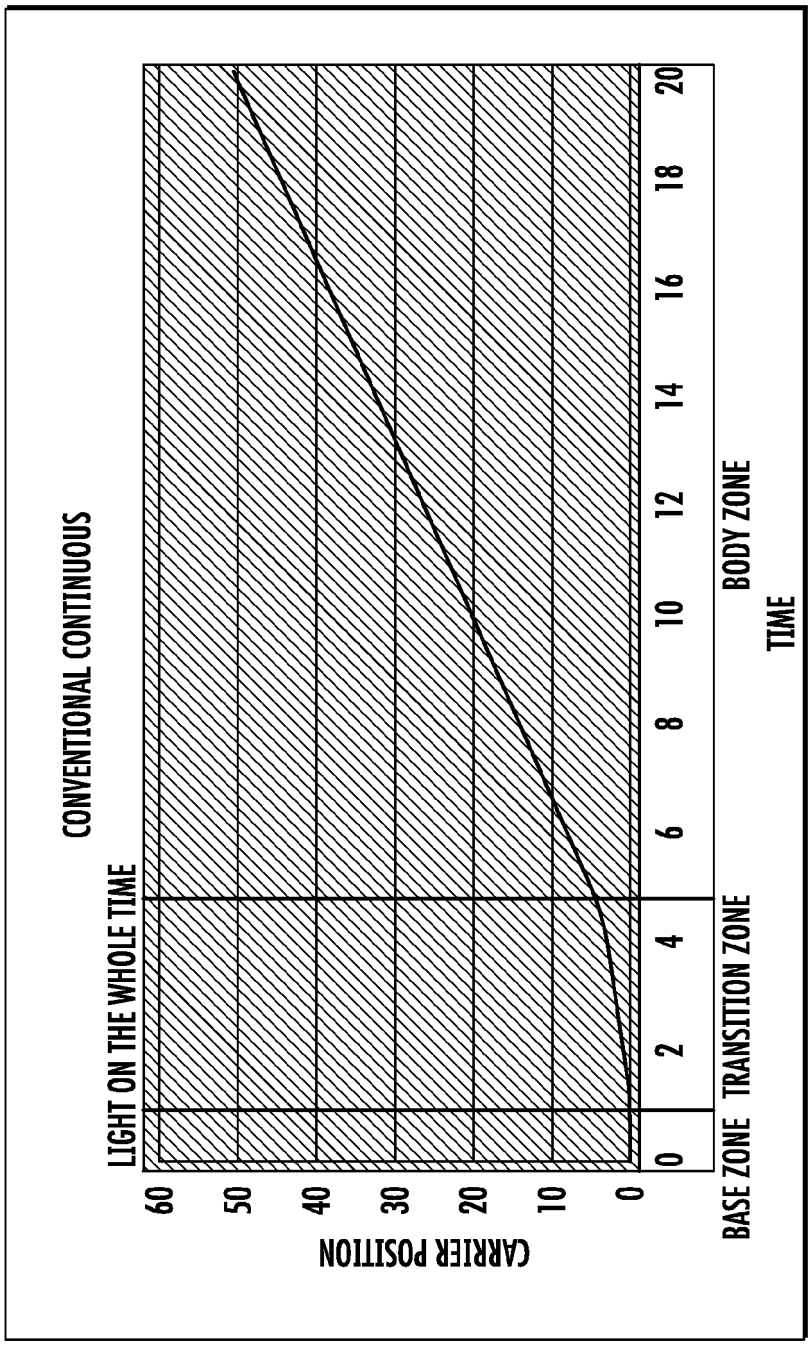
CONVENTIONAL CONTINUOUS
LIGHT ON THE WHOLE TIME
CARRIER POSITION
60
50
40
30
20
10
0
0
2
4
6
8
10
12
14
16
18
20
BASE ZONE
TRANSITION ZONE
BODY ZONE
TIME

FIG. 26A

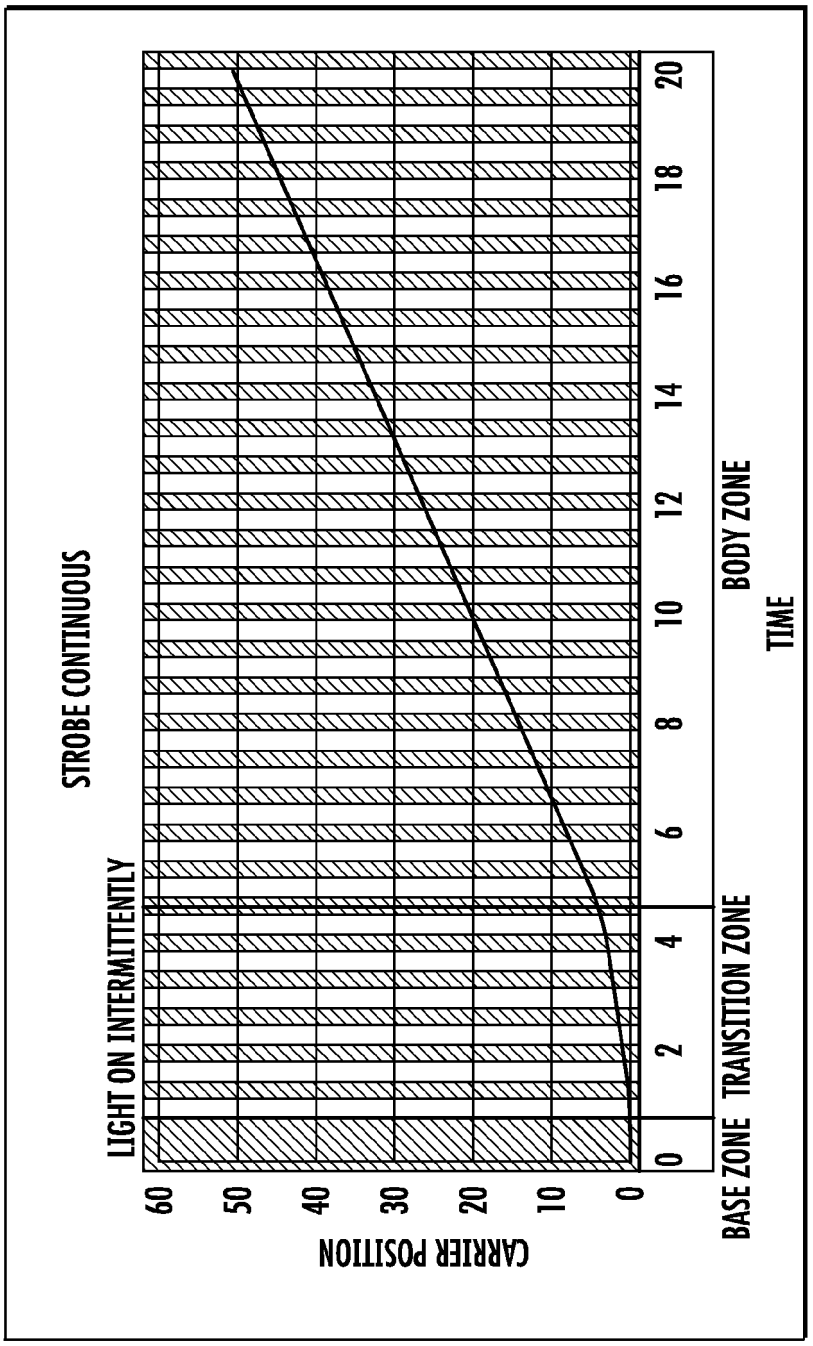
STROBE CONTINUOUS
LIGHT ON INTERMITTENTLY
CARRIER POSITION
60
50
40
30
20
10
0
0
2
4
6
8
10
12
14
16
18
20
BASE ZONE
TRANSITION ZONE
BODY ZONE
TIME

FIG. 26B

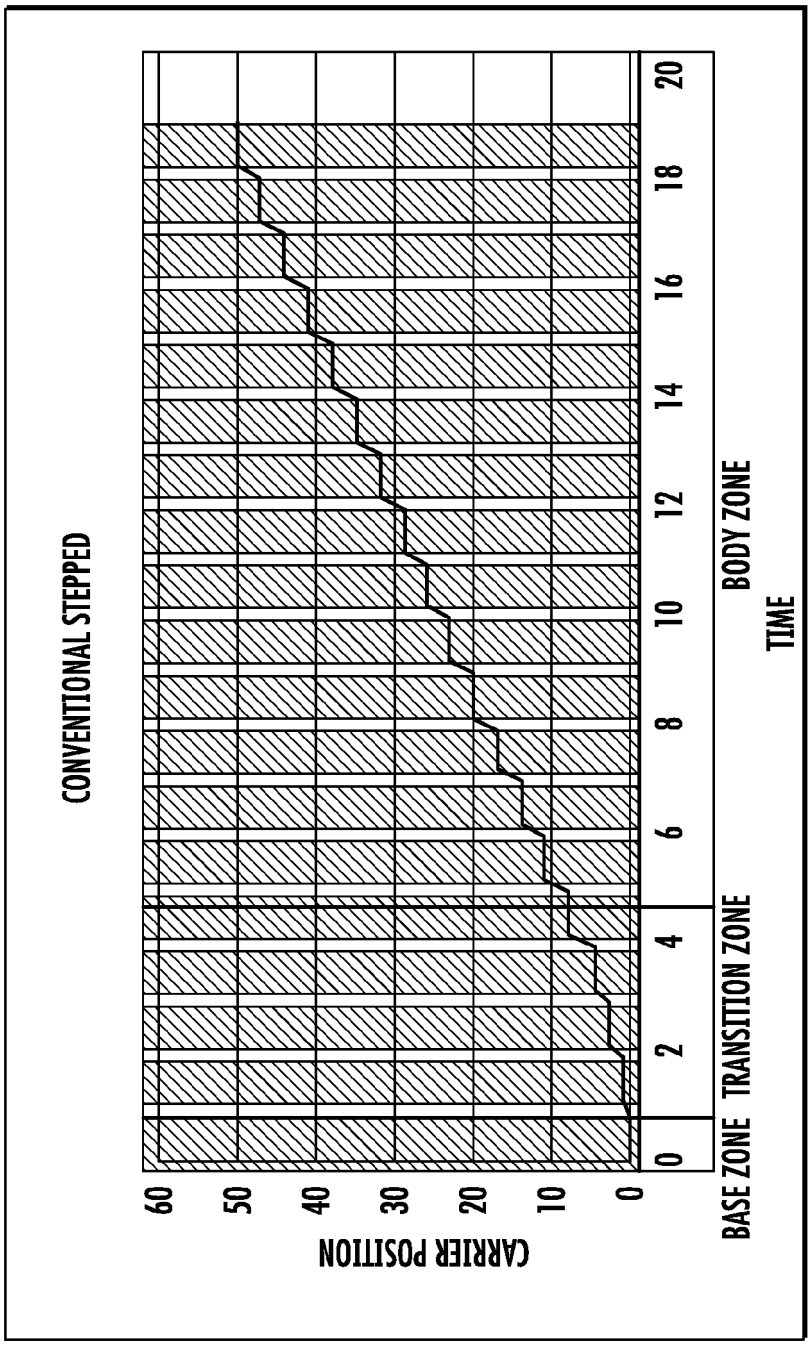
CONVENTIONAL STEPPED
CARRIER POSITION
60
50
40
30
20
10
0
0
2
4
6
8
10
12
14
16
18
20
BASE ZONE
TRANSITION ZONE
BODY ZONE
TIME

FIG. 27A

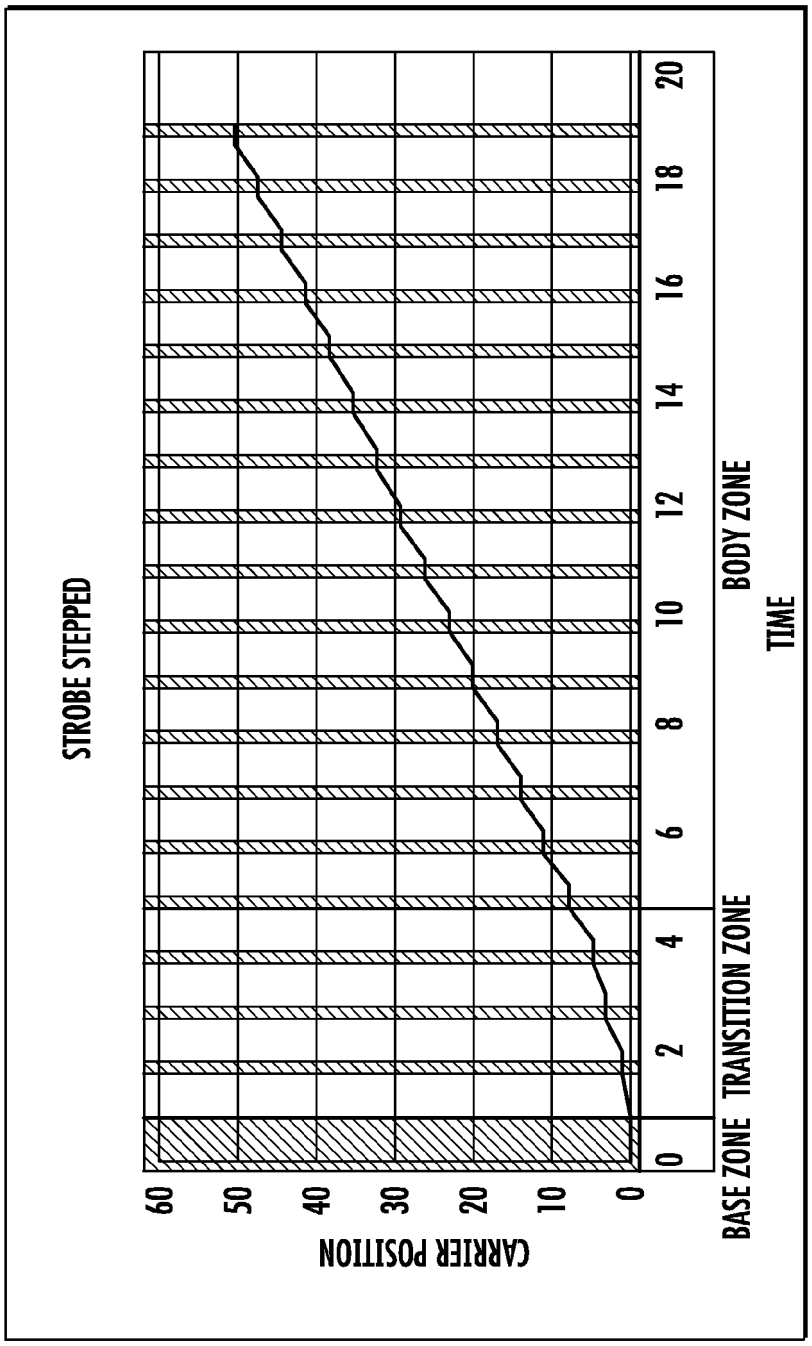
STROBE STEPPED
CARRIER POSITION
60
50
40
30
20
10
0
0
2
4
6
8
10
12
14
16
18
20
BASE ZONE
TRANSITION ZONE
BODY ZONE
TIME

FIG. 27B

FIG. 28A

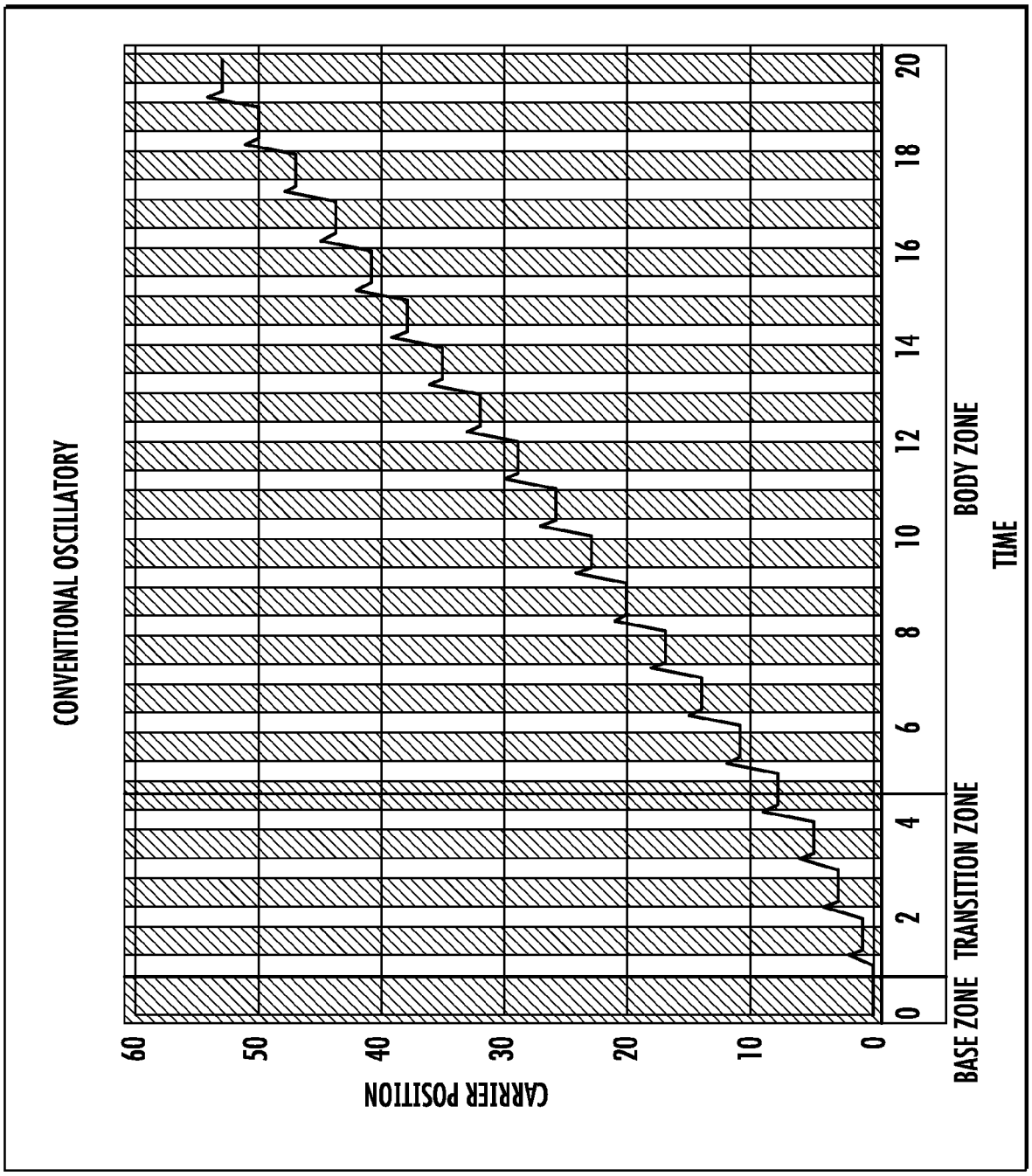
CONVENTIONAL OSCILLATORY
CARRIER POSITION
60
50
40
30
20
10
0
0
2
4
6
8
10
12
14
16
18
20
BASE ZONE
TRANSITION ZONE
BODY ZONE
TIME

FIG. 28B

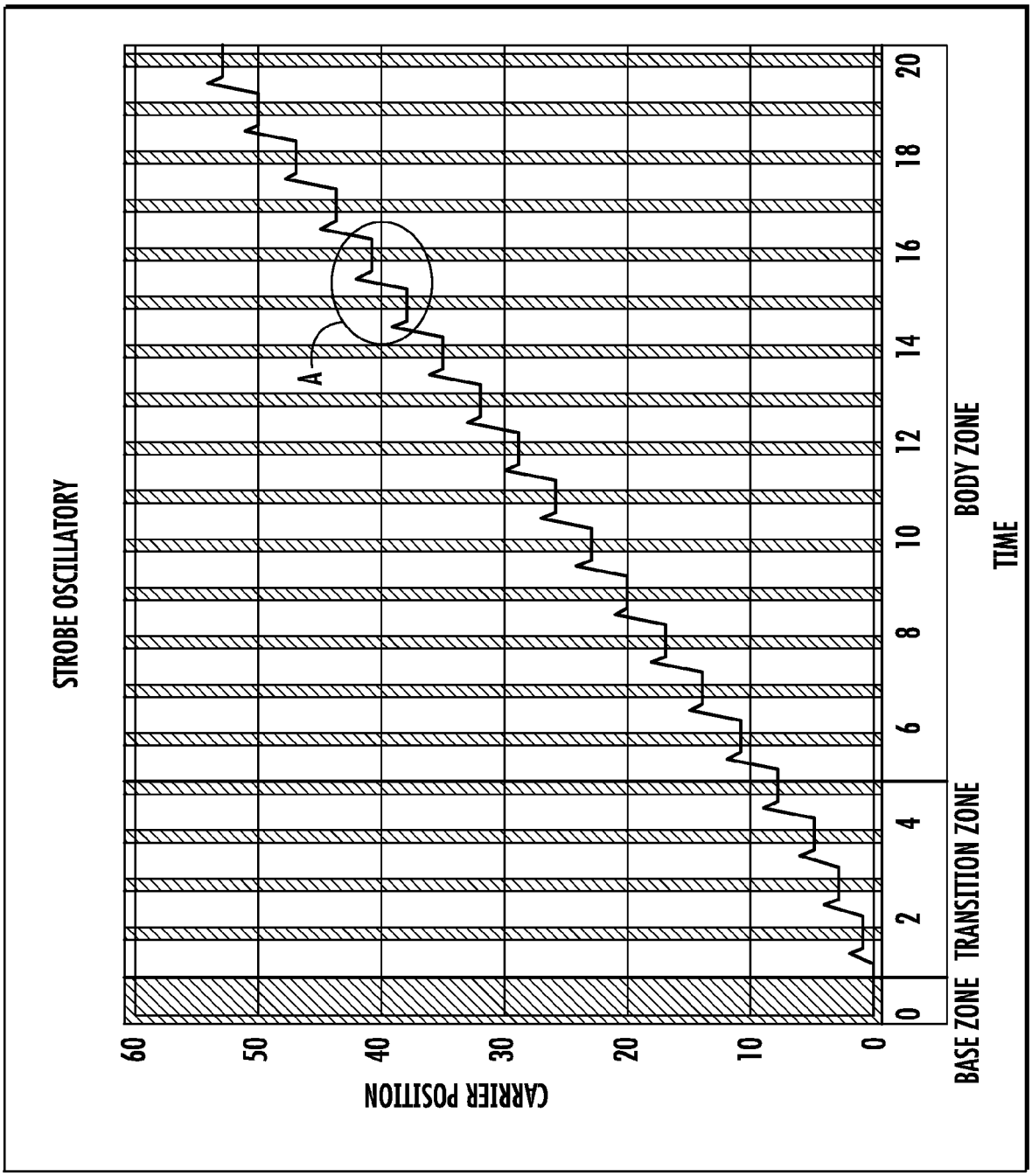
STROBE OSCILLATORY
CARRIER POSITION
60
50
40
30
20
10
0
A
0
2
4
6
8
10
12
14
16
18
20
BASE ZONE
TRANSITION ZONE
BODY ZONE
TIME

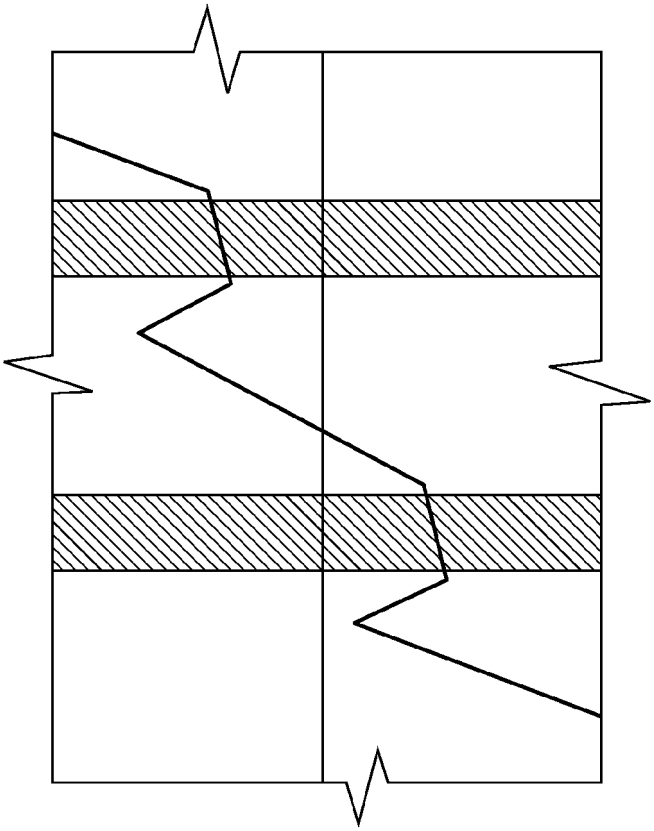

FIG. 29B

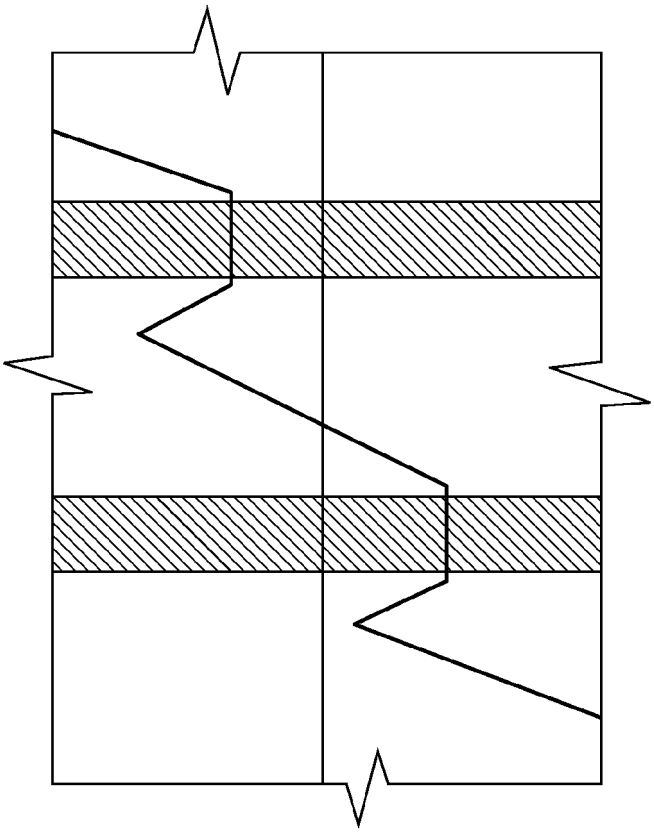

FIG. 29A