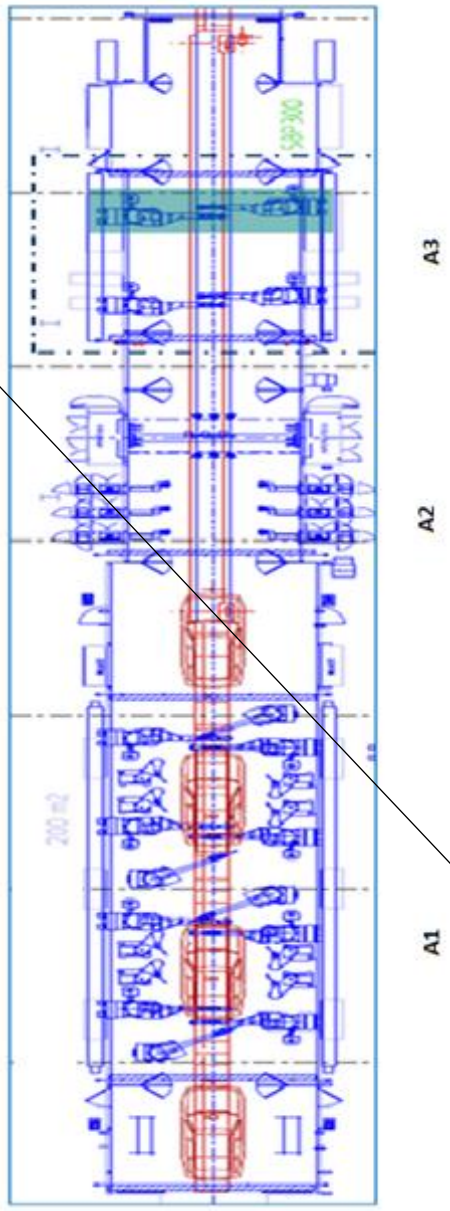

FIG. 1

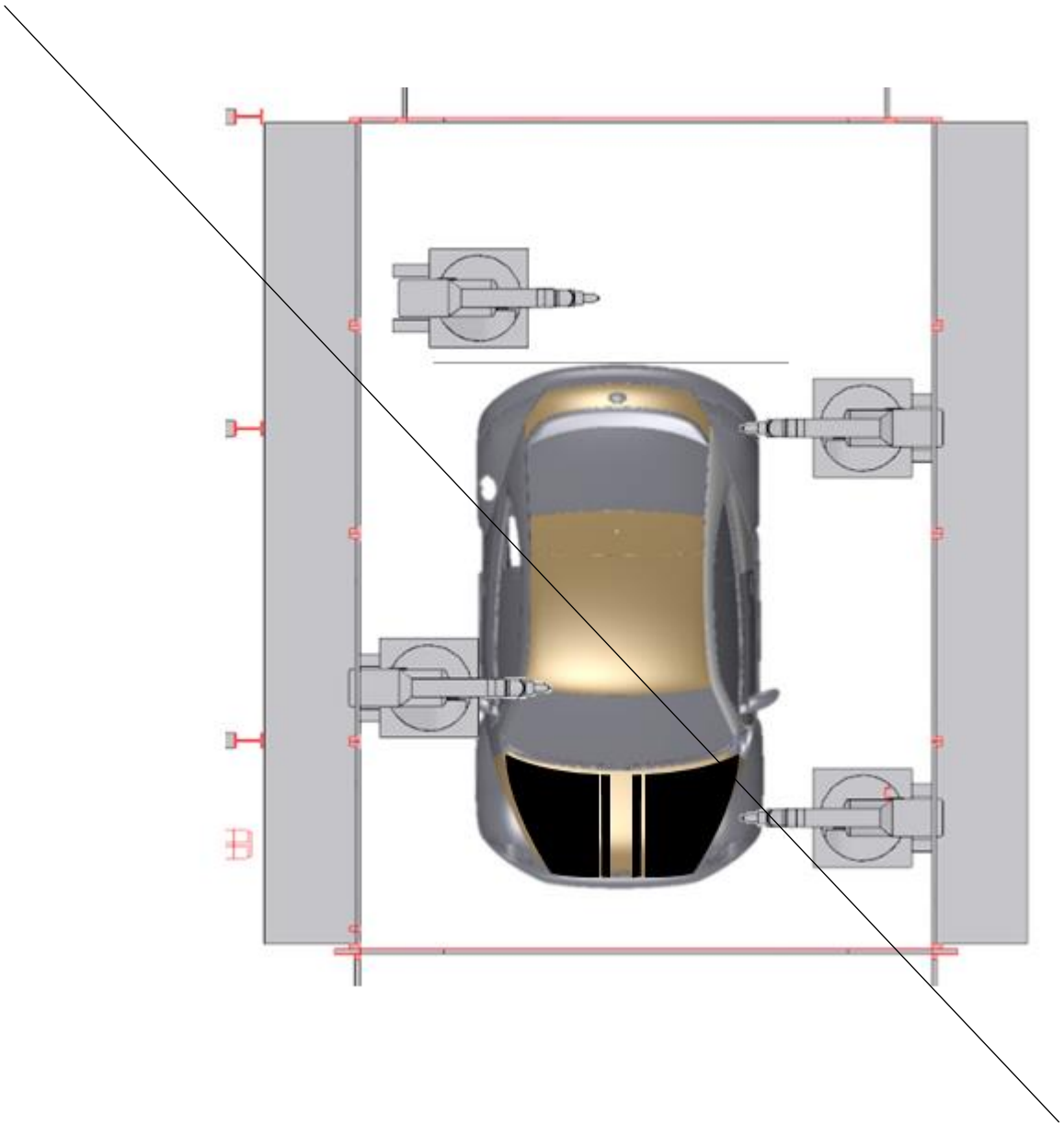

FIG. 2

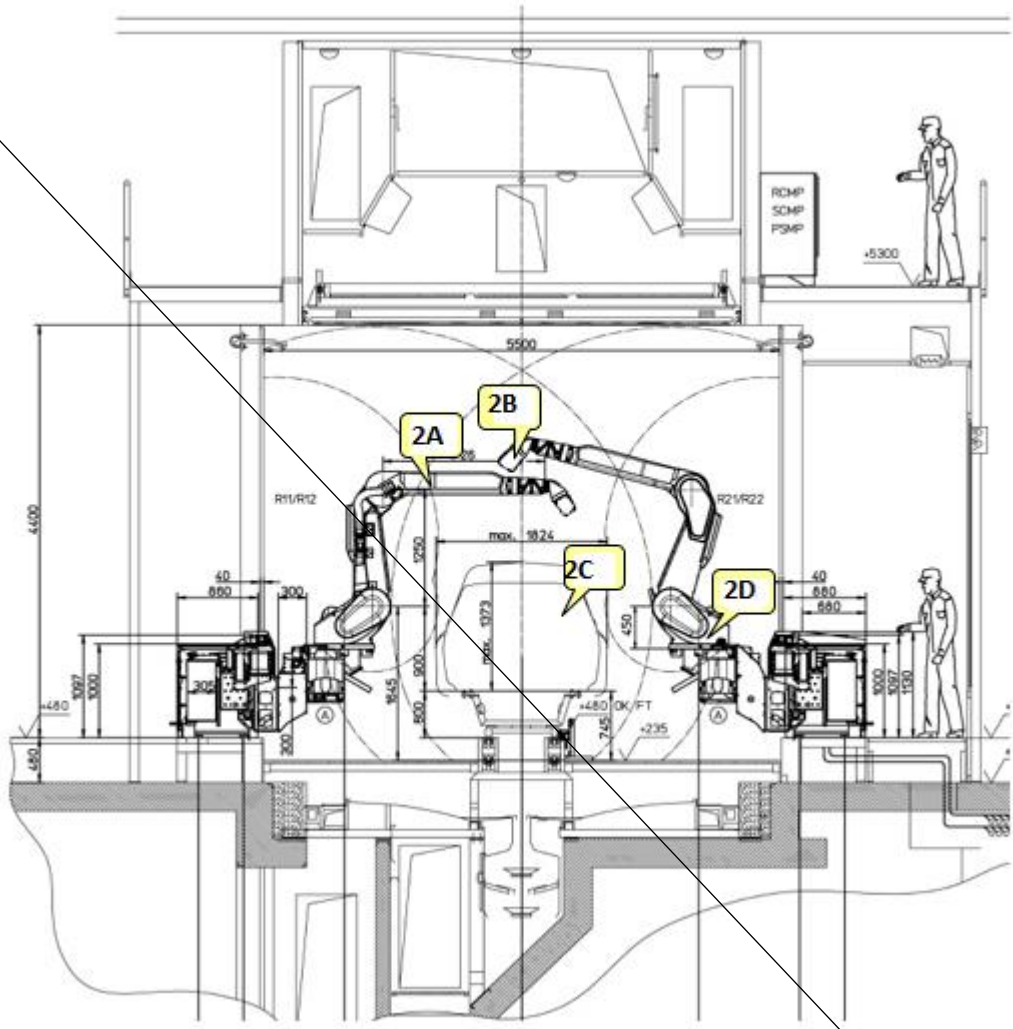
2A
2B
2C
2D
RCMP
SCMP
PSMP
+5300
5500
R11/R12
R21/R22
max. 1824
max. 1373
4400
+480
+235
0K/FT

FIG. 3

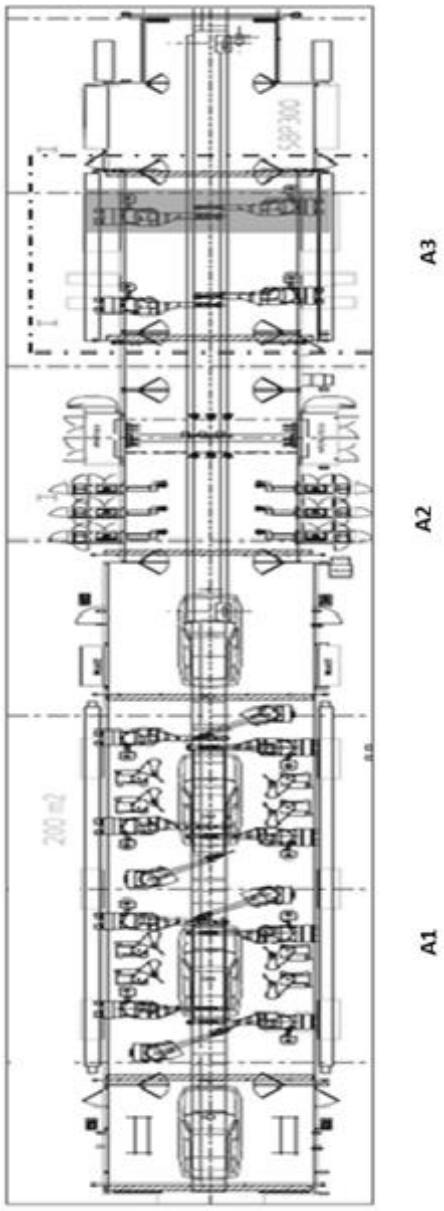

FIG. 1

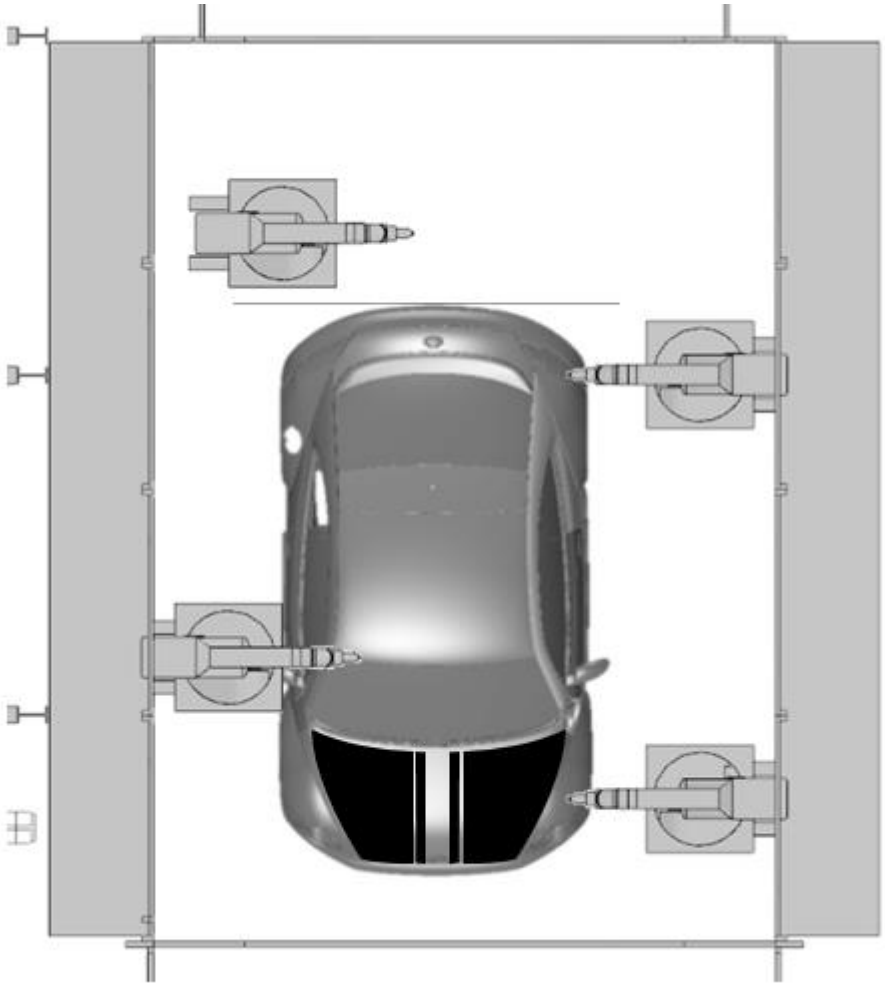

FIG. 2

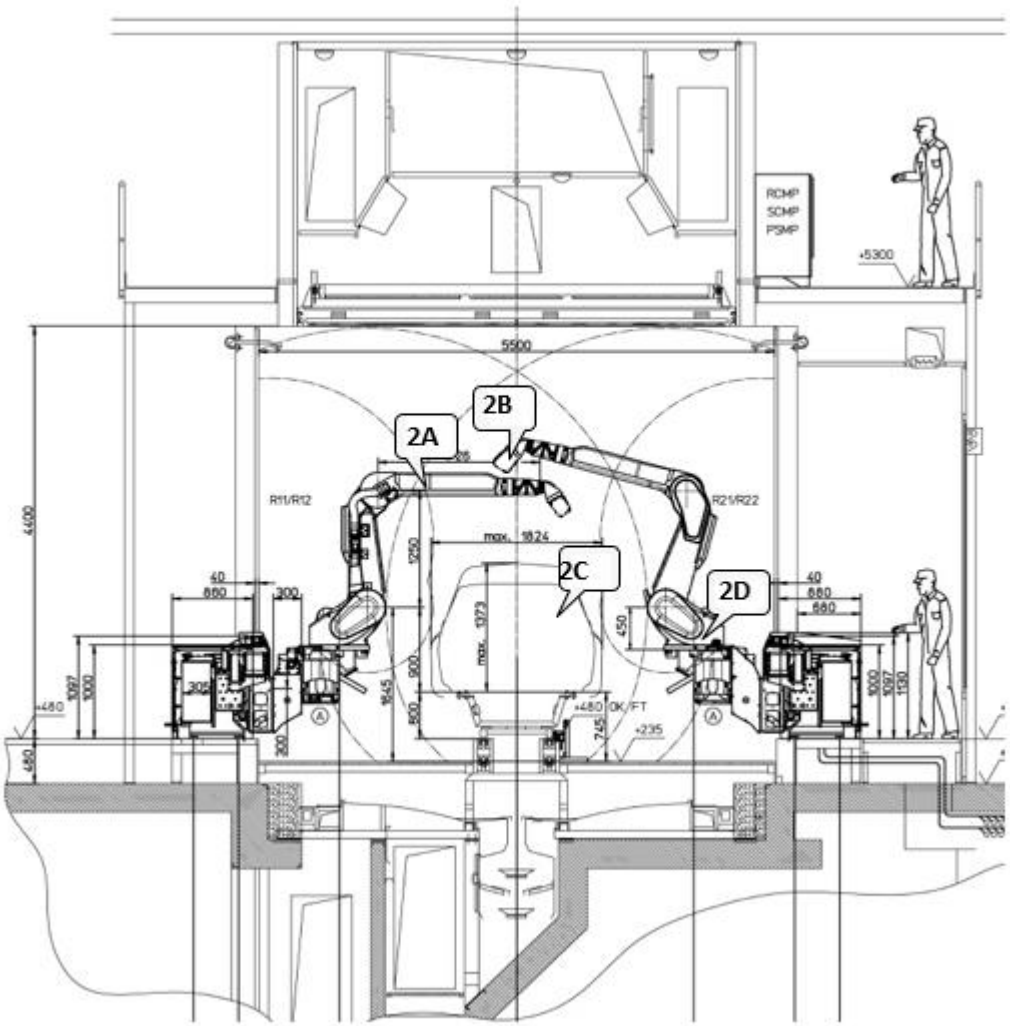
RCMP
SCMP
PSMP
+5300
5500
2A
2B
2C
2D
R11/R12
R21/R22
max. 1824
max. 1373
4400
1250
1845
900
800
450
745
+480
+235
OK/FT
1000
1097
1130
480
300
40
680
305
200

FIG. 3