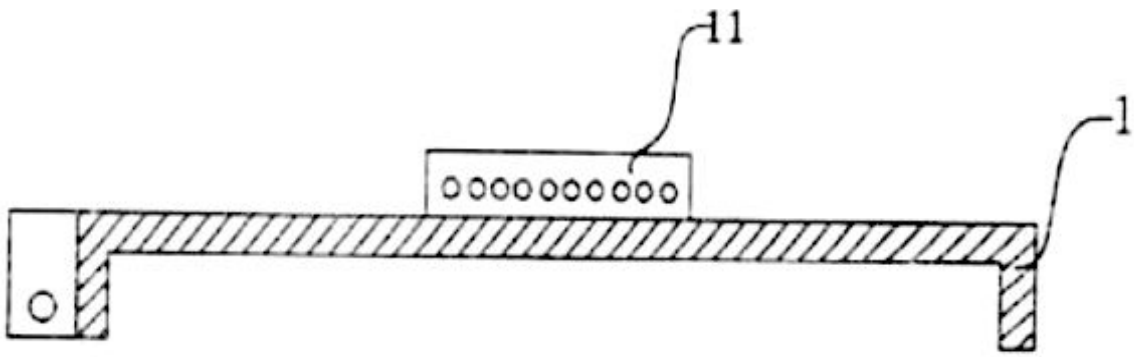

Picture 1

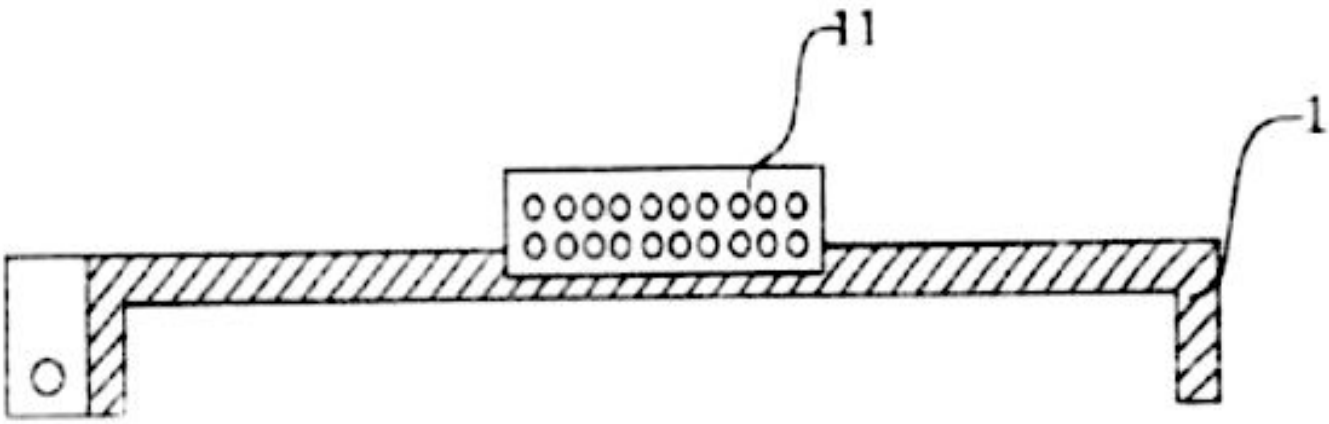

Picture 2

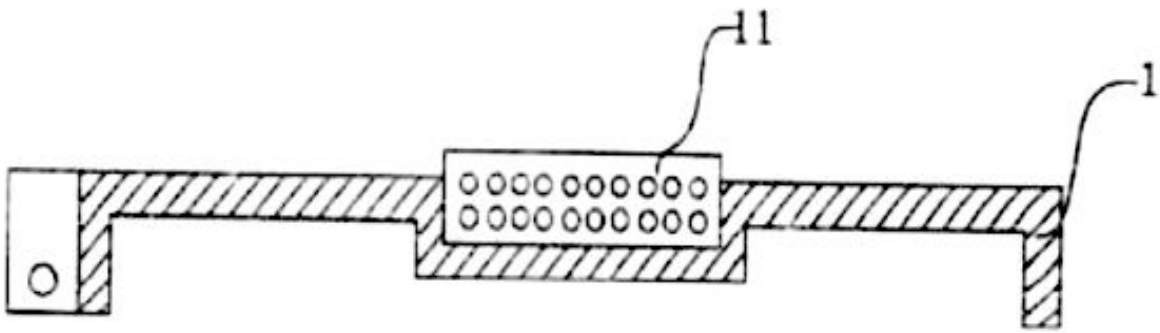

Picture 3

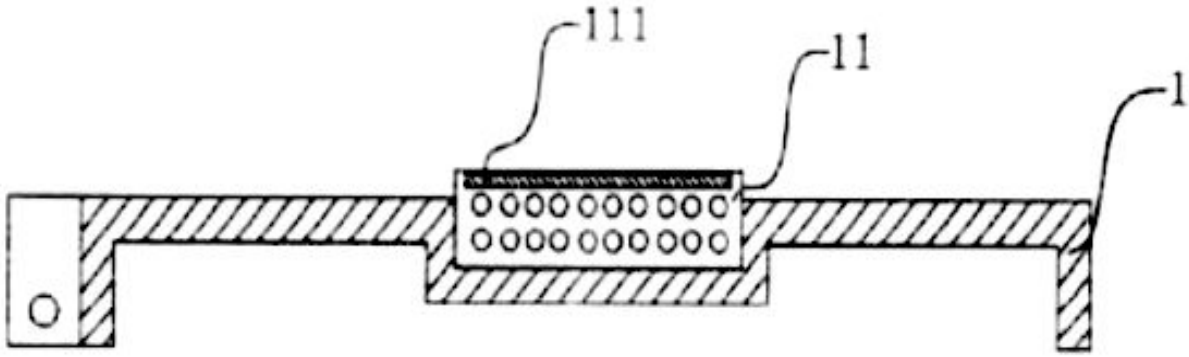

Picture 4

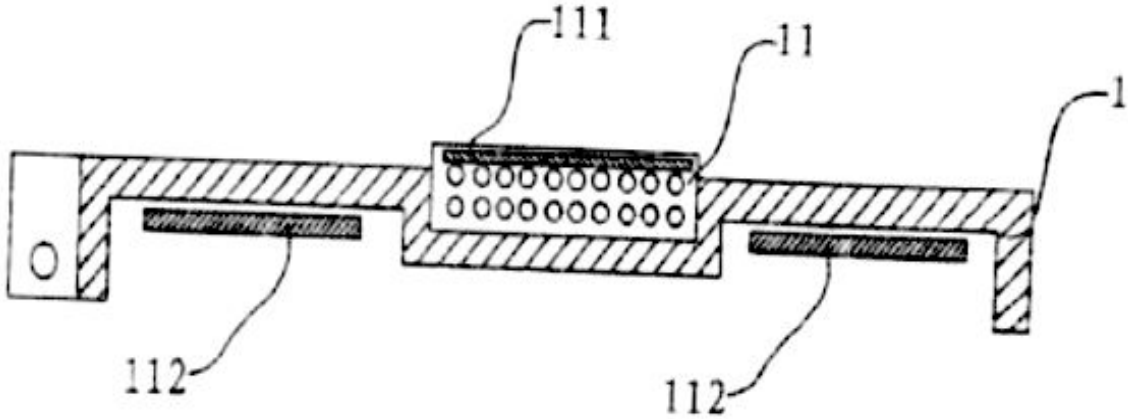

Picture 5

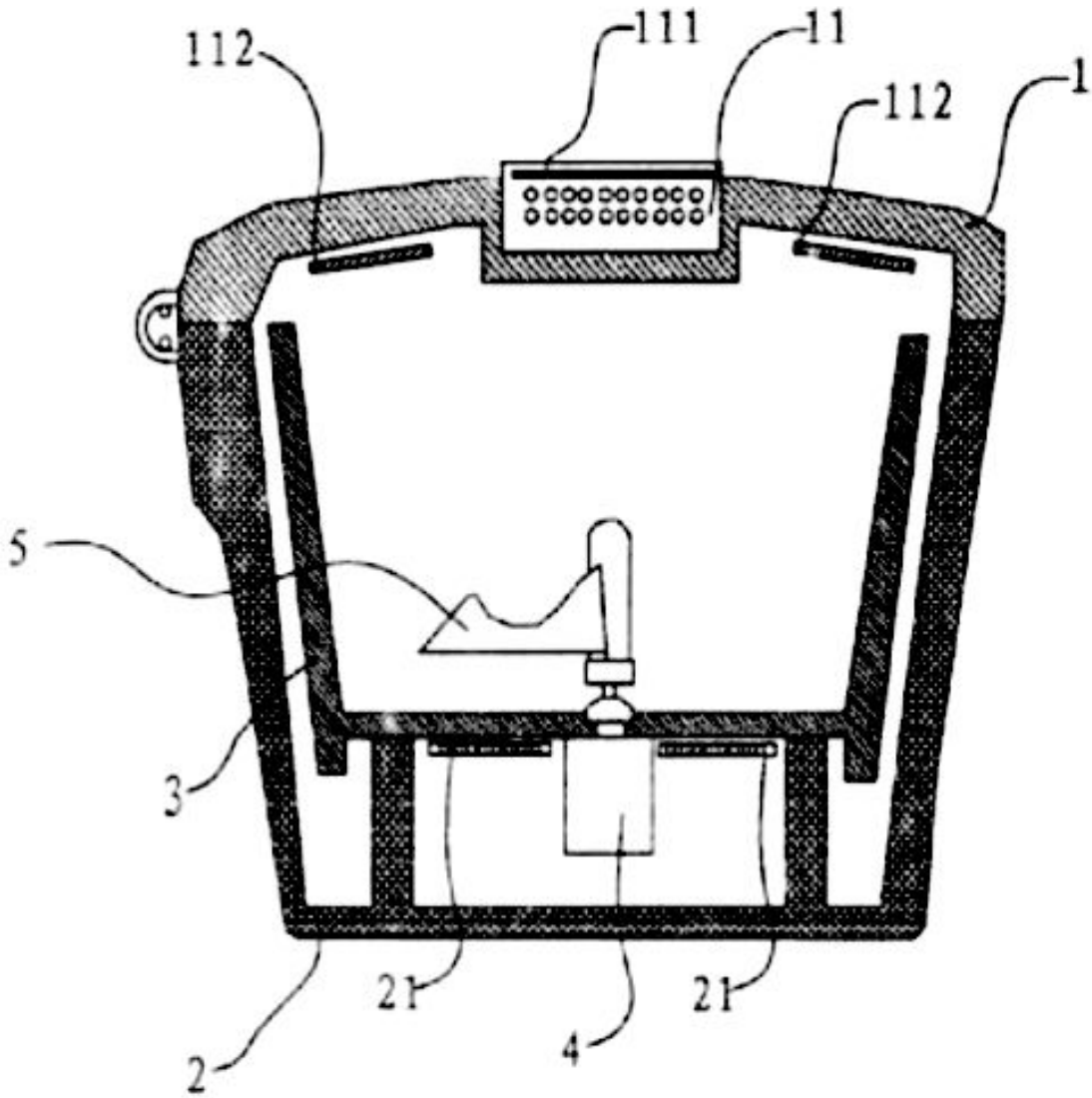

Picture 6