[Drawing]

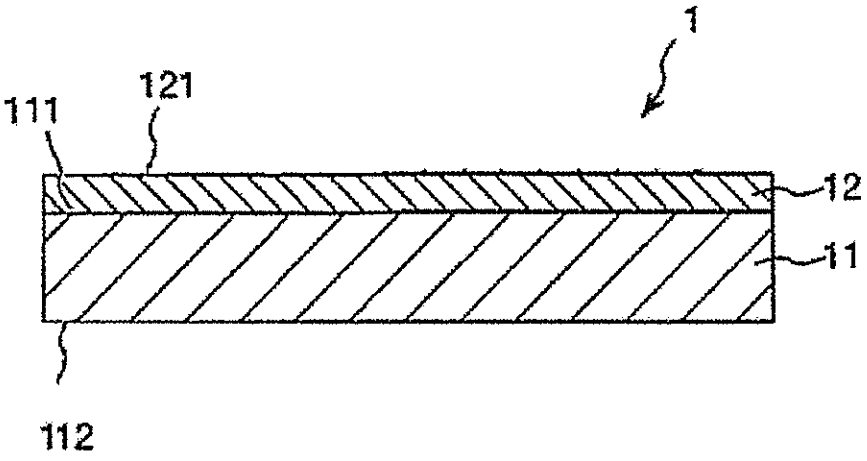

FIG.1