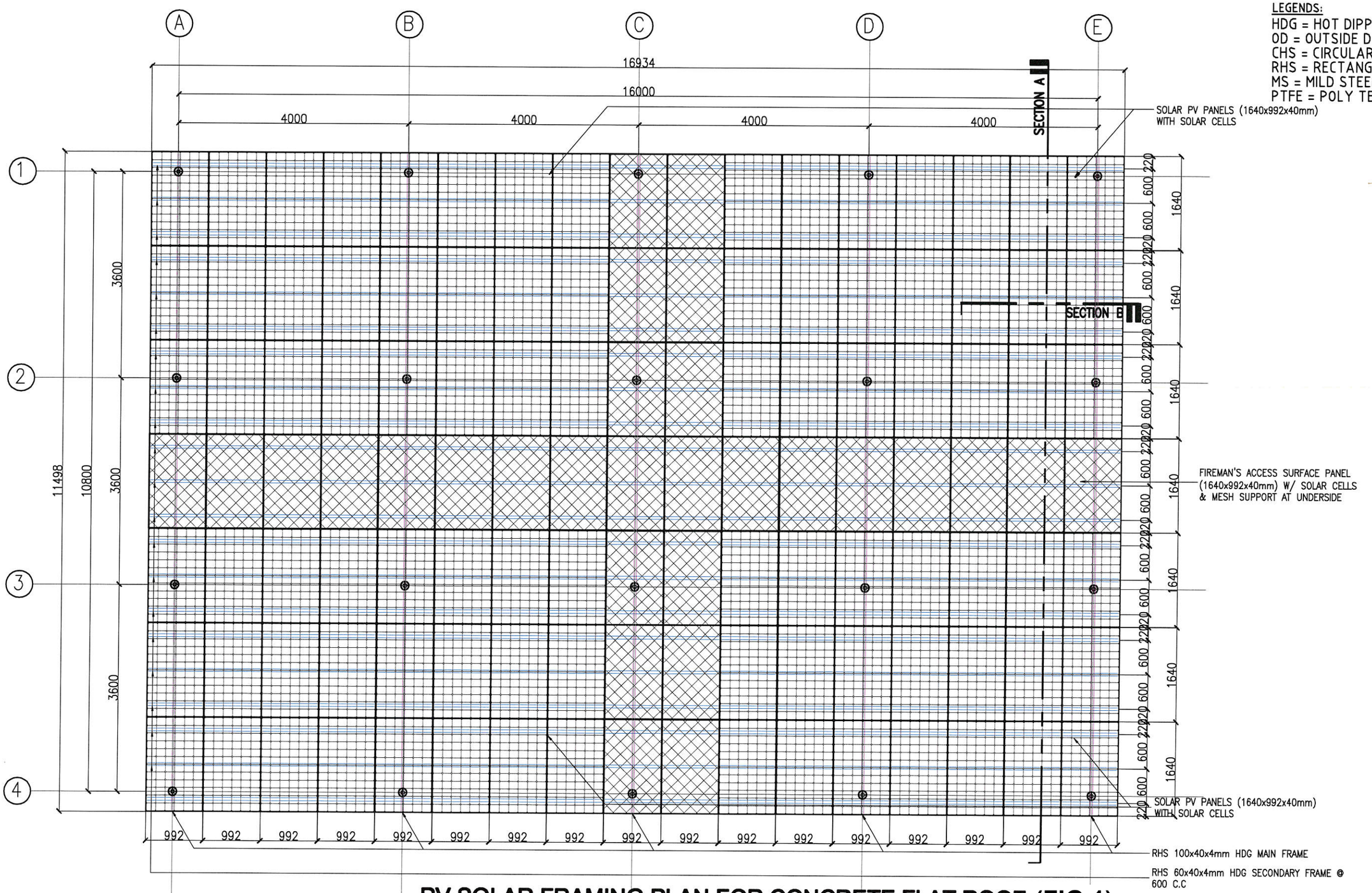

LEGENDS:
HDG = HOT DIPPED GALVANIZED
OD = OUTSIDE DIAMETER
CHS = CIRCULAR HOLLOW SECTION
RHS = RECTANGULAR HOLLOW SECTION
MS = MILD STEEL
PTFE = POLY TETRA FLUORO ETHYLENE

PV SOLAR FRAMING PLAN FOR CONCRETE FLAT ROOF (FIG.1)

DRAWING NO.: 01

LEGENDS:
HDG = HOT DIPPED GALVANIZED
OD = OUTSIDE DIAMETER
CHS = CIRCULAR HOLLOW SECTION
RHS = RECTANGULAR HOLLOW SECTION
MS = MILD STEEL
PTFE = POLY TETRA FLUORO ETHYLENE

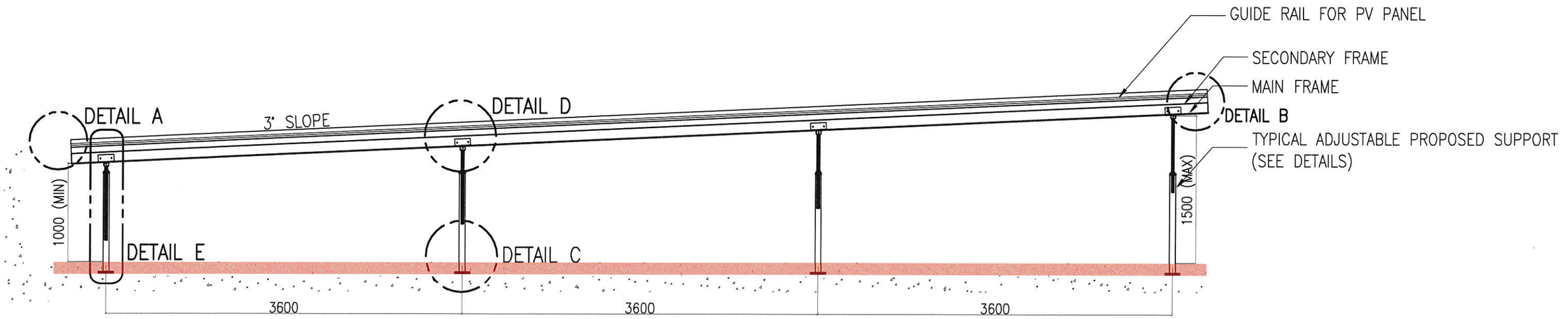

SECTION A (SECTIONAL VIEW OF ROOF) (FIG.2)

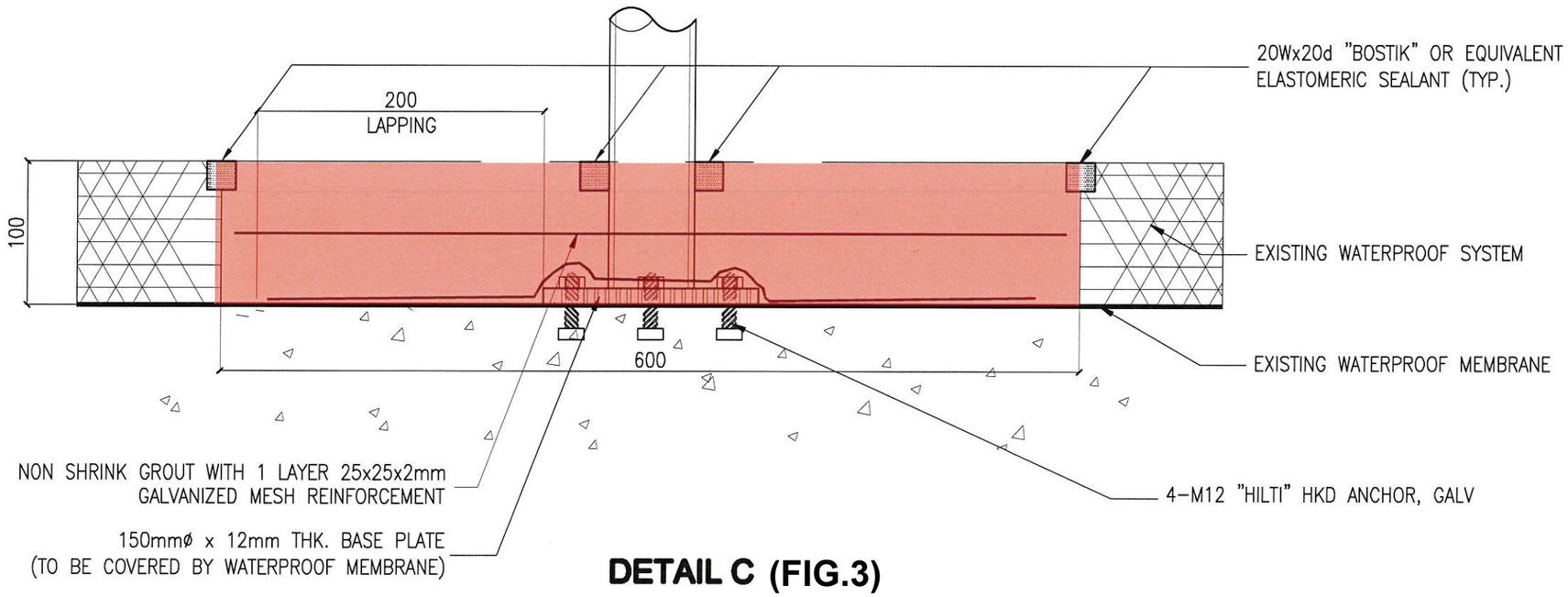

DETAIL C (FIG.3)

DRAWING NO.: 02

LEGENDS:
HDG = HOT DIPPED GALVANIZED
OD = OUTSIDE DIAMETER
CHS = CIRCULAR HOLLOW SECTION
RHS = RECTANGULAR HOLLOW SECTION
MS = MILD STEEL
PTFE = POLY TETRA FLUORO ETHYLENE

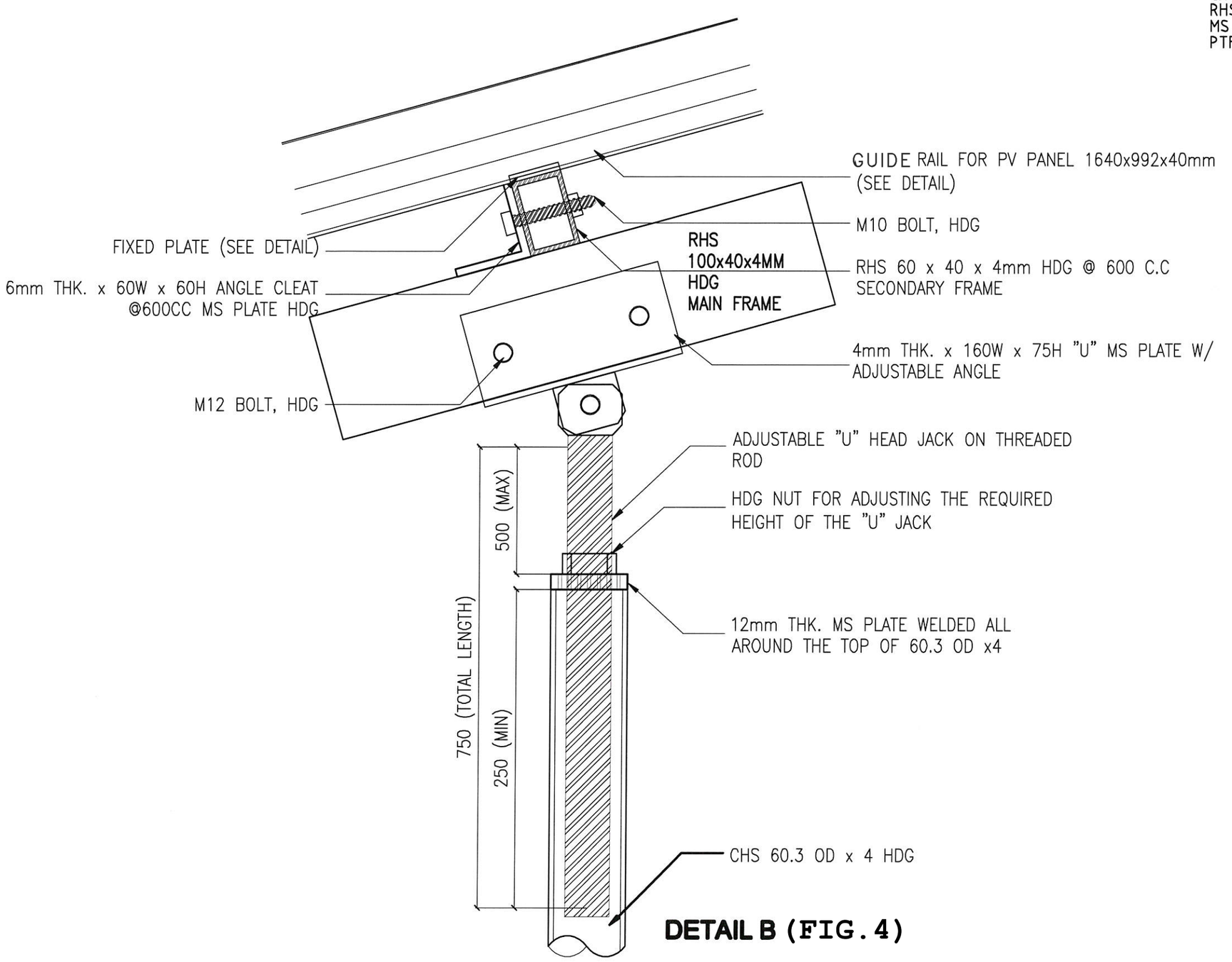

DETAIL B (FIG. 4)

DRAWING NO.: 03

LEGENDS:
HDG = HOT DIPPED GALVANIZED
OD = OUTSIDE DIAMETER
CHS = CIRCULAR HOLLOW SECTION
RHS = RECTANGULAR HOLLOW SECTION
MS = MILD STEEL
PTFE = POLY TETRA FLUORO ETHYLENE

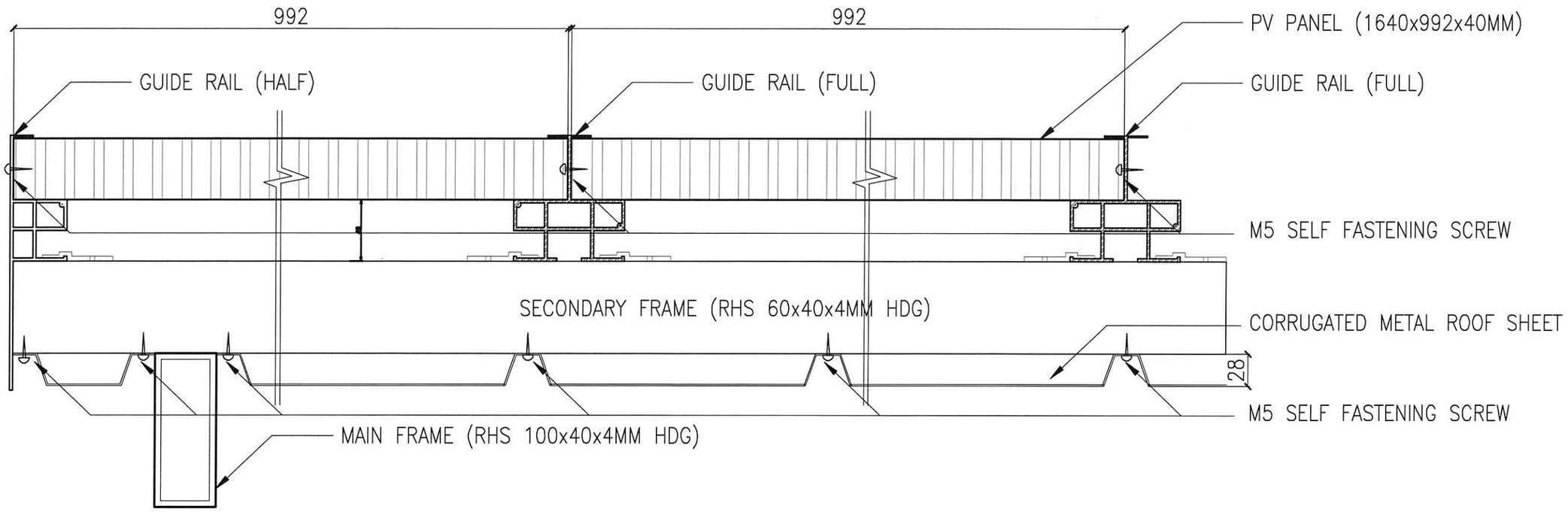

SECTION B (FIG.5)

DRAWING NO.: 04

LEGENDS:

HDG = HOT DIPPED GALVANIZED
OD = OUTSIDE DIAMETER
CHS = CIRCULAR HOLLOW SECTION
RHS = RECTANGULAR HOLLOW SECTION
MS = MILD STEEL
PTFE = POLY TETRA FLUORO ETHYLENE

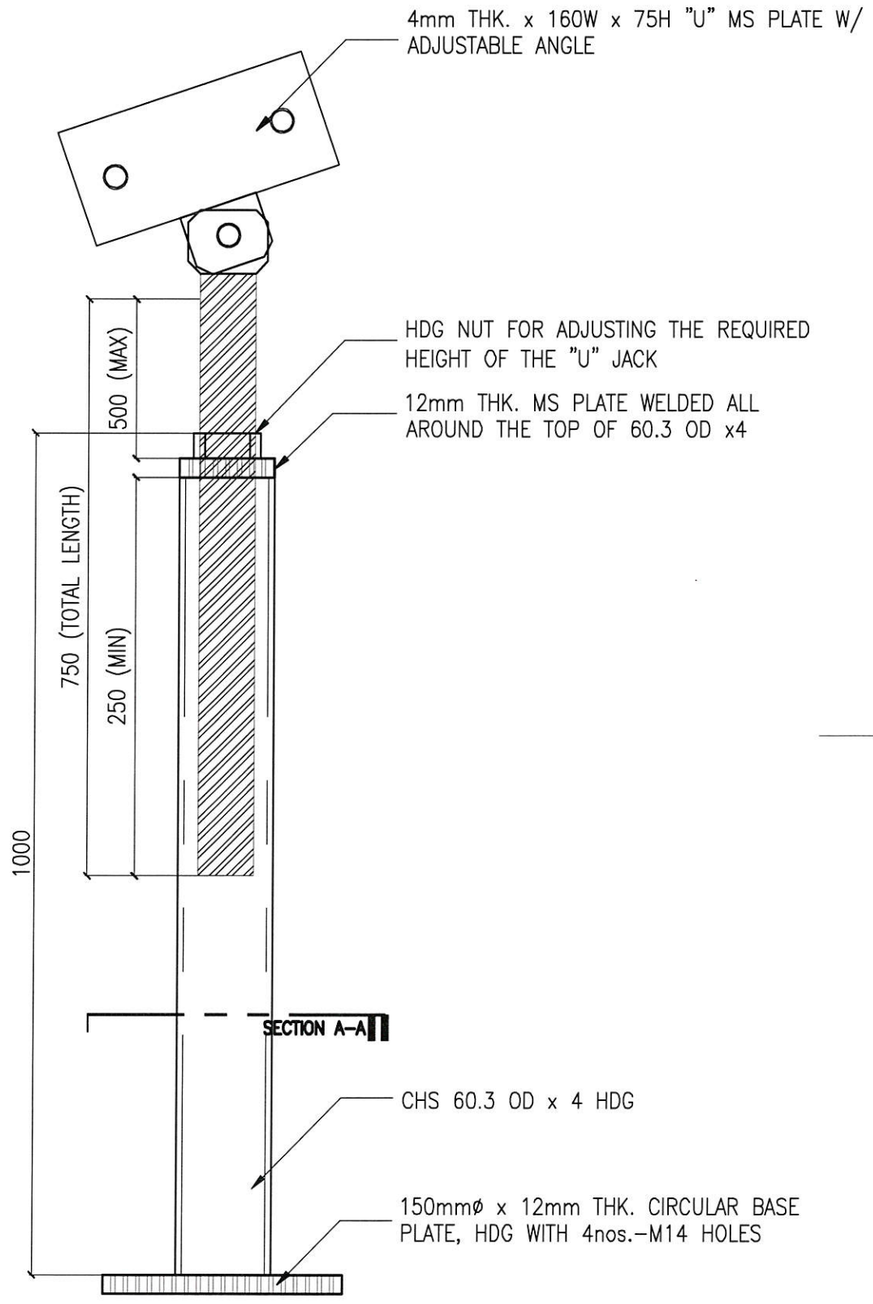

DETAIL E (FIG.6)

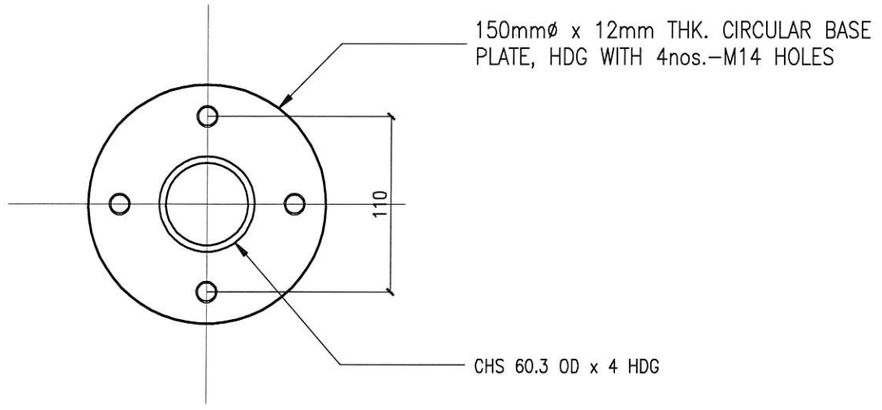

SECTION A-A (FIG.7)

DRAWING NO.: 05

LEGENDS:
HDG = HOT DIPPED GALVANIZED
OD = OUTSIDE DIAMETER
CHS = CIRCULAR HOLLOW SECTION
RHS = RECTANGULAR HOLLOW SECTION
MS = MILD STEEL
PTFE = POLY TETRA FLUORO ETHYLENE

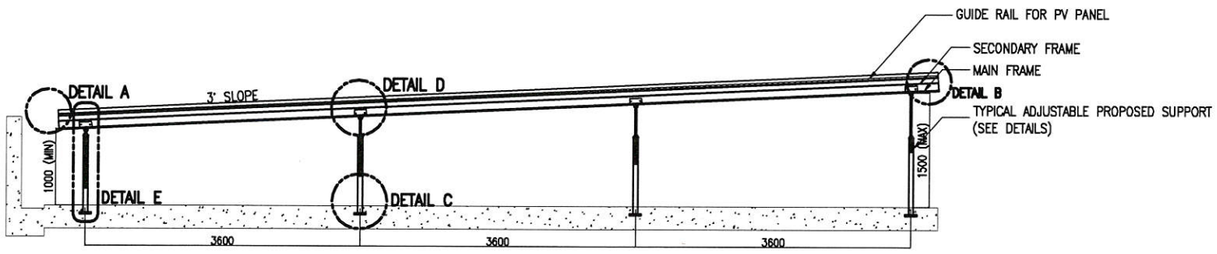

SECTION A (FIG.2)
SCALE 1 : 40

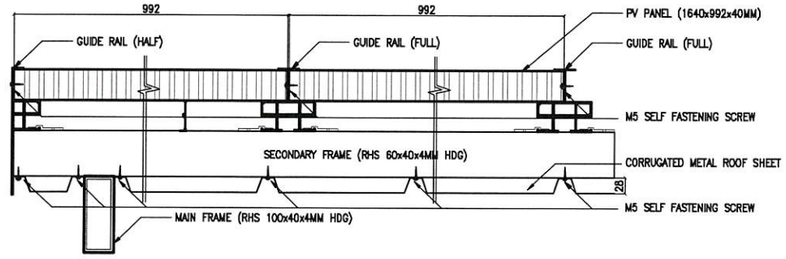

SECTION B (FIG.5)
SCALE 1 : 4

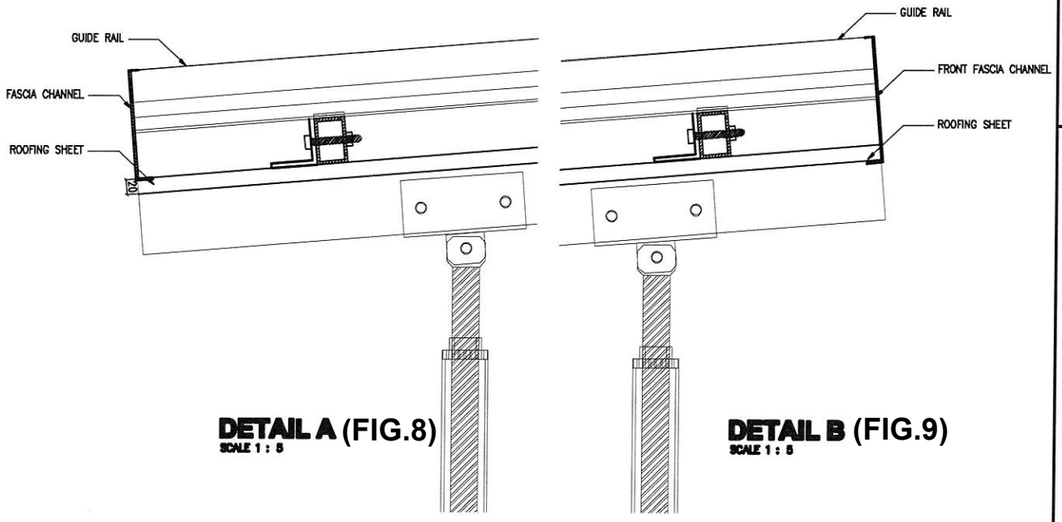

DETAIL A (FIG.8)
SCALE 1 : 5

DETAIL B (FIG.9)
SCALE 1 : 5

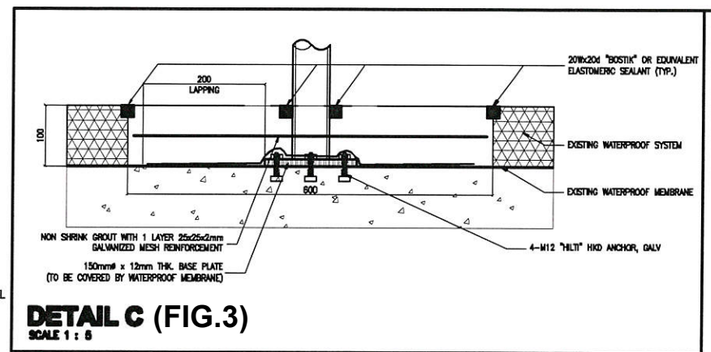

DETAIL C (FIG.3)
SCALE 1 : 5

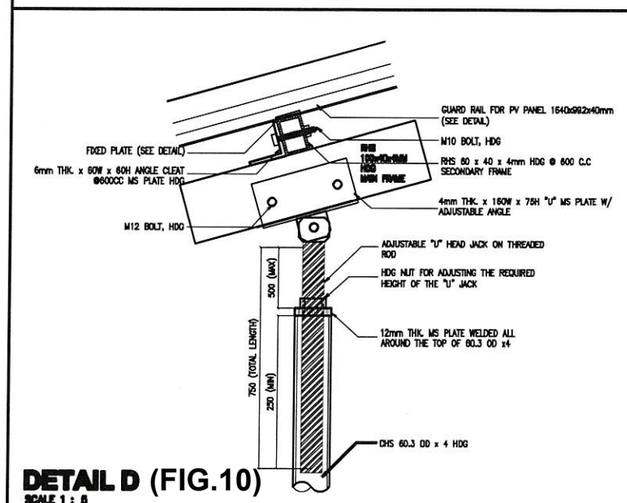

DETAIL D (FIG.10)
SCALE 1 : 5

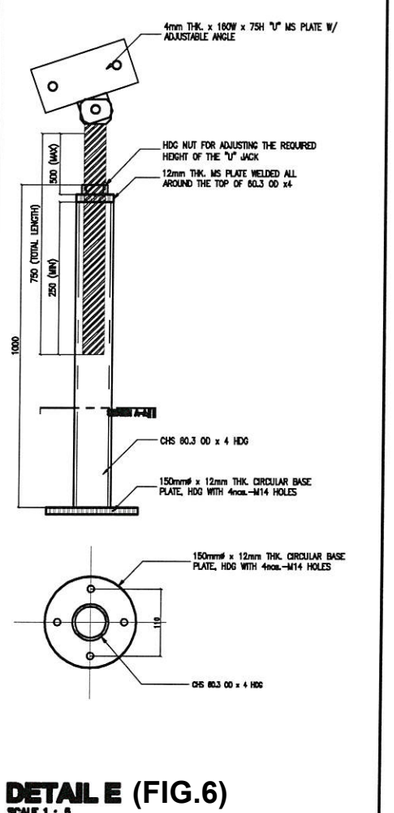

DETAIL E (FIG.6)
SCALE 1 : 5

DRAWING NO.: 06

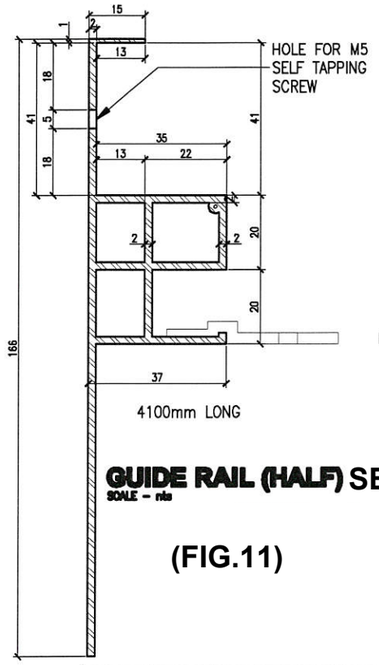

GUIDE RAIL (HALF) SECTION
SCALE – nts

(FIG.11)

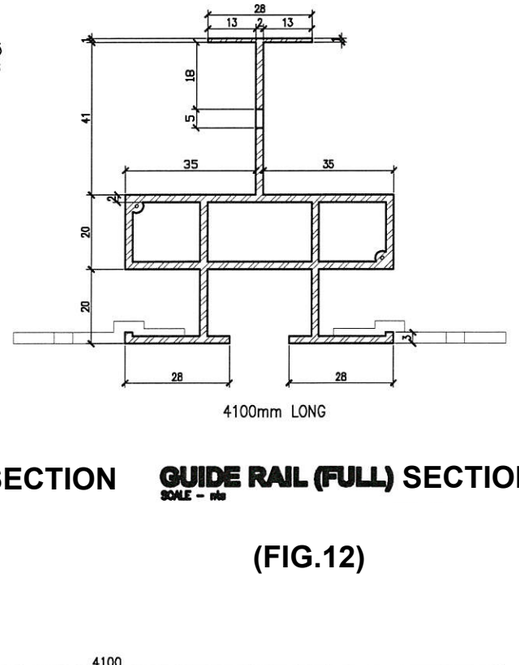

GUIDE RAIL (FULL) SECTION
SCALE – nts

(FIG.12)

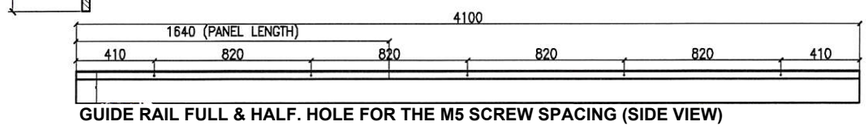

GUIDE RAIL FULL & HALF. HOLE FOR THE M5 SCREW SPACING (SIDE VIEW)

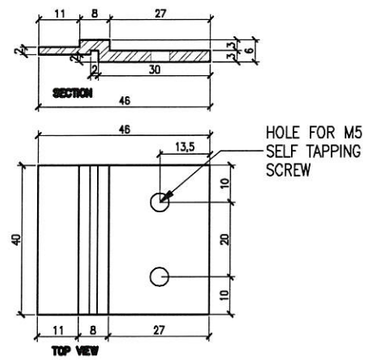

FIXED PLATE (FIG.13)
SCALE – nts

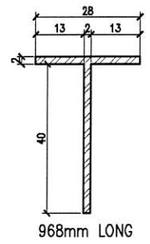

STATIONARY FLAT (FIG.14)
SCALE – nts

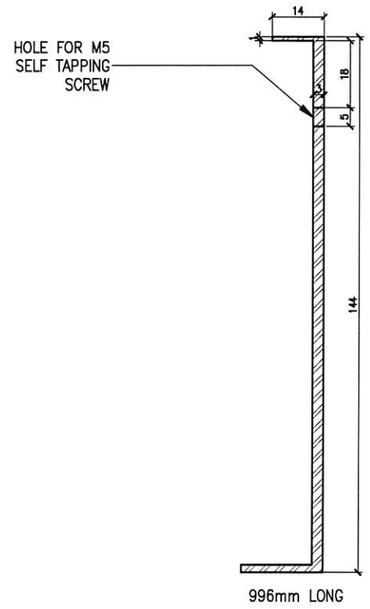

REAR FACE FASCIA SECTION
(FIG.15)

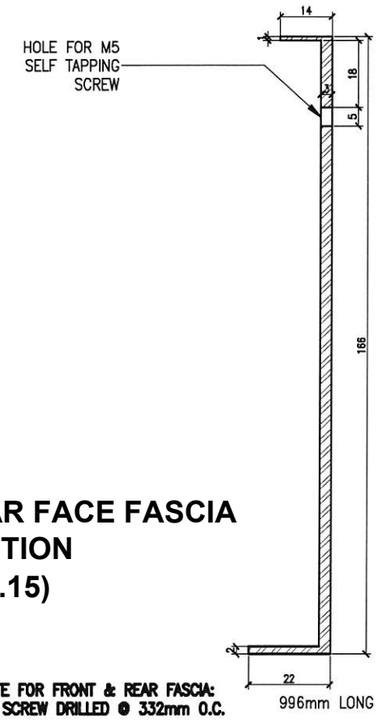

FRONT FACE FASCIA SECTION
(FIG.16)

NOTE FOR FRONT & REAR FASCIA:
M5 SCREW DRILLED @ 332mm O.C.

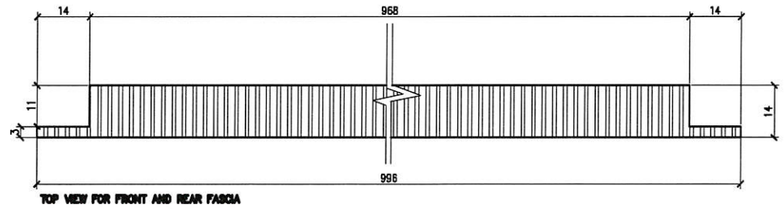

REAR FACE FASCIA (FIG.15)
SCALE – nts

FRONT FACE FASCIA (FIG.16)
SCALE – nts

LEGENDS:
HDG = HOT DIPPED GALVANIZED
OD = OUTSIDE DIAMETER
CHS = CIRCULAR HOLLOW SECTION
RHS = RECTANGULAR HOLLOW SECTION
MS = MILD STEEL
PTFE = POLY TETRA FLUORO ETHYLENE

LEGENDS:

HDG = HOT DIPPED GALVANIZED
OD = OUTSIDE DIAMETER
CHS = CIRCULAR HOLLOW SECTION
RHS = RECTANGULAR HOLLOW SECTION
MS = MILD STEEL
PTFE = POLY TETRA FLUORO ETHYLENE

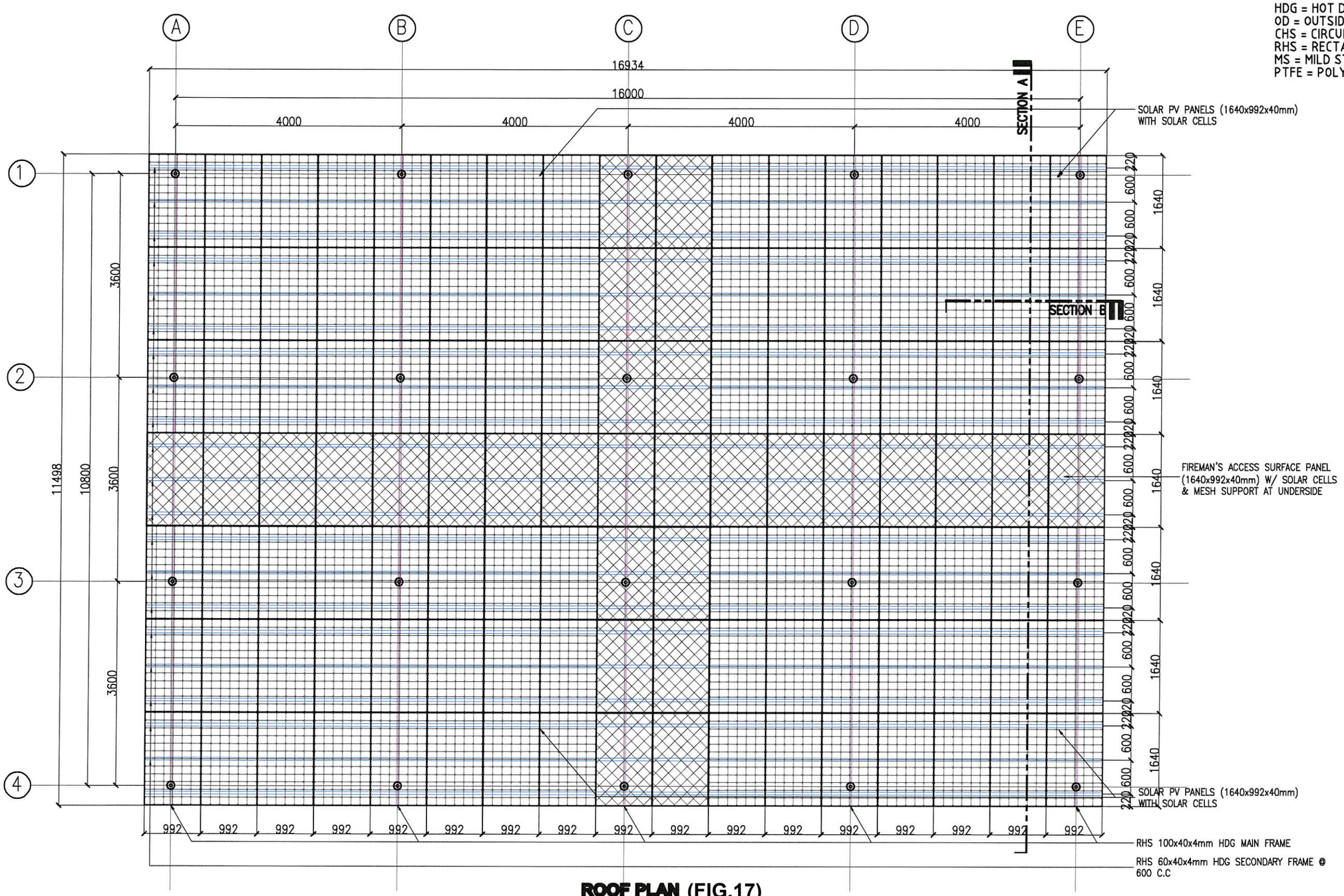

ROOF PLAN (FIG.17)
SCALE – nts

DRAWING NO.: 08

LEGENDS:

HDG = HOT DIPPED GALVANIZED
OD = OUTSIDE DIAMETER
CHS = CIRCULAR HOLLOW SECTION
RHS = RECTANGULAR HOLLOW SECTION
MS = MILD STEEL
PTFE = POLY TETRA FLUORO ETHYLENE

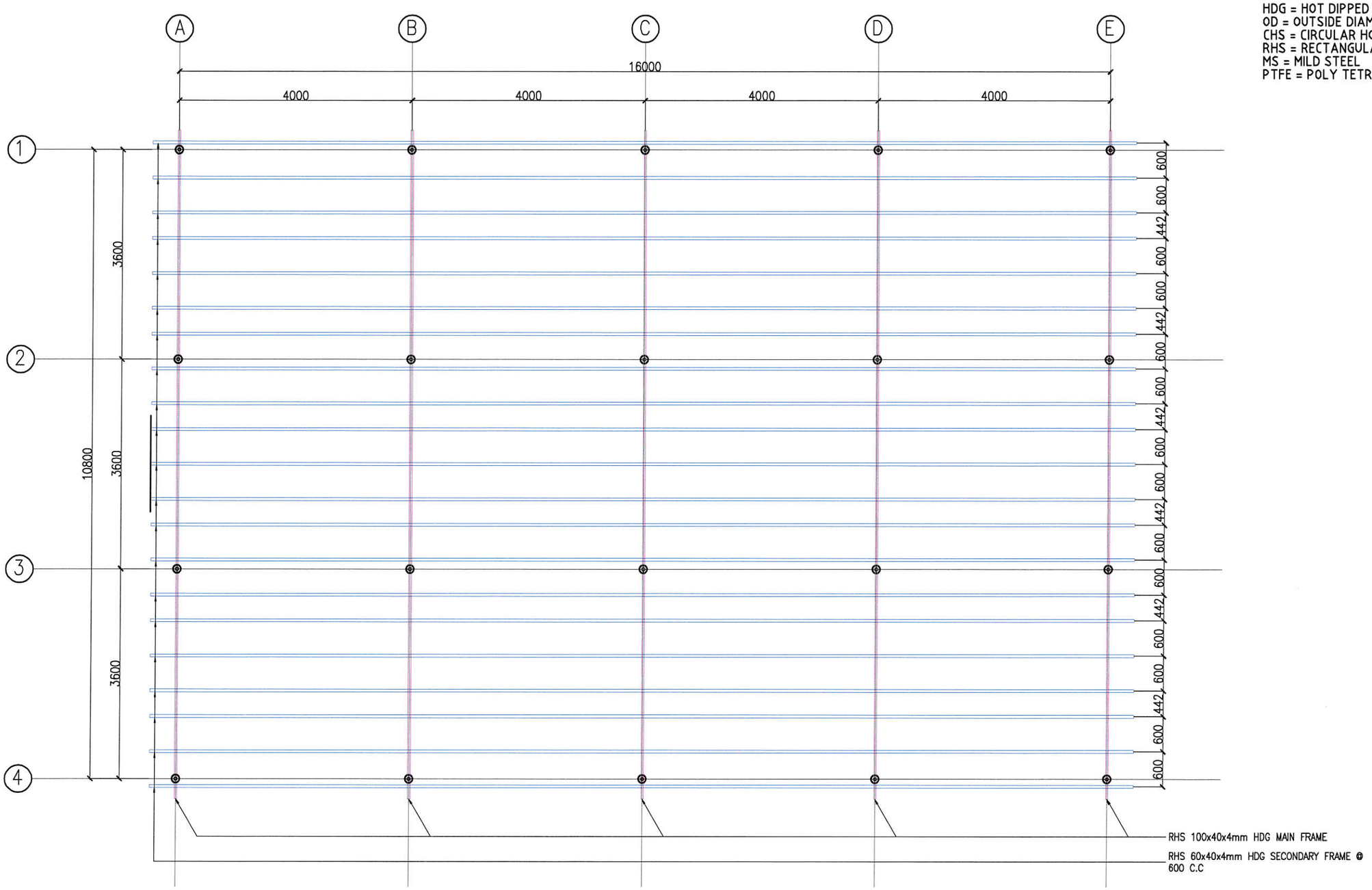

ROOF FRAMING PLAN (FIG.18)
SCALE – nts

DRAWING NO.: 09

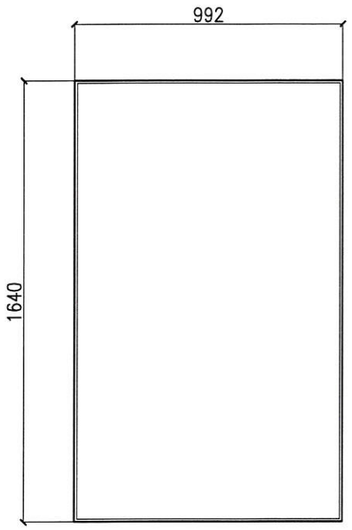

DUMMY PANEL W/O SOLAR CELLS
(1640X992mm)
FOR SHADED AND NO SUNLIGHT AREA
OF THE ROOFING

(FIG.19)

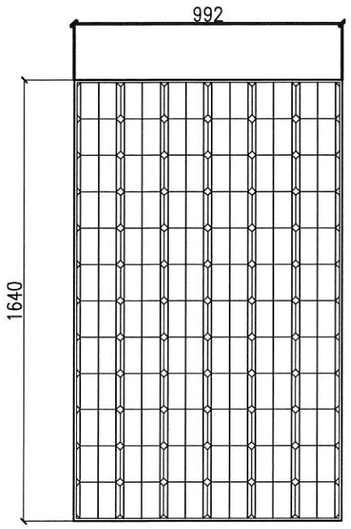

SOLAR PV PANEL (1640X992mm)
W/ SOLAR CELLS

(FIG.20)

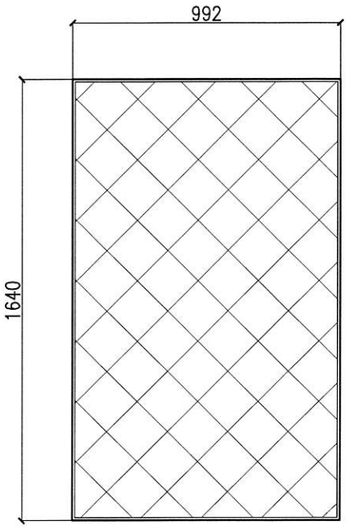

FIREMAN'S ACCESS
SURFACE PANEL (1640X992mm) W/ SOLAR CELLS &
MESH SUPPORT AT UNDERSIDE

(FIG.21)

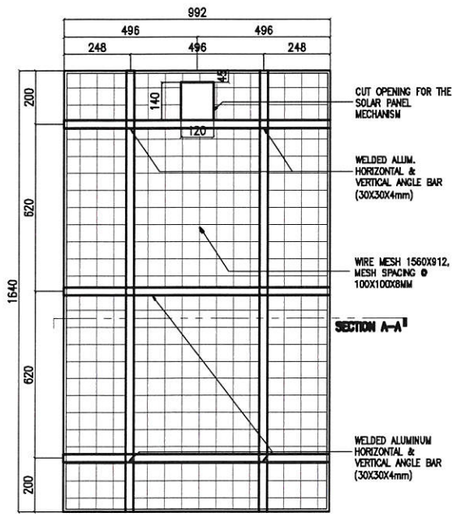

FIREMAN'S ACCESS SURFACE PANEL
FRAMING PLAN

(FIG.22)

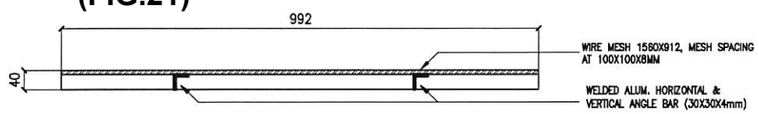

SECTION A-A

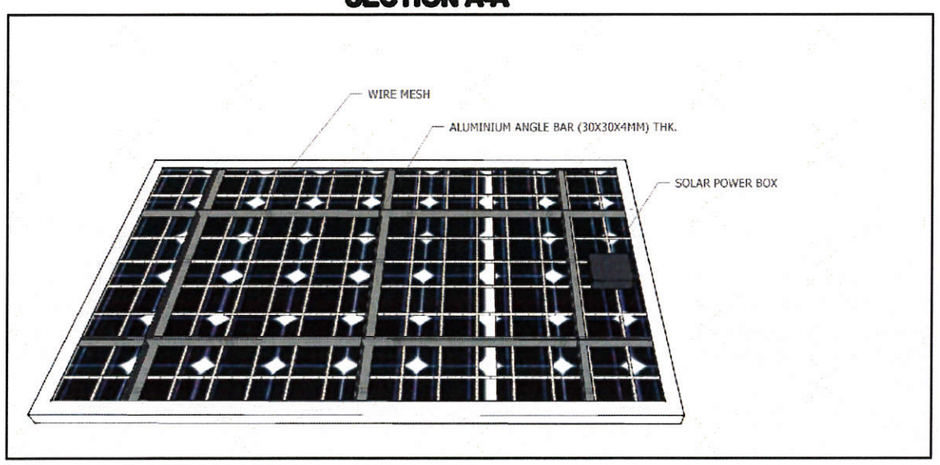

BOTTOM VIEW ILLUSTRATION OF ADDITIONAL SUPPORT (FIG.23)

LEGENDS:

HDG = HOT DIPPED GALVANIZED
OD = OUTSIDE DIAMETER
CHS = CIRCULAR HOLLOW SECTION
RHS = RECTANGULAR HOLLOW SECTION
MS = MILD STEEL
PTFE = POLY TETRA FLUORO ETHYLENE