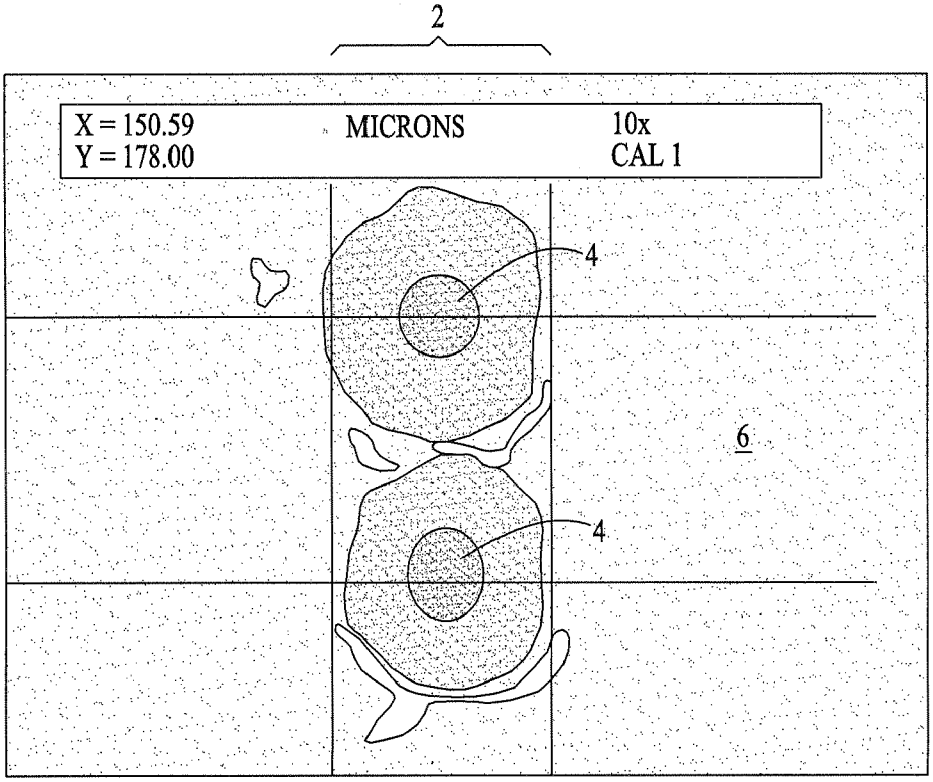

FIG. 1
PRIOR ART

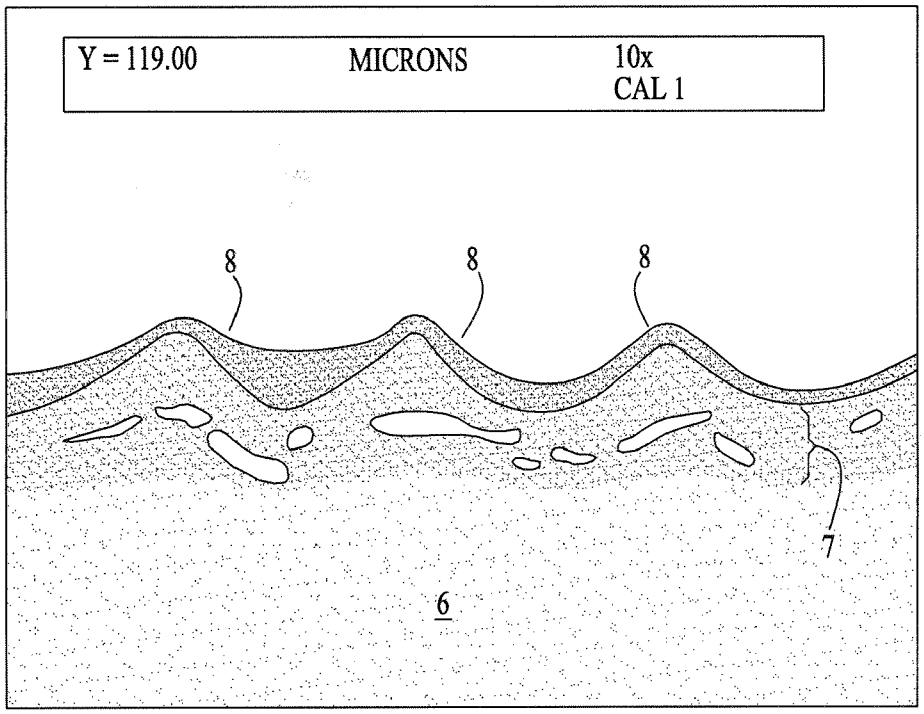

FIG. 2
PRIOR ART

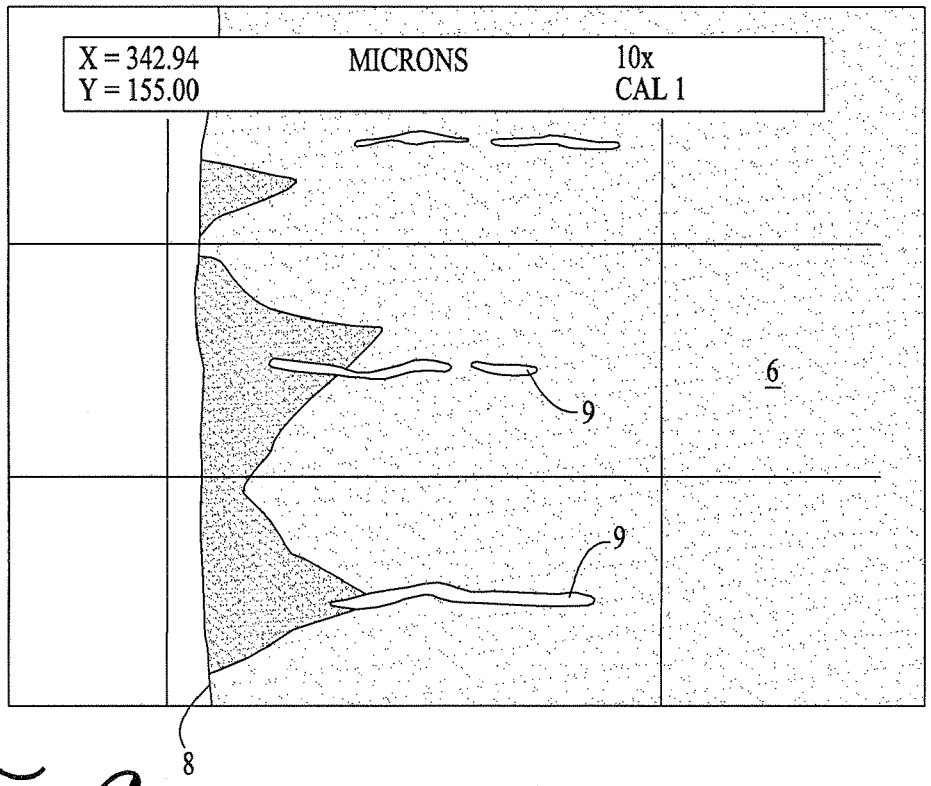

FIG. 3A
PRIOR ART

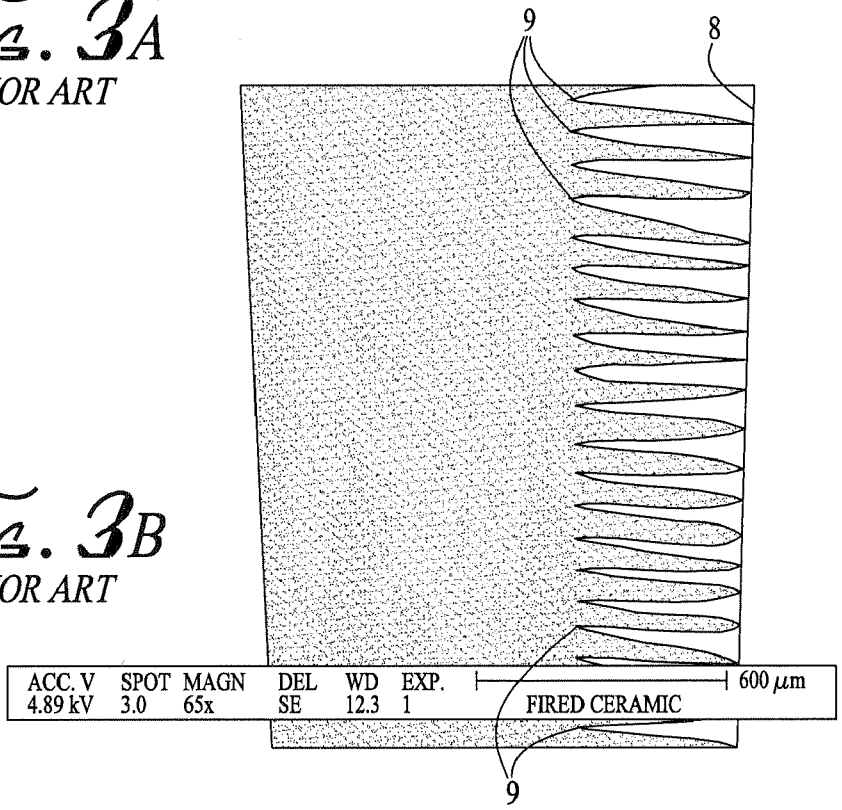

FIG. 3B
PRIOR ART

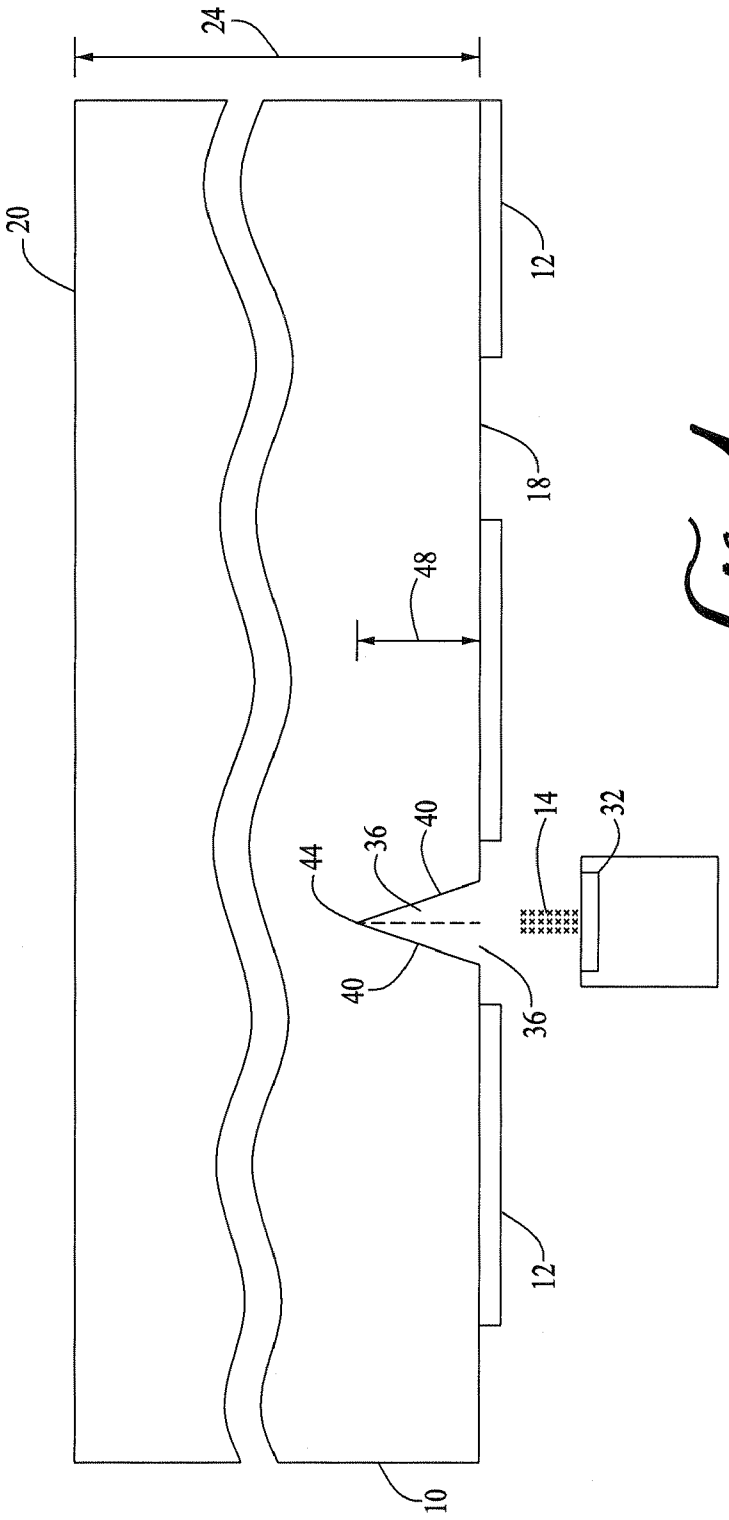

FIG. 4

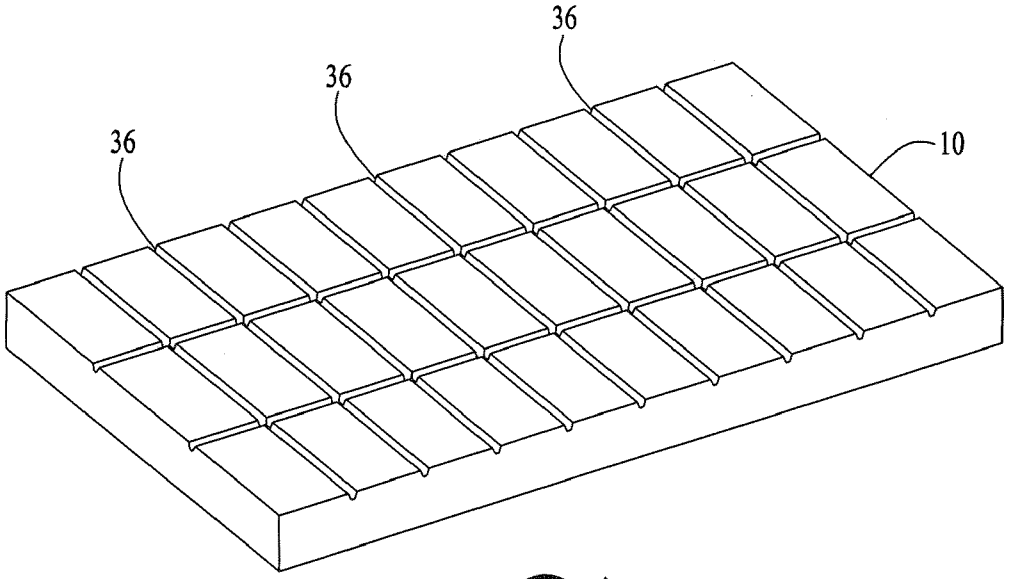

FIG. 5A

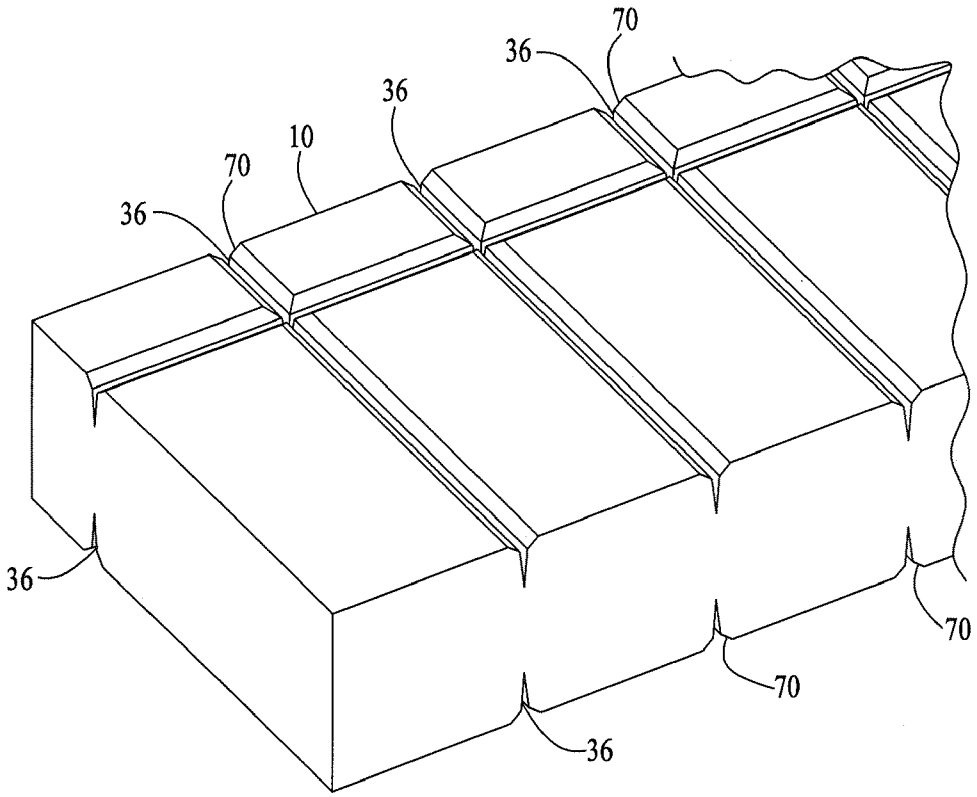

FIG. 5B

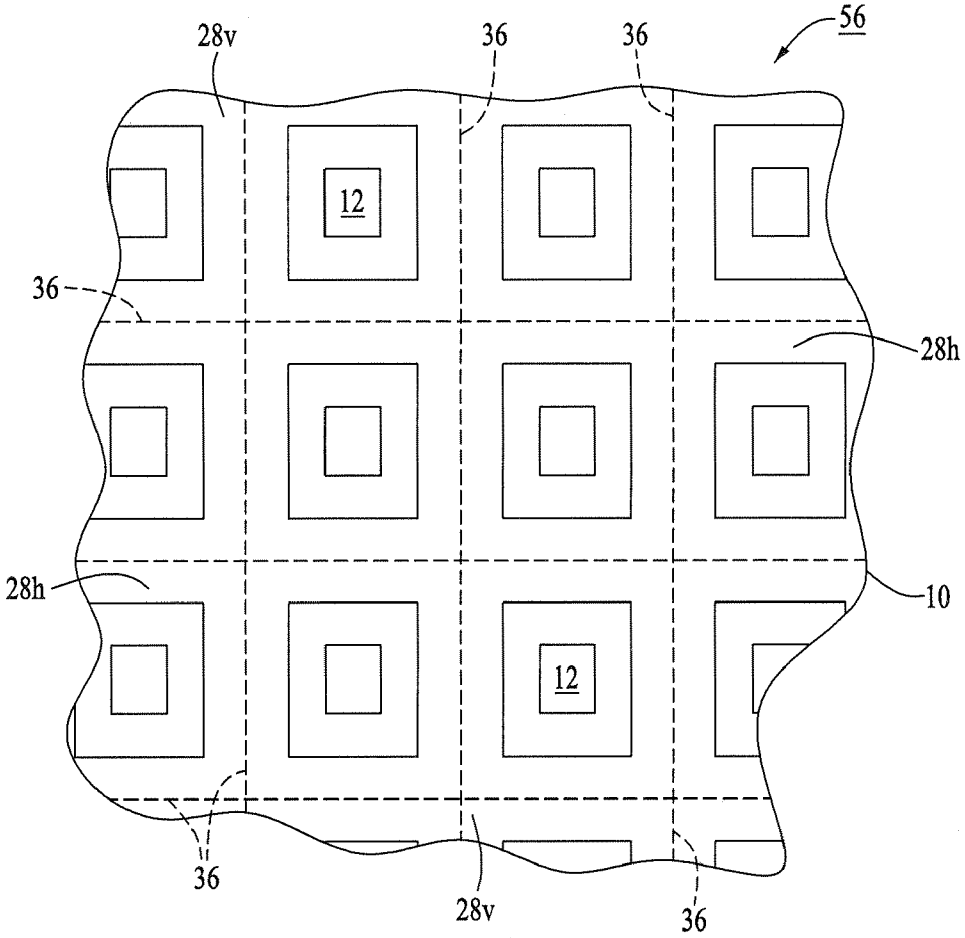

FIG. 6

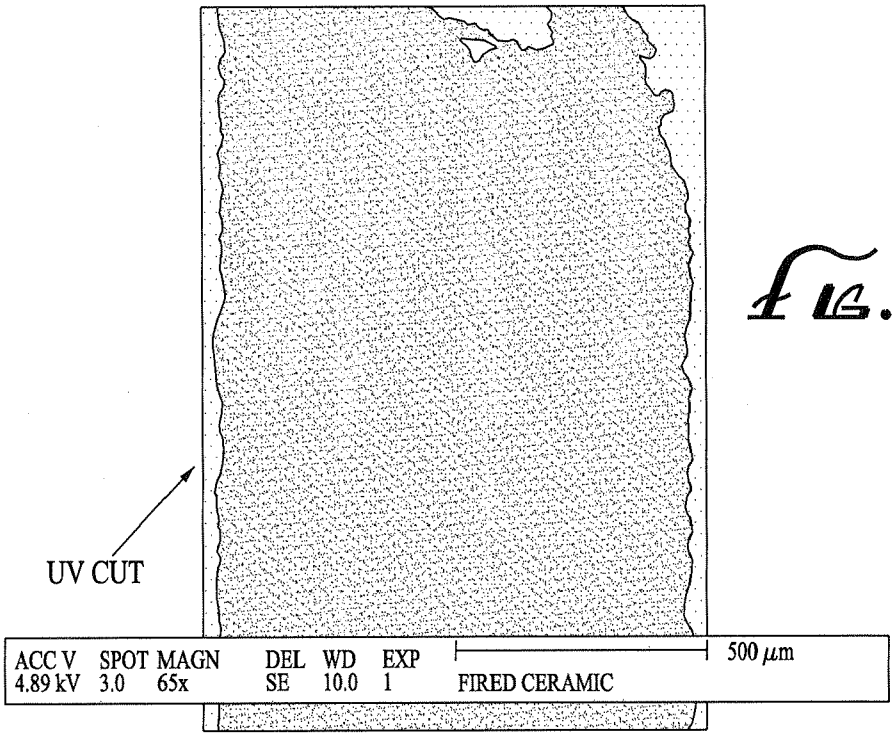
UV CUT
ACC V SPOT MAGN DEL WD EXP
4.89 kV 3.0 65x SE 10.0 1
500 μm
FIRED CERAMIC

FIG. 7

FIG. 11

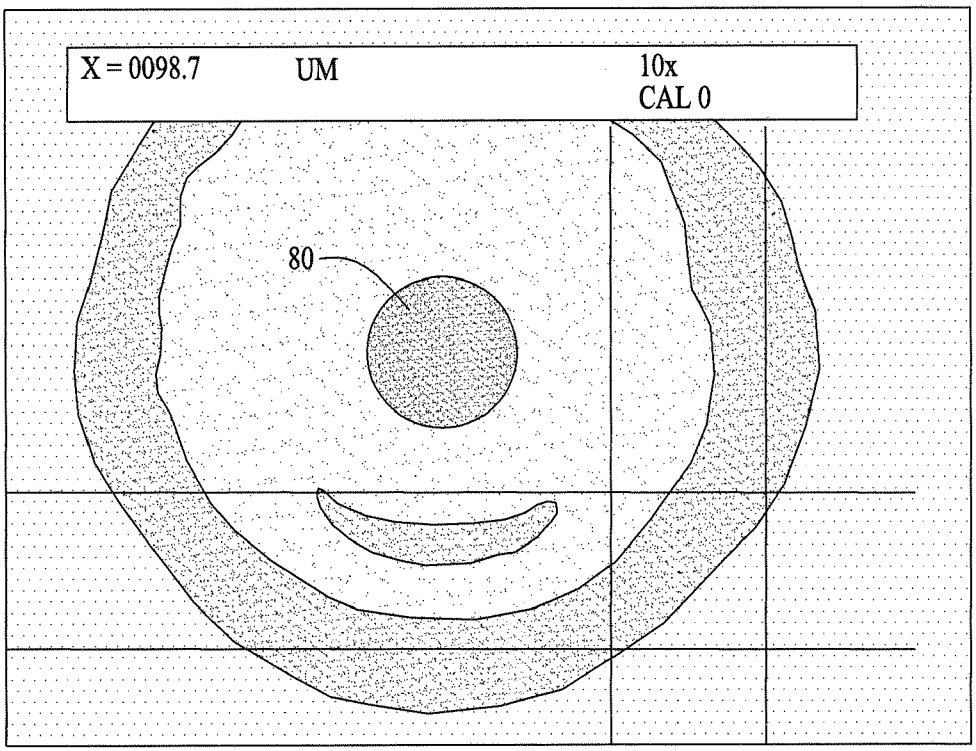
X = 0098.7 UM
10x
CAL 0
80

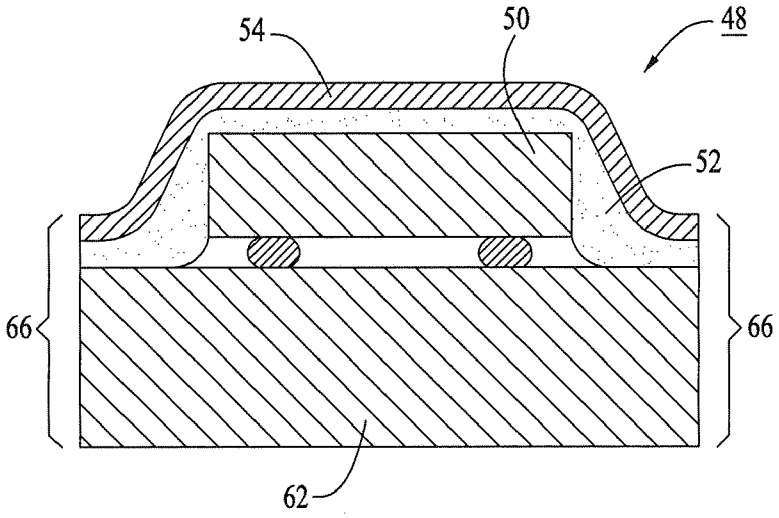

FIG. 8

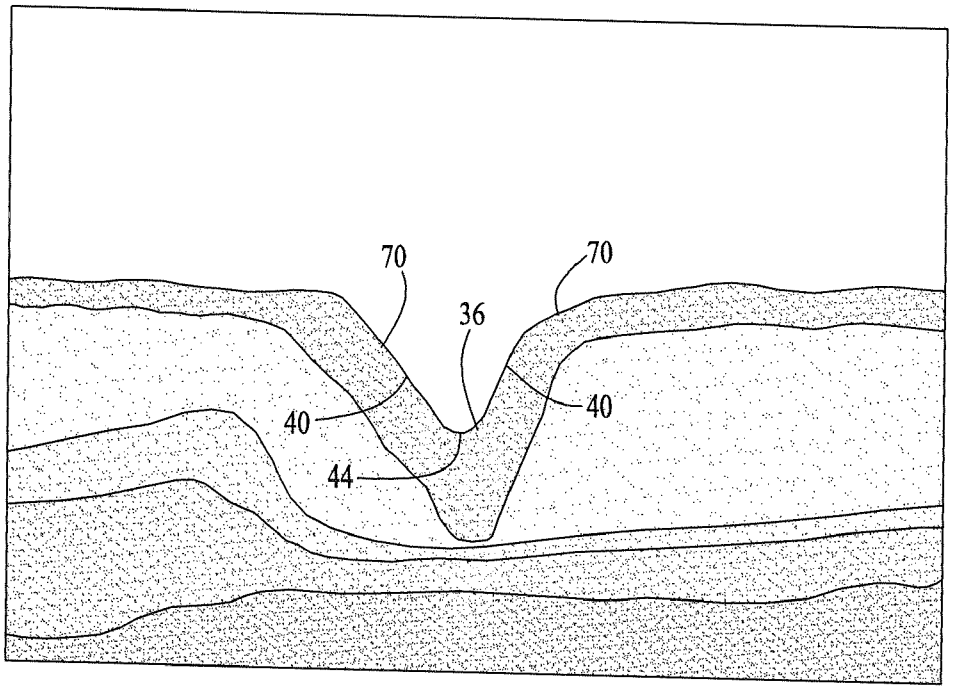

FIG. 9

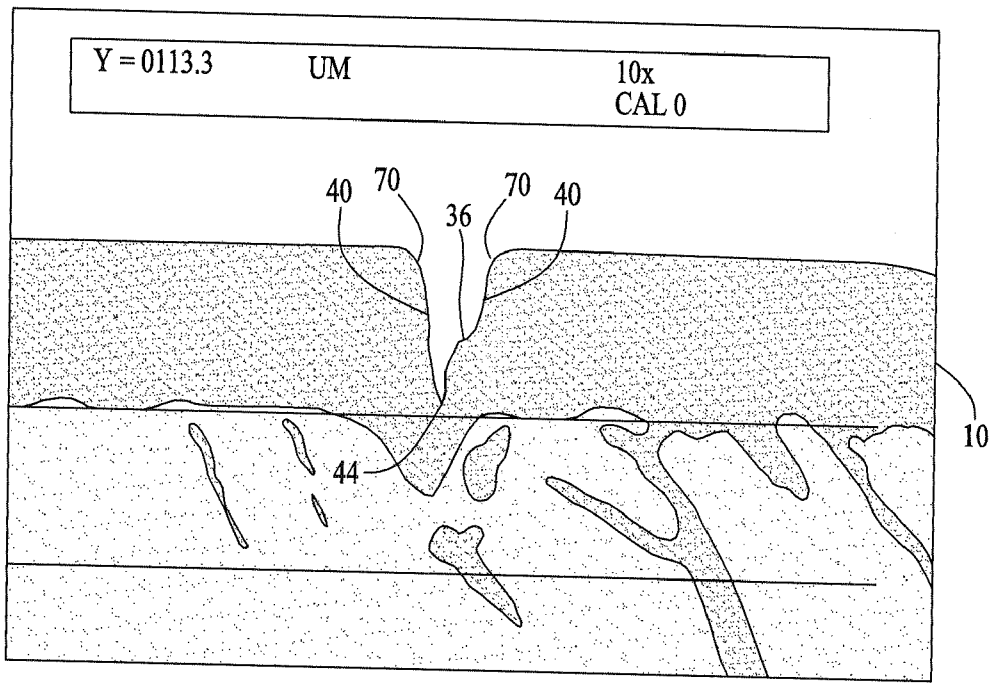

FIG. 10