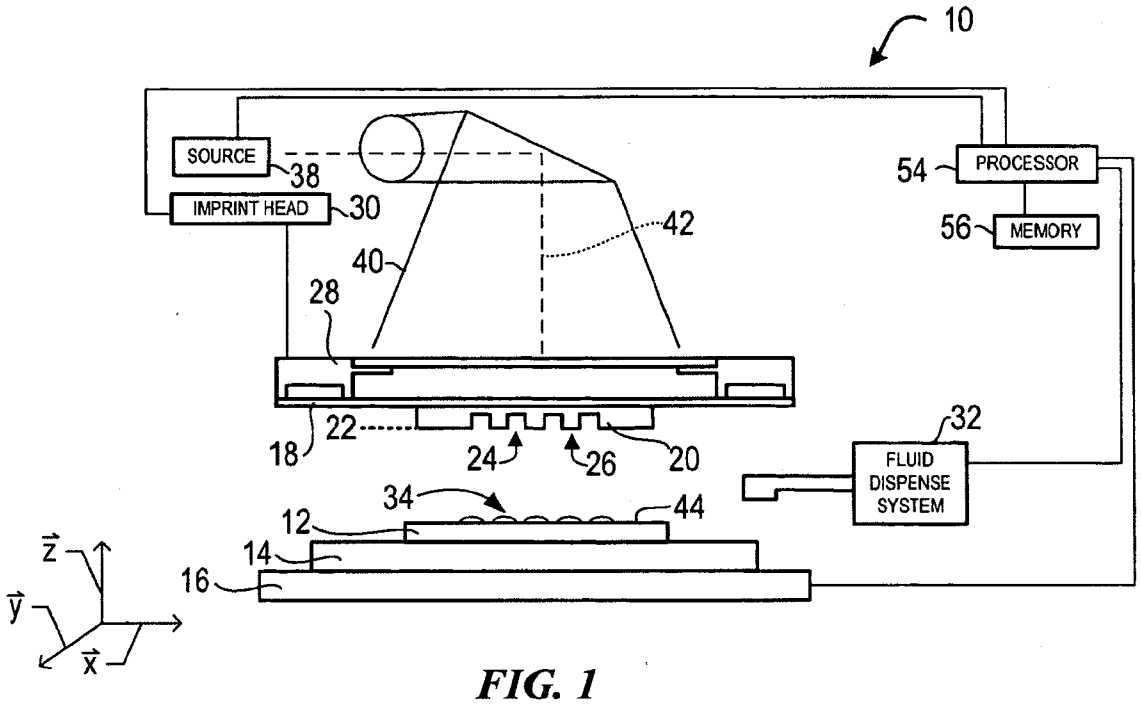
10
SOURCE
38
IMPRINT HEAD
30
54
PROCESSOR
56
MEMORY
42
40
28
18
22
24
26
20
32
FLUID
DISPENSE
SYSTEM
34
44
12
14
16
z
y
x

FIG. 1

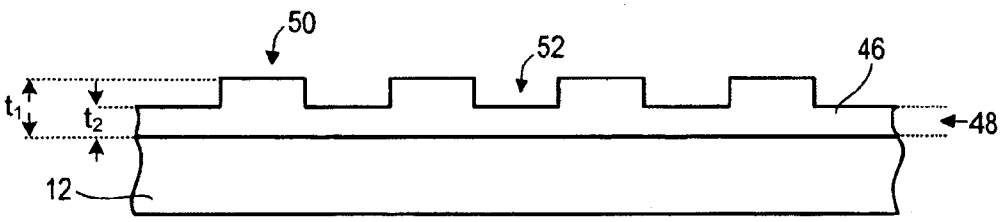
50
52
46
t1
t2
48
12

FIG. 2

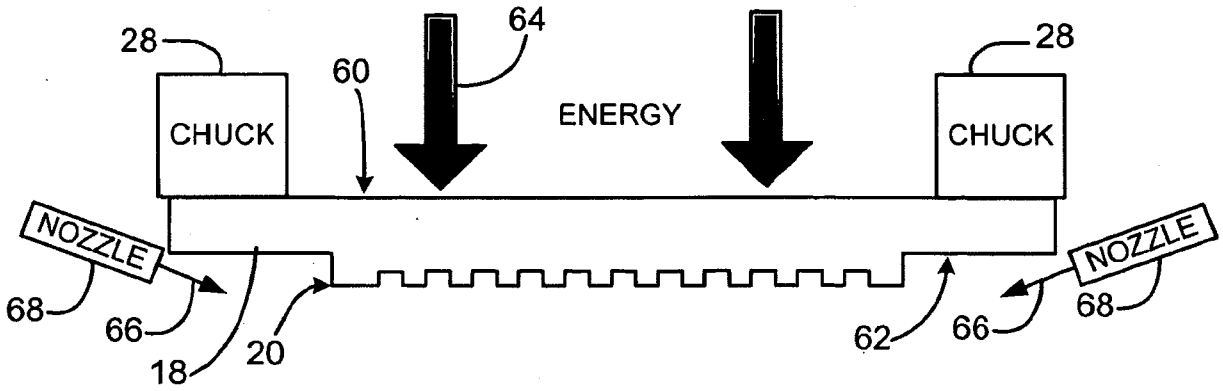
28
CHUCK
60
64
ENERGY
28
CHUCK
NOZZLE
68
66
18
20
62
66
NOZZLE
68

FIG. 3

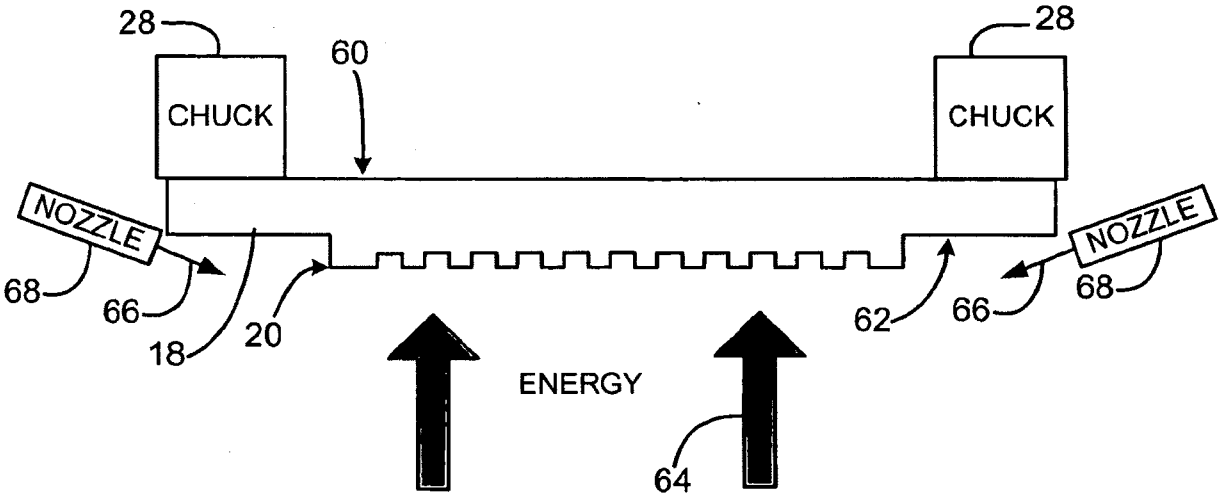
28
CHUCK
60
28
CHUCK
NOZZLE
68
66
18
20
62
66
NOZZLE
68
ENERGY
64

FIG. 4

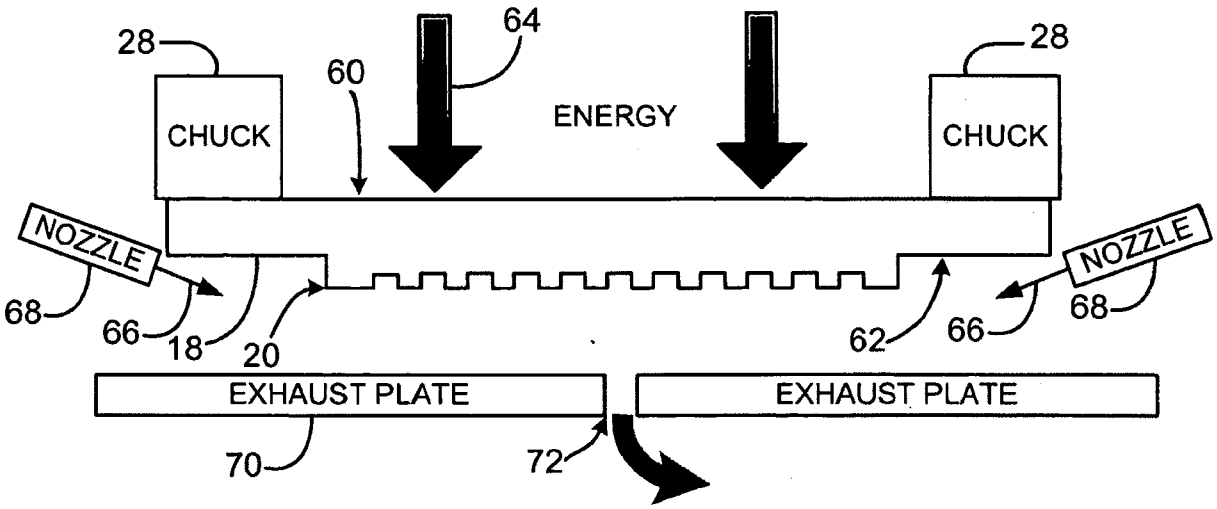
28
64
60
ENERGY
28
CHUCK
CHUCK
NOZZLE
NOZZLE
68
66
18
20
62
66
68
EXHAUST PLATE
EXHAUST PLATE
70
72

FIG. 5

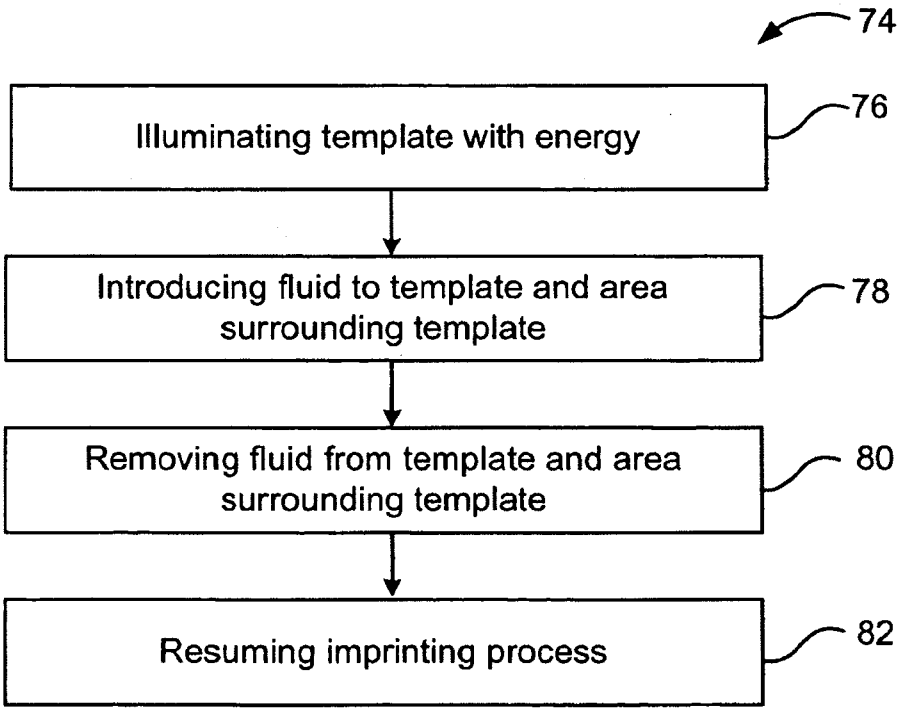
74
Illuminating template with energy
76
Introducing fluid to template and area surrounding template
78
Removing fluid from template and area surrounding template
80
Resuming imprinting process
82

FIG. 6

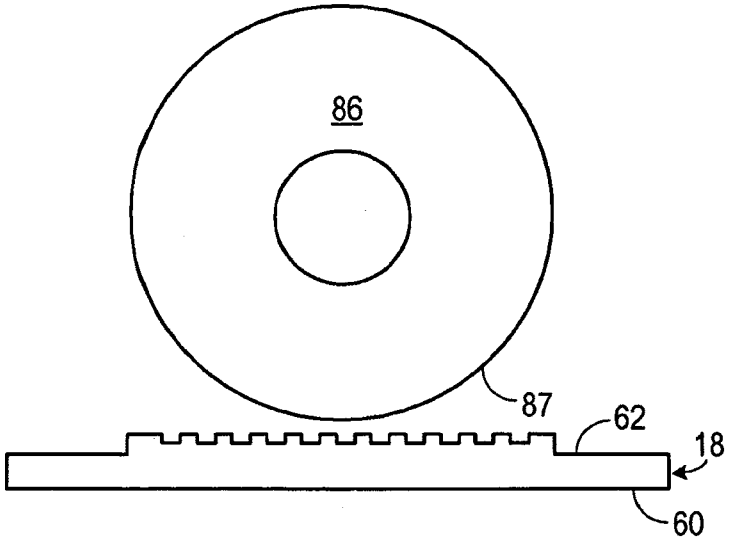

FIG. 7

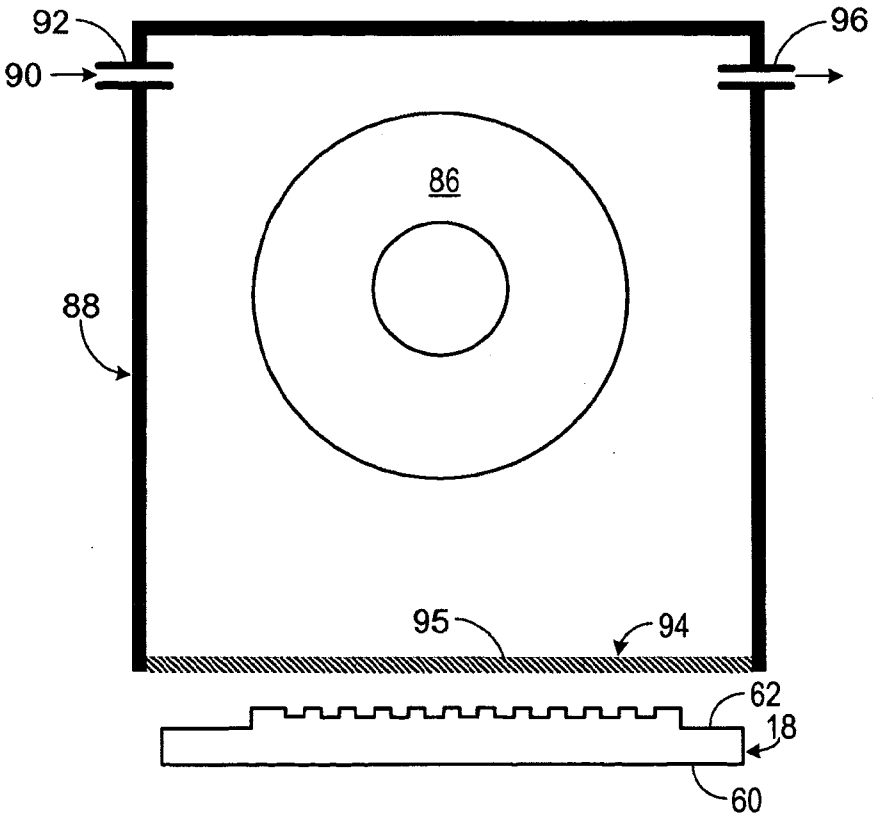

FIG. 8

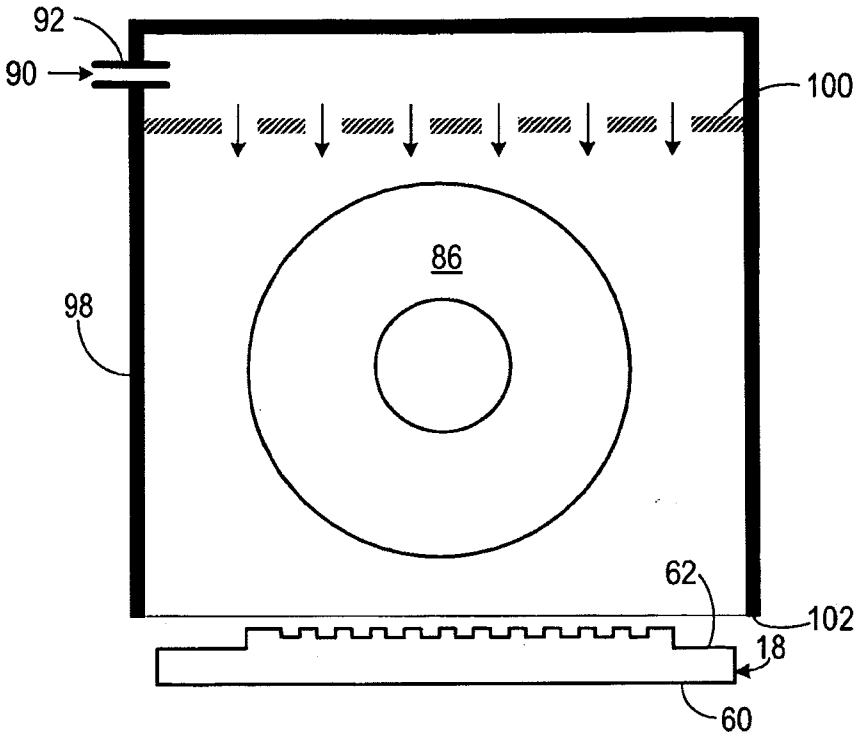

FIG. 9

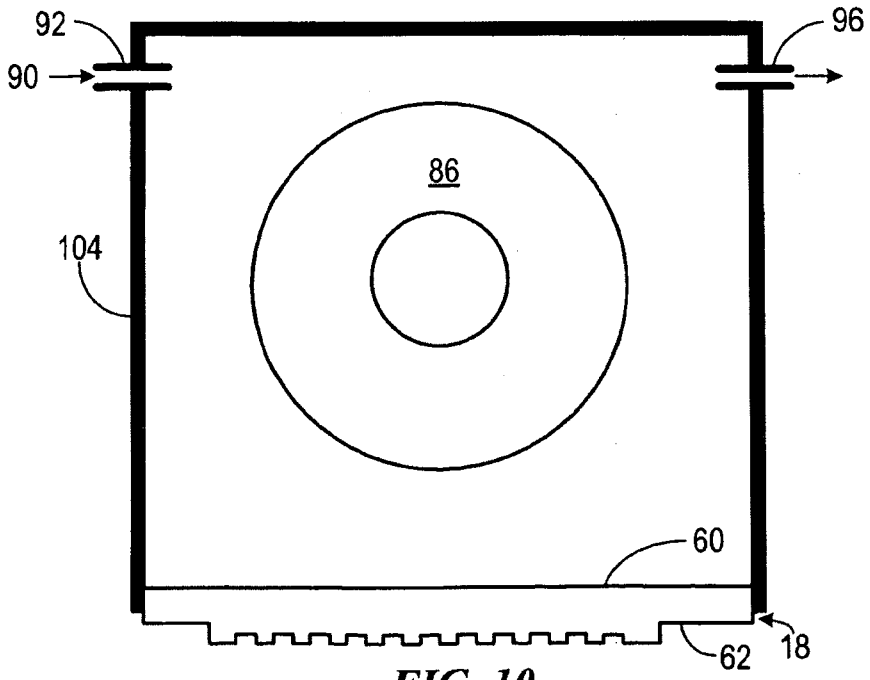

FIG. 10

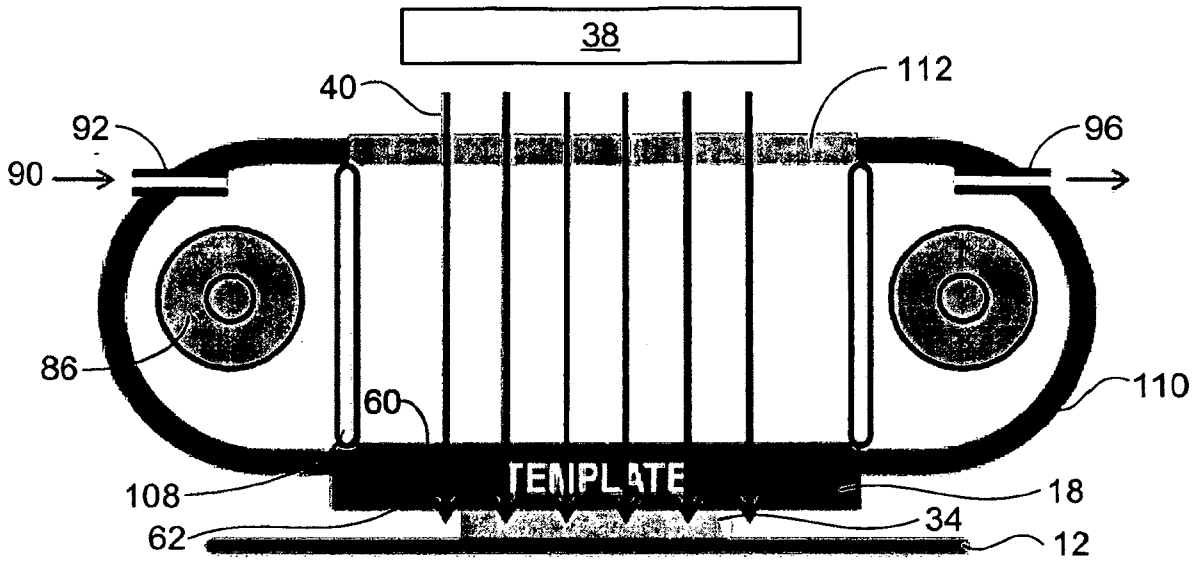

FIG. 11A

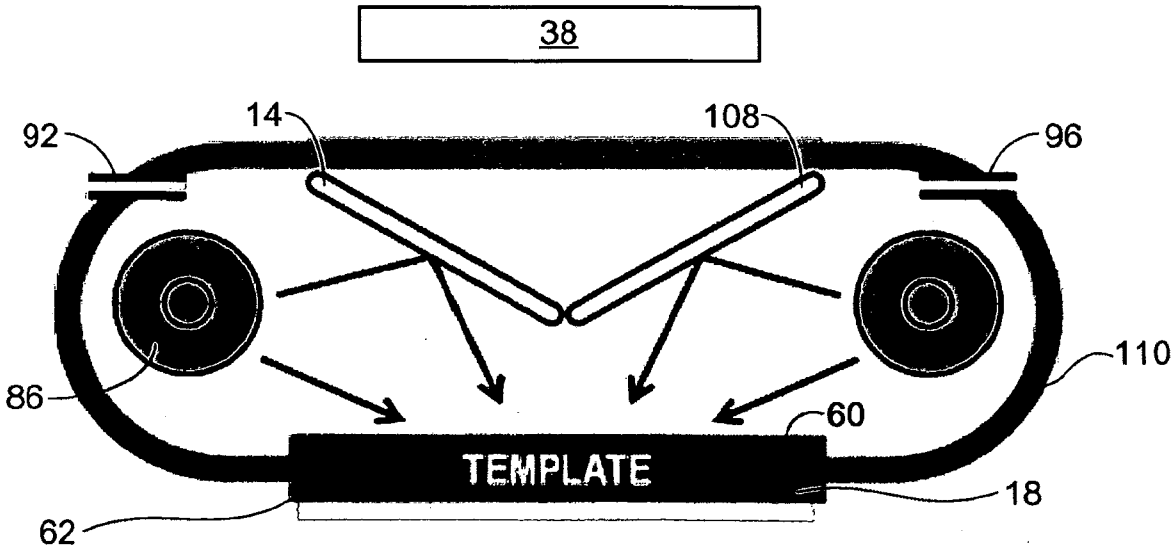

FIG. 11B

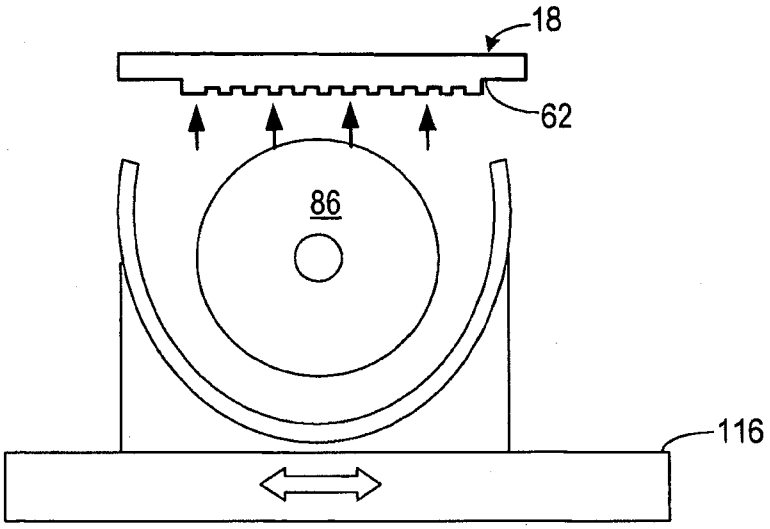

FIG. 12A

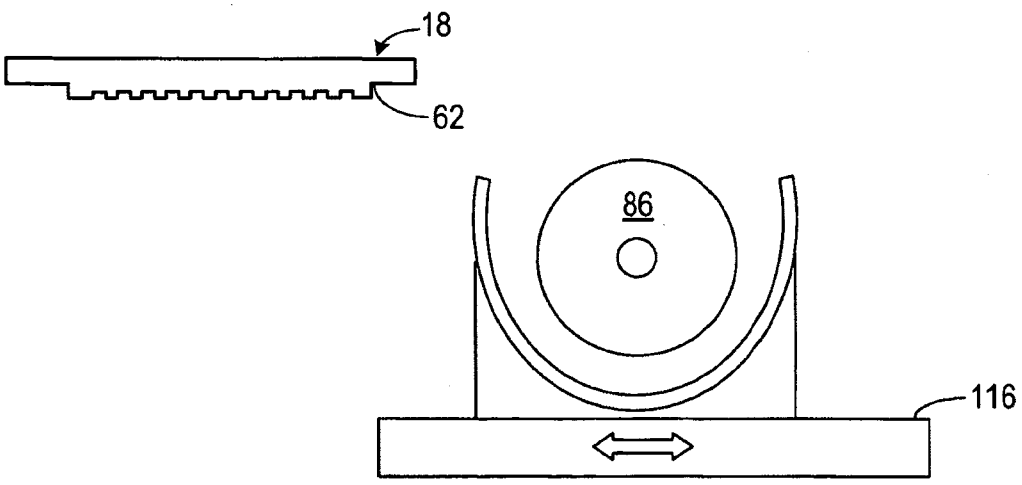

FIG. 12B

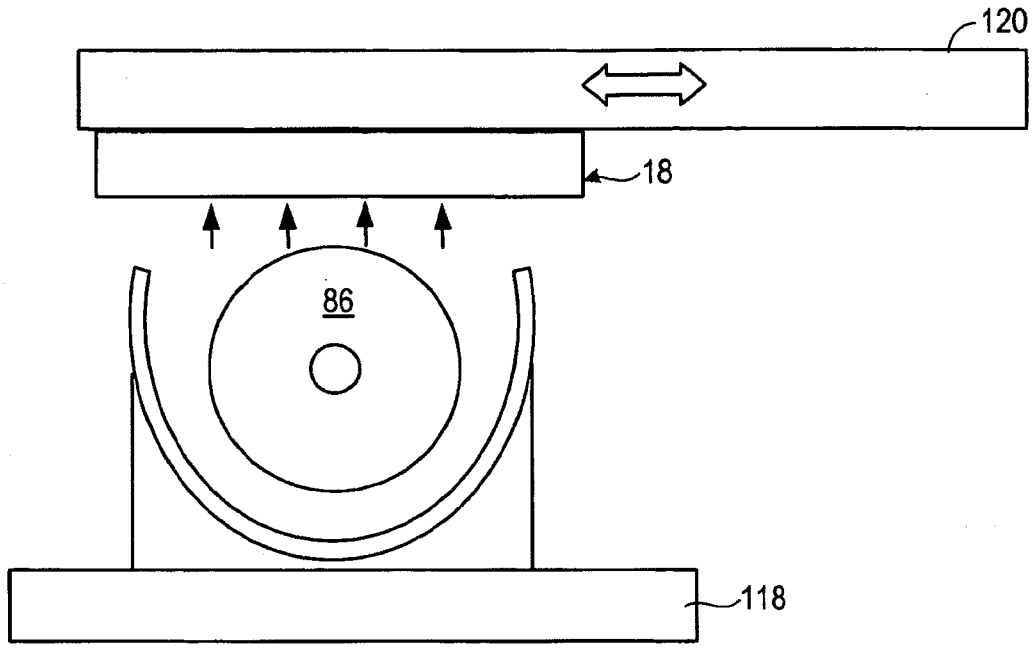

FIG. 13