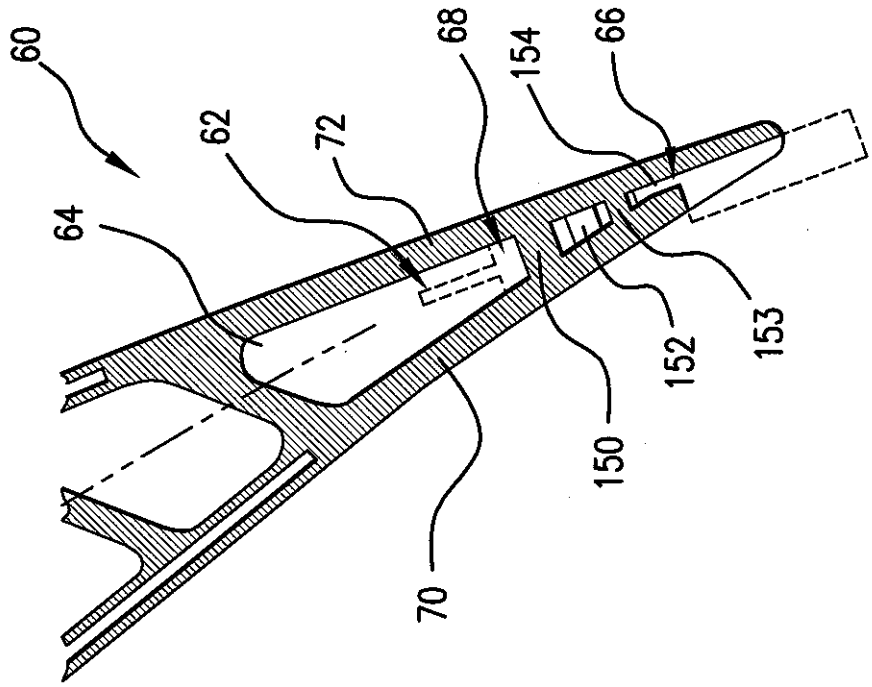

FIG.2

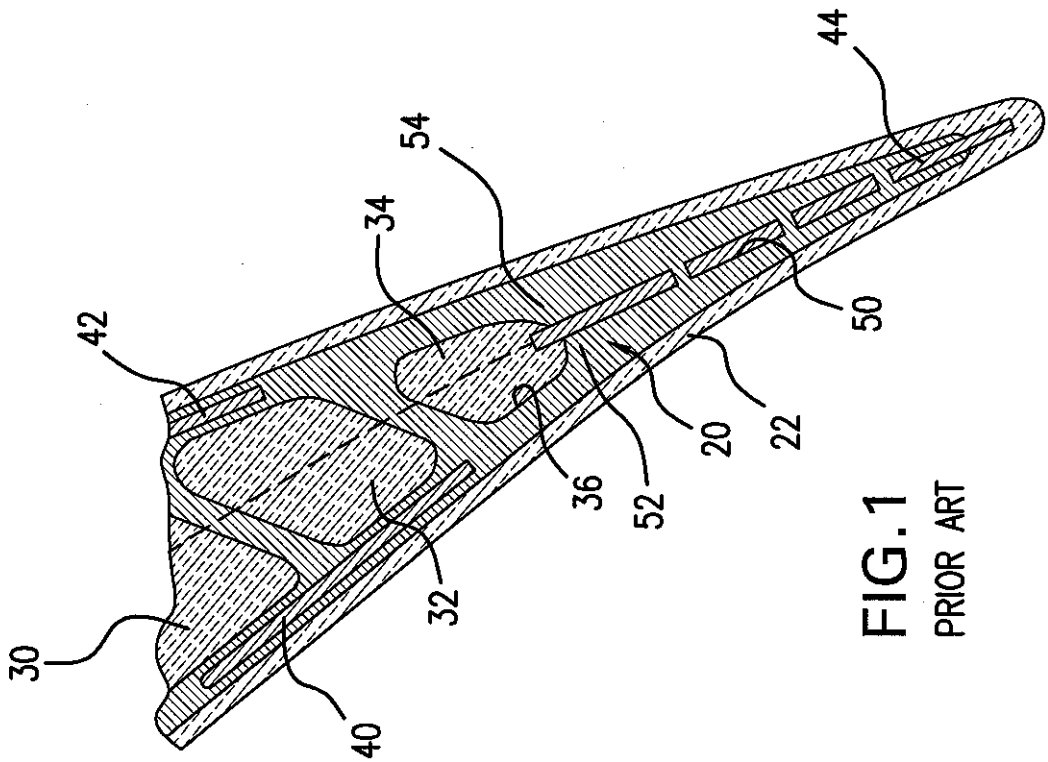

FIG.1
PRIOR ART

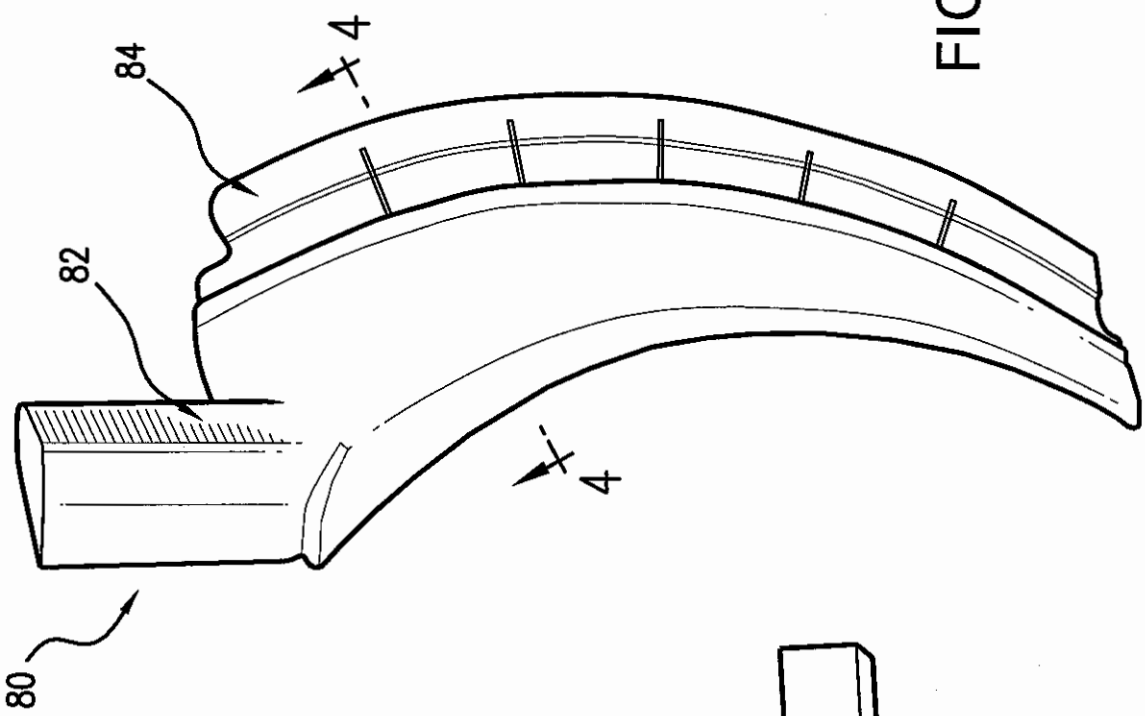

FIG.3

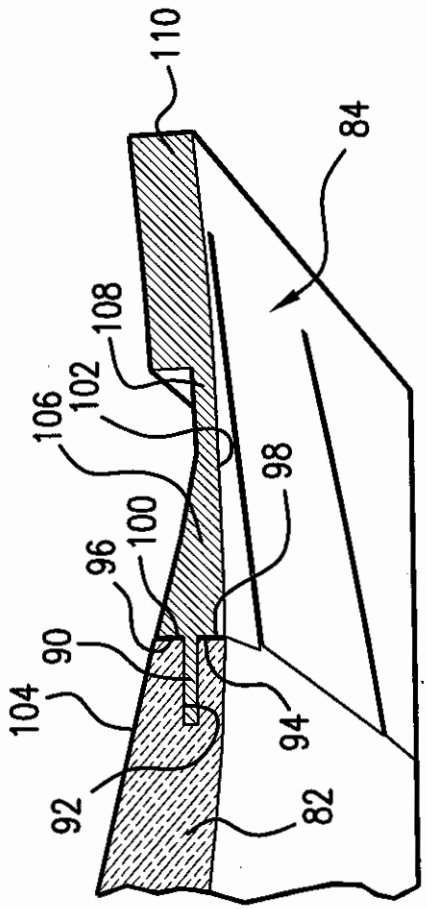

FIG.4



FIG.5

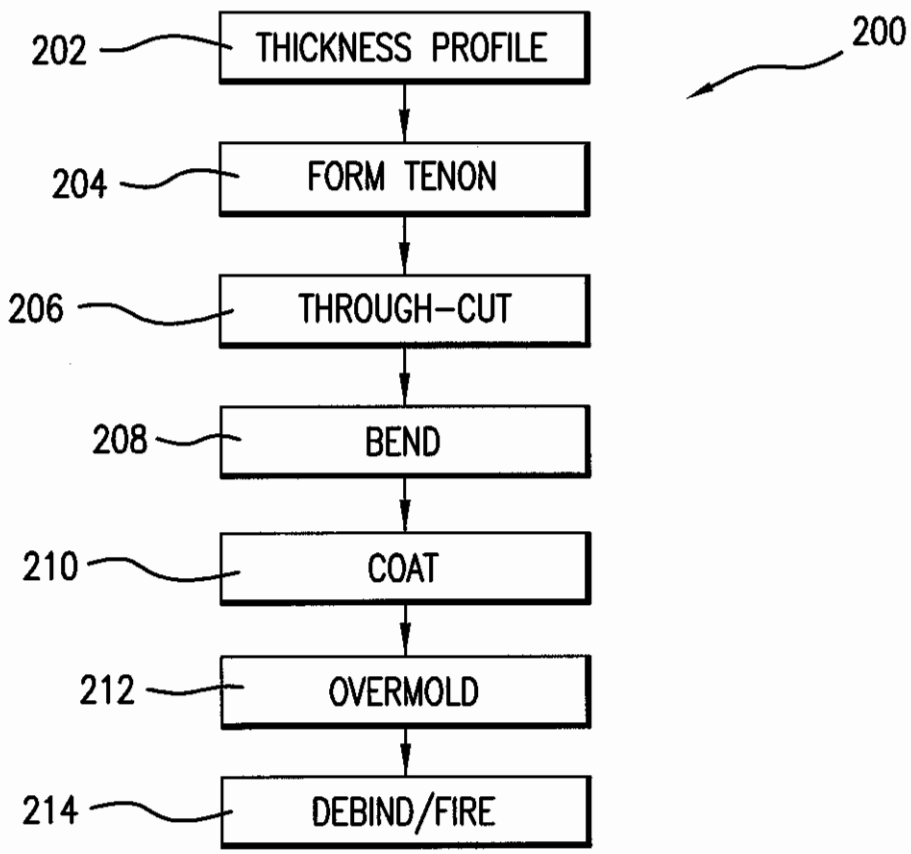
202
THICKNESS PROFILE
200
204
FORM TENON
206
THROUGH-CUT
208
BEND
210
COAT
212
OVERMOLD
214
DEBIND/FIRE

FIG.6

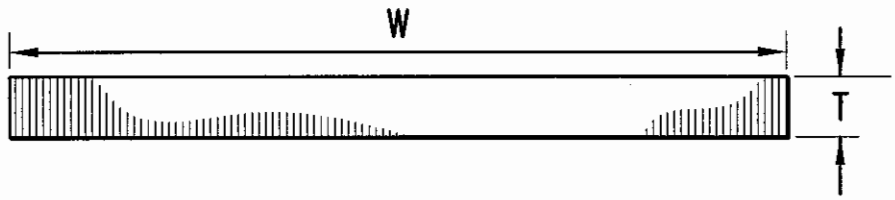

FIG.7

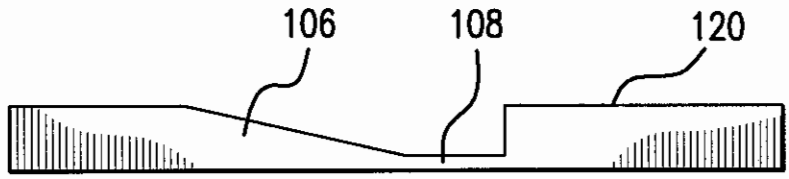

FIG.8

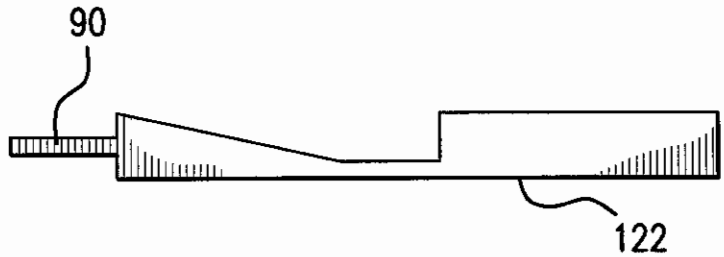

FIG.9

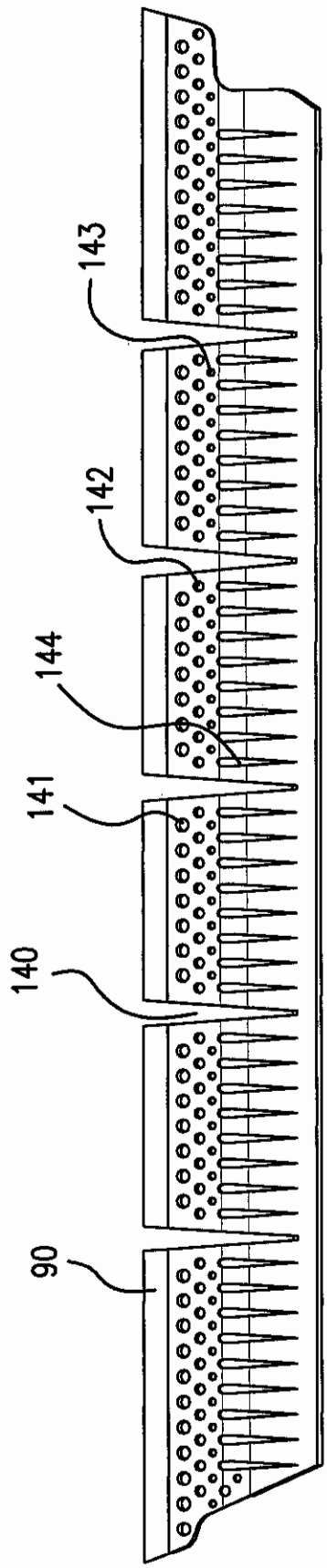

FIG.10

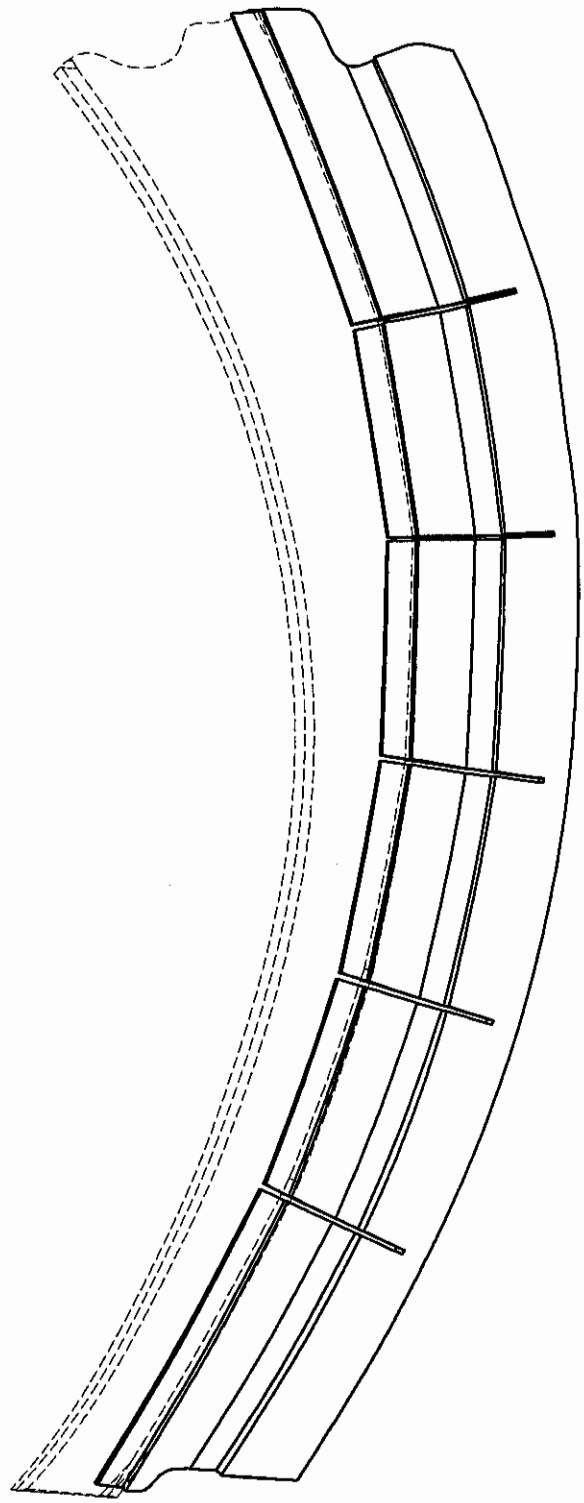

FIG.11

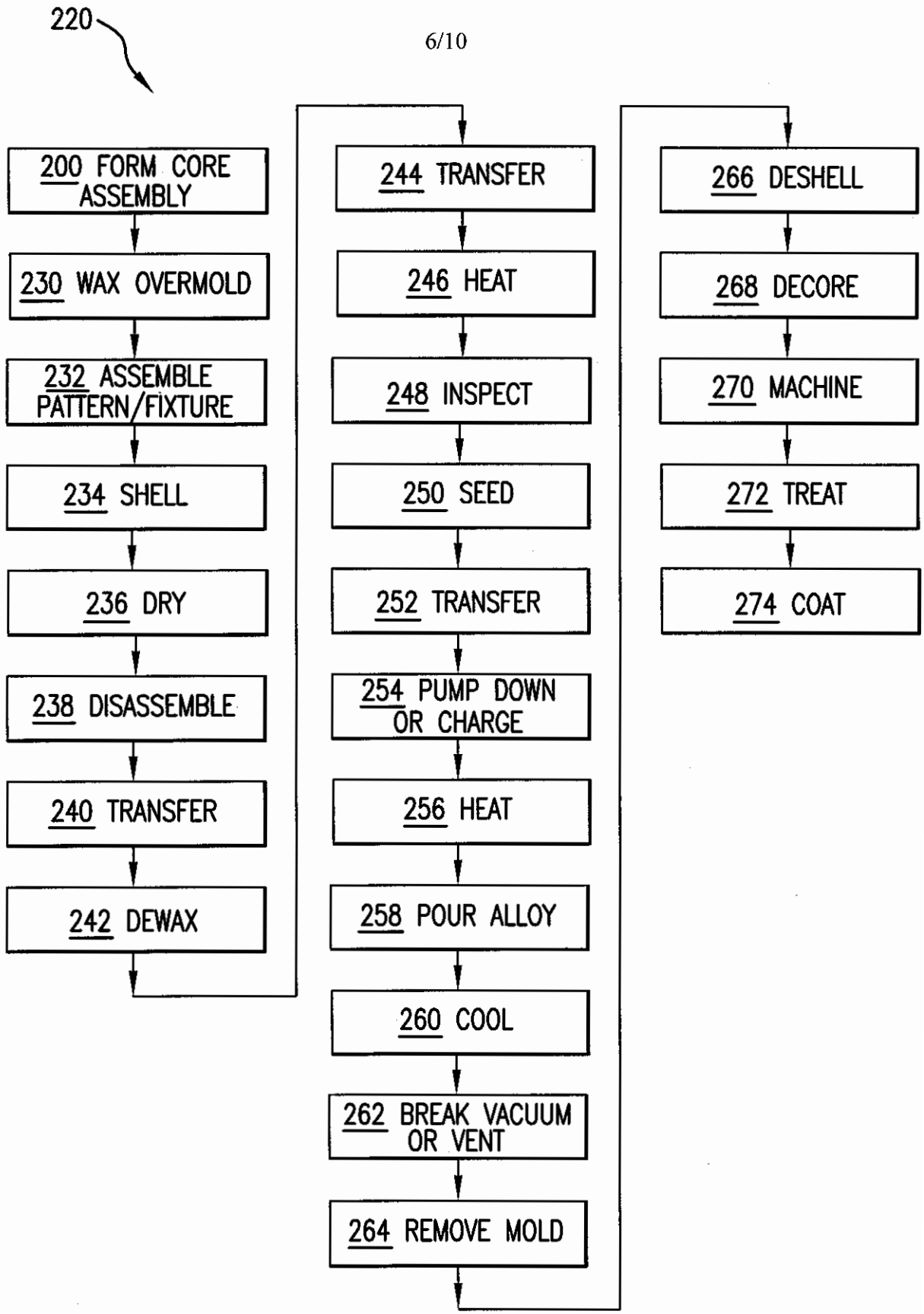
220
200 FORM CORE ASSEMBLY
230 WAX OVERMOLD
232 ASSEMBLE PATTERN/FIXTURE
234 SHELL
236 DRY
238 DISASSEMBLE
240 TRANSFER
242 DEWAX
244 TRANSFER
246 HEAT
248 INSPECT
250 SEED
252 TRANSFER
254 PUMP DOWN OR CHARGE
256 HEAT
258 POUR ALLOY
260 COOL
262 BREAK VACUUM OR VENT
264 REMOVE MOLD
266 DESHELL
268 DECORE
270 MACHINE
272 TREAT
274 COAT

FIG.12

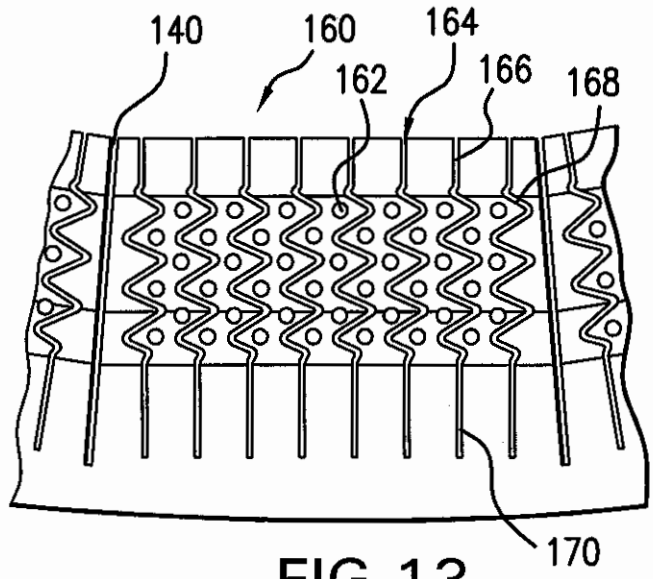

FIG.13

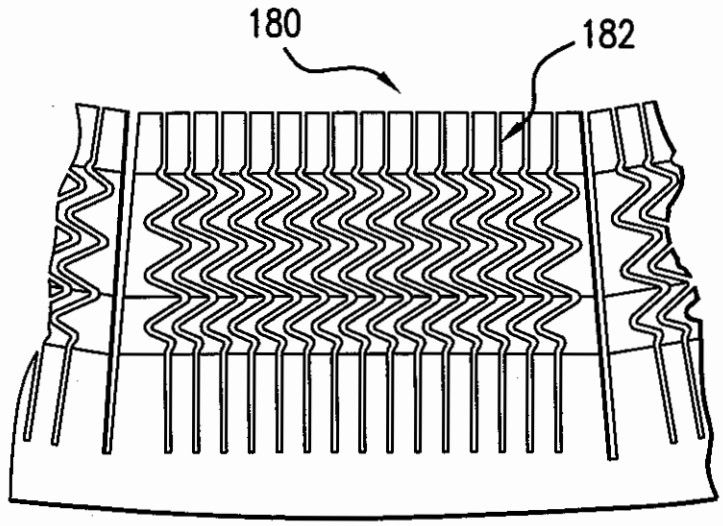

FIG.14

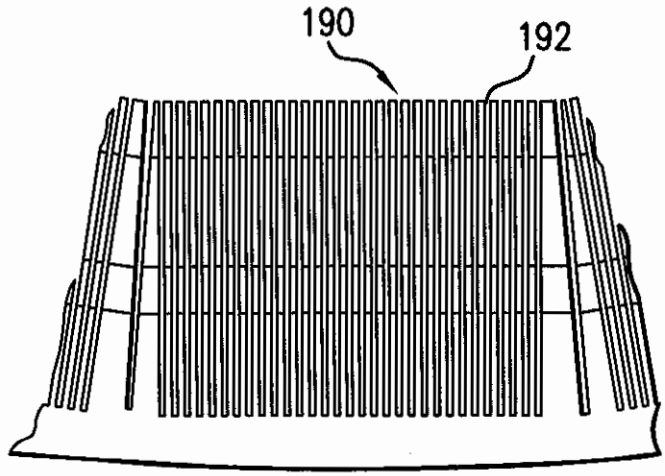

FIG.15

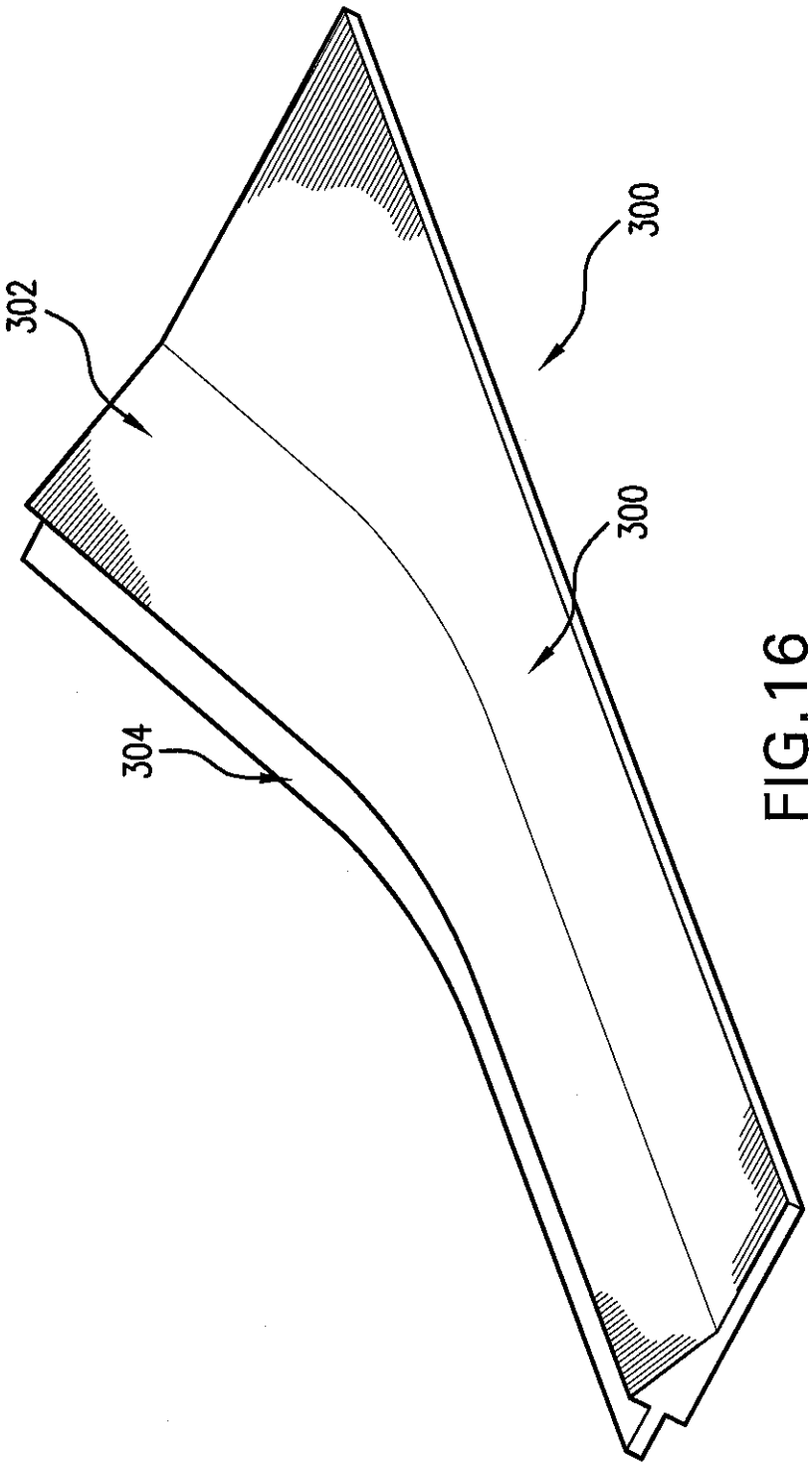

FIG.16

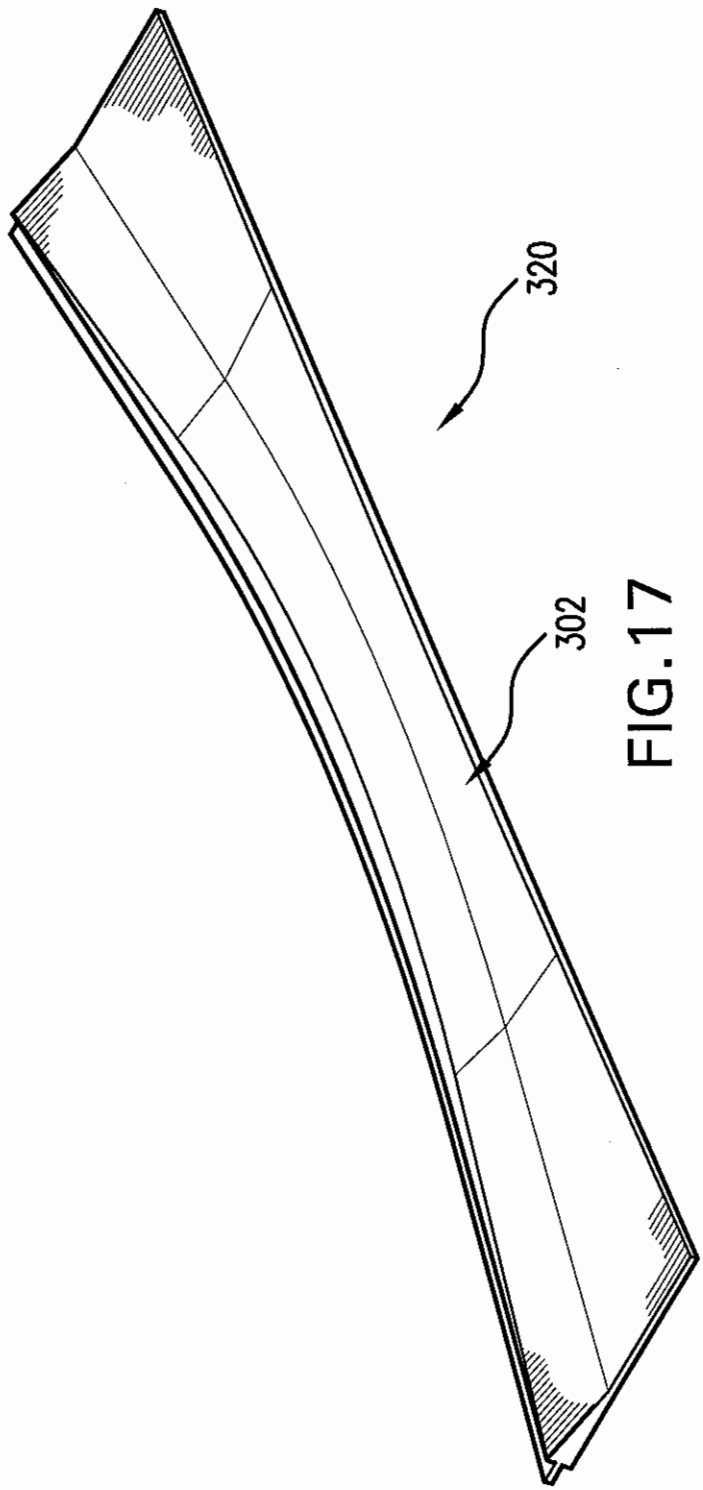

FIG. 17

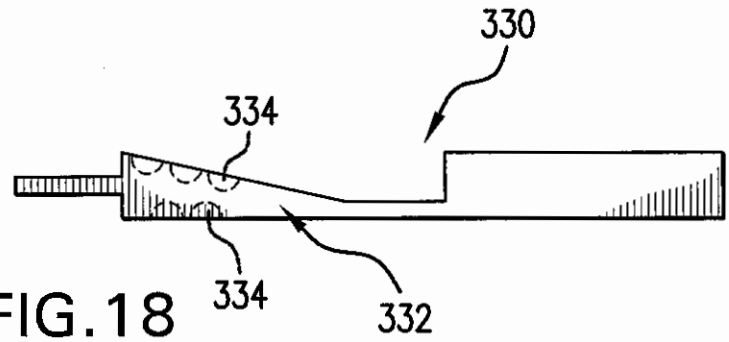

FIG.18

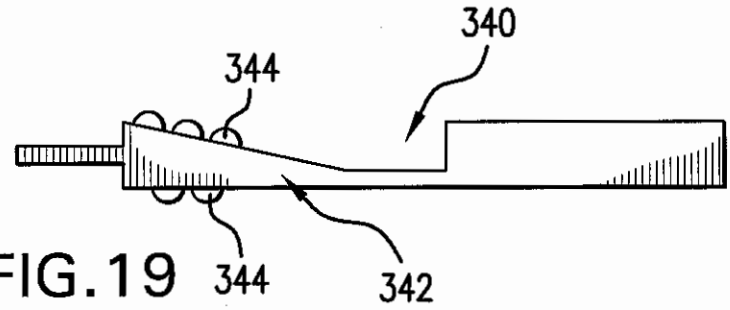

FIG.19

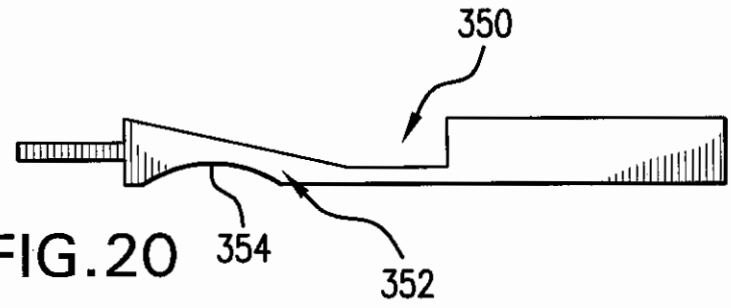

FIG.20

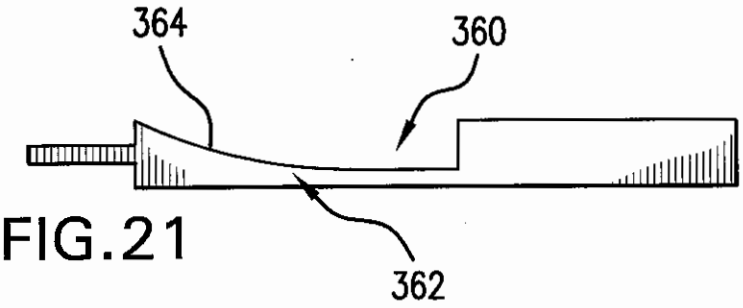

FIG.21

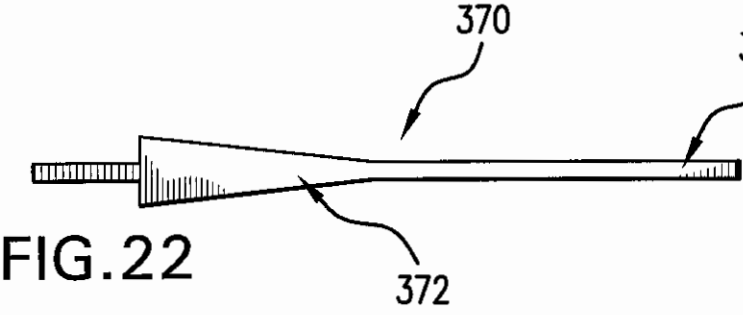

FIG.22