(12) INTERNATIONAL APPLICATION PUBLISHED UNDER THE PATENT COOPERATION TREATY (PCT)

(19) World Intellectual Property Organization
International Bureau

(43) International Publication Date
2 December 2004 (02.12.2004)

PCT

(10) International Publication Number
WO 2004/103666 A2

(51) International Patent Classification[7]: B29C

(21) International Application Number:
PCT/US2004/014720

(22) International Filing Date: 11 May 2004 (11.05.2004)

(25) Filing Language: English

(26) Publication Language: English

(30) Priority Data:

10/438,224	14 May 2003 (14.05.2003)	US
10/437,476	14 May 2003 (14.05.2003)	US

(71) Applicant: **MOLECULAR IMPRINTS, INC.** [US/US]; 1807-C West Braker Lane, Suite 100, Austin, TX 78758-3605 (US).

(72) Inventors: **MEISSL, Mario, J.**; 7401 N. Lamar Blvd. #201, Austin, TX 78752-2344 (US). **CHOI, Byung-Jin**; 1634 Jerusalem Drive, Round Rock, TX 78664-8620 (US). **BABBS, Daniel, A.**; 2008 Mistywood Drive, Austin, TX 78746-7808 (US). **BAILEY, Hillman, L.**; 300 Stirrup Drive, Dripping Springs, TX 78620-2722 (US).

(74) Agent: **BROOKS, Kenneth, C.**; Molecular Imprints, Inc., Legal Department, P.O. Box 81536, Austin, TX 78708-1536 (US).

(81) Designated States *(unless otherwise indicated, for every kind of national protection available)*: AE, AG, AL, AM, AT, AU, AZ, BA, BB, BG, BR, BW, BY, BZ, CA, CH, CN, CO, CR, CU, CZ, DE, DK, DM, DZ, EC, EE, EG, ES, FI, GB, GD, GE, GH, GM, HR, HU, ID, IL, IN, IS, JP, KE, KG, KP, KR, KZ, LC, LK, LR, LS, LT, LU, LV, MA, MD, MG, MK, MN, MW, MX, MZ, NA, NI, NO, NZ, OM, PG, PH, PL, PT, RO, RU, SC, SD, SE, SG, SK, SL, SY, TJ, TM, TN, TR, TT, TZ, UA, UG, US, UZ, VC, VN, YU, ZA, ZM, ZW.

(84) Designated States *(unless otherwise indicated, for every kind of regional protection available)*: ARIPO (BW, GH, GM, KE, LS, MW, MZ, NA, SD, SL, SZ, TZ, UG, ZM, ZW), Eurasian (AM, AZ, BY, KG, KZ, MD, RU, TJ, TM), European (AT, BE, BG, CH, CY, CZ, DE, DK, EE, ES, FI, FR, GB, GR, HU, IE, IT, LU, MC, NL, PL, PT, RO, SE, SI,

[Continued on next page]

(54) Title: METHOD, SYSTEM, HOLDER AND ASSEMBLY FOR TRANSFERRING TEMPLATES DURING IMPRINT LITHOGRAPHY PROCESSES

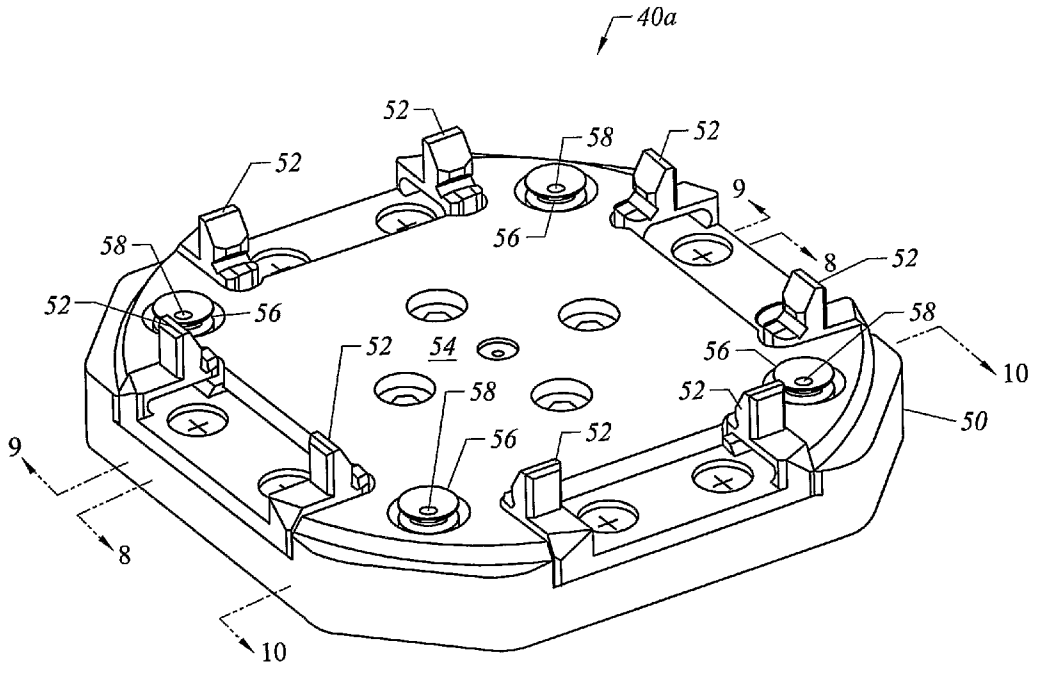

(57) Abstract: Disclosed are a method, system, holder and assembly for transferring templates during imprint lithography processes.

WO 2004/103666 A2

SK, TR), OAPI (BF, BJ, CF, CG, CI, CM, GA, GN, GQ, GW, ML, MR, NE, SN, TD, TG).

Published:

— *without international search report and to be republished upon receipt of that report*

For two-letter codes and other abbreviations, refer to the "Guidance Notes on Codes and Abbreviations" appearing at the beginning of each regular issue of the PCT Gazette.