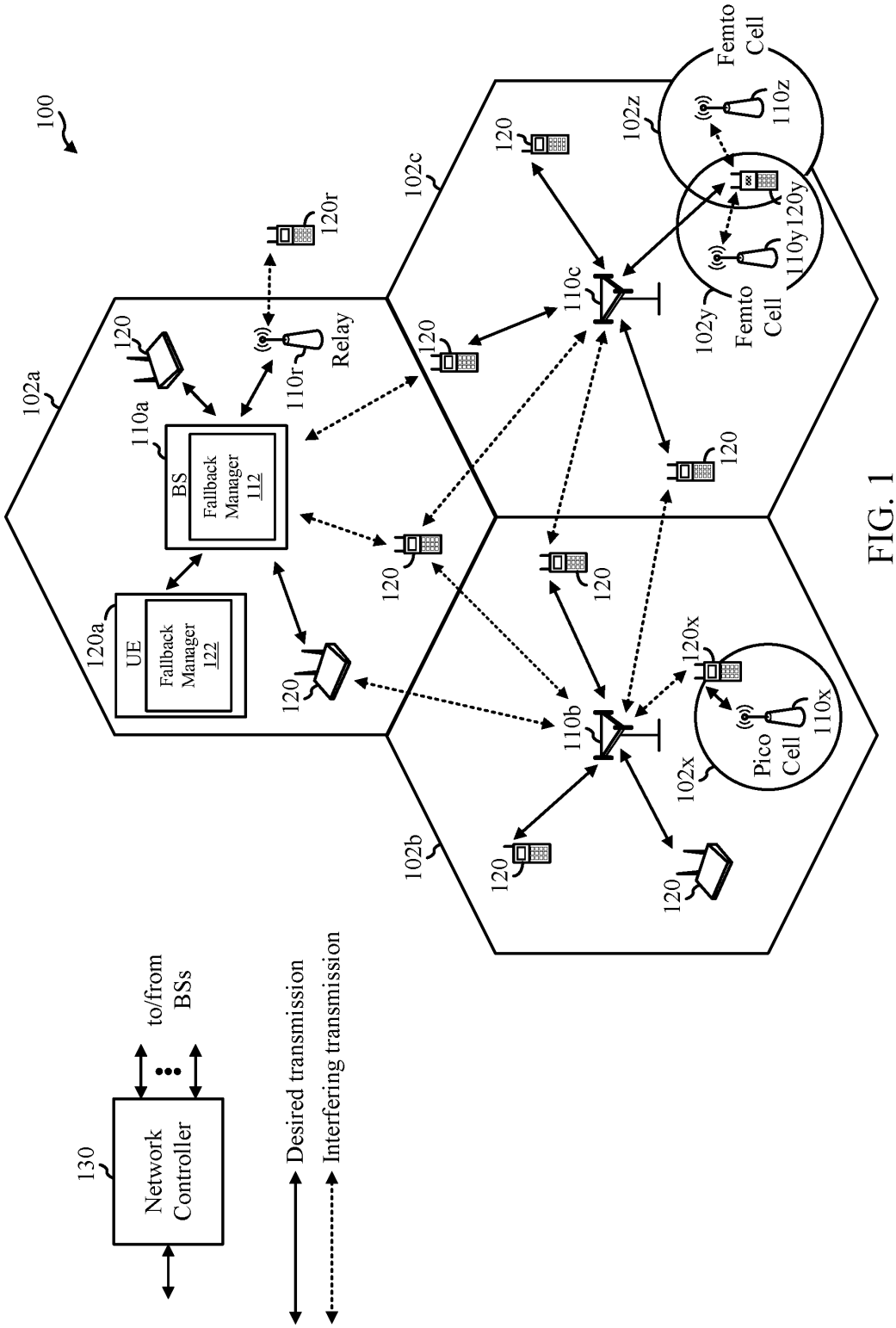
100
102a
102b
102c
102x
102y
102z
110a
110b
110c
110r
110x
110y
110z
120
120a
120r
120x
120y
130
BS
Fallback Manager 112
UE
Fallback Manager 122
Relay
Pico Cell
Femto Cell
Femto Cell
Network Controller
to/from BSs
Desired transmission
Interfering transmission

FIG. 1

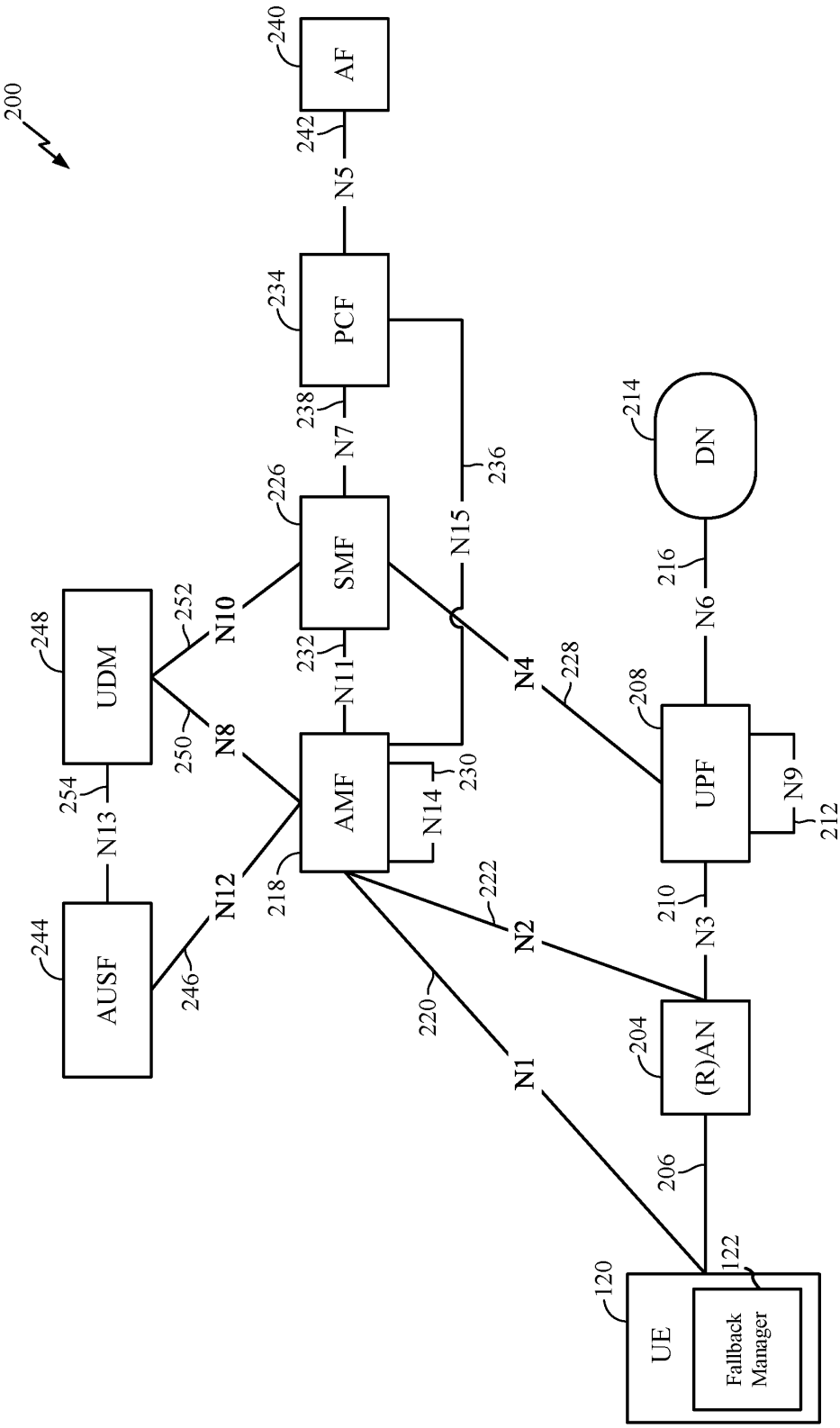
200
AF
240
242
N5
PCF
234
238
N7
SMF
226
232
N11
AMF
218
UDM
248
252
N10
250
N8
254
N13
AUSF
244
246
N12
N15
236
N4
228
N14
230
222
N2
220
N1
DN
214
216
N6
UPF
208
N9
212
210
N3
(R)AN
204
206
UE
120
Fallback Manager
122

FIG. 2A

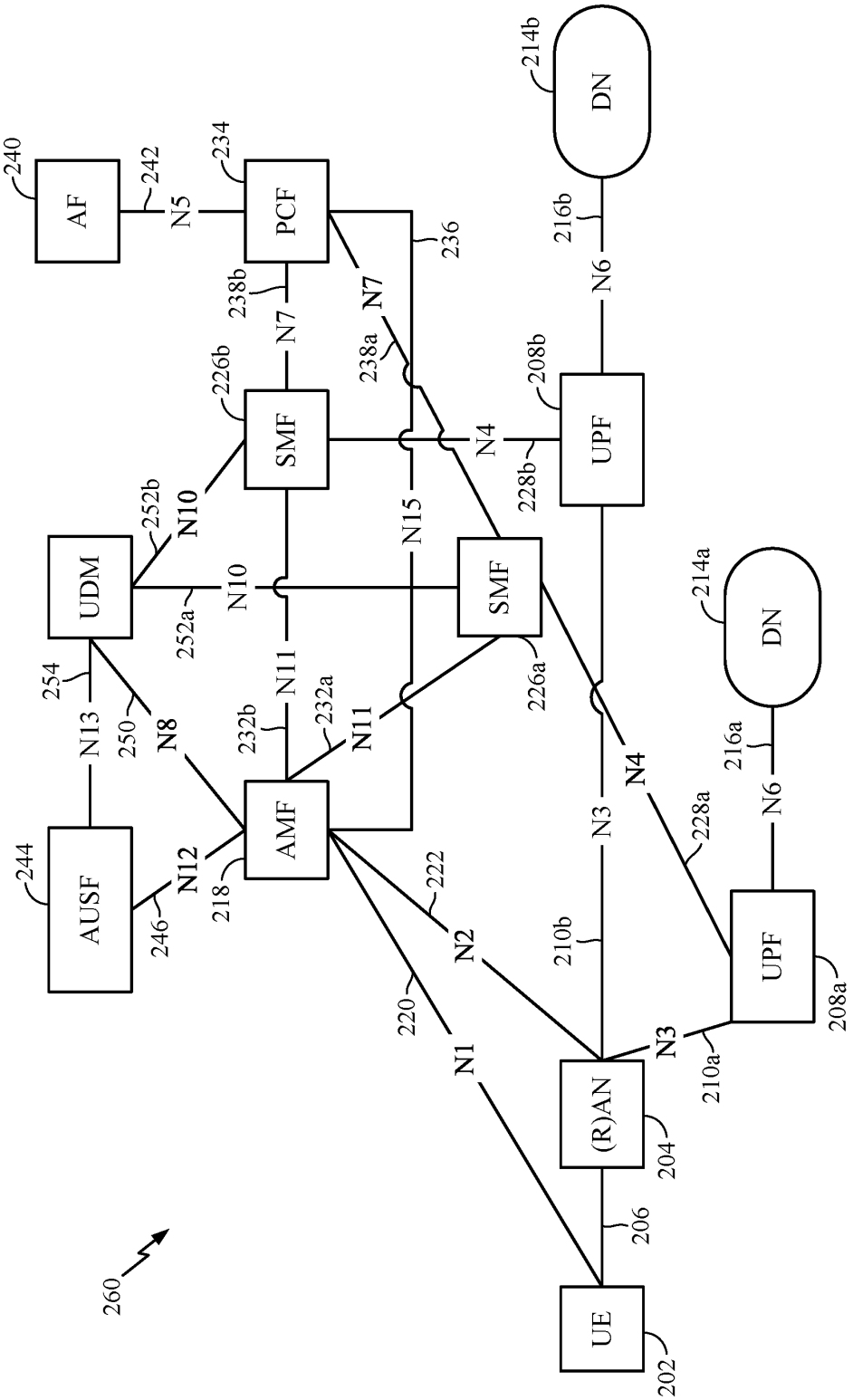
AF
240
242
N5
PCF
234
236
238b
N7
N7
238a
DN
214b
216b
N6
SMF
226b
N4
UPF
208b
228b
N10
252b
UDM
N10
252a
N15
SMF
226a
N11
232b
232a
N11
254
N13
250
N8
AMF
218
N12
AUSF
244
246
222
N2
220
N1
N3
210b
N4
228a
DN
214a
216a
N6
UPF
208a
N3
210a
(R)AN
204
206
UE
202
260

FIG. 2B

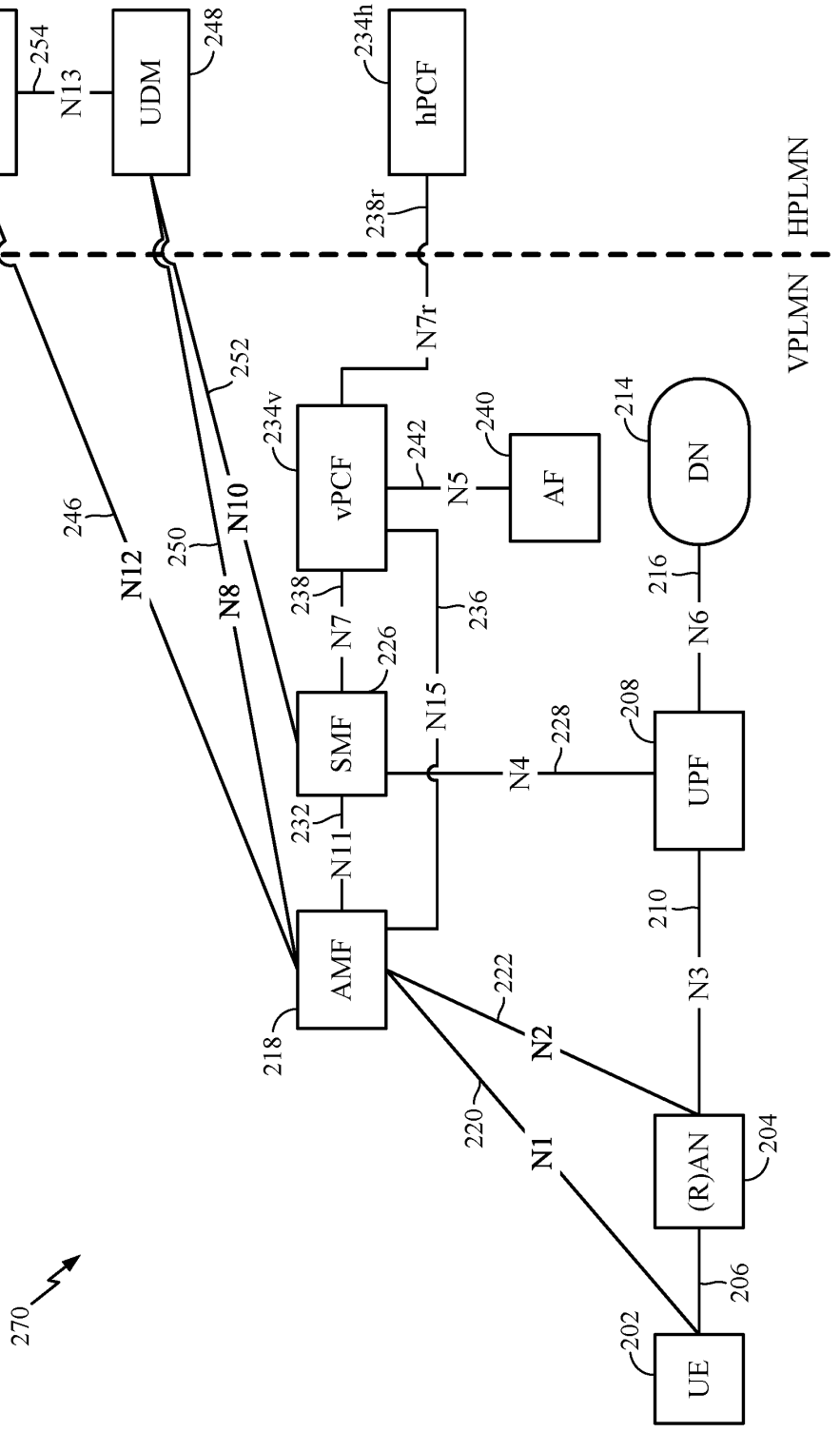
AUSF
244
254
N13
UDM
248
234h
hPCF
238r
HPLMN
VPLMN
N7r
252
234v
vPCF
242
N5
240
AF
214
DN
246
N12
250
N8
N10
238
N7
236
216
N6
SMF
226
N15
208
UPF
N4
228
232
N11
210
N3
AMF
222
N2
218
220
N1
(R)AN
204
206
UE
202
270

FIG. 2C

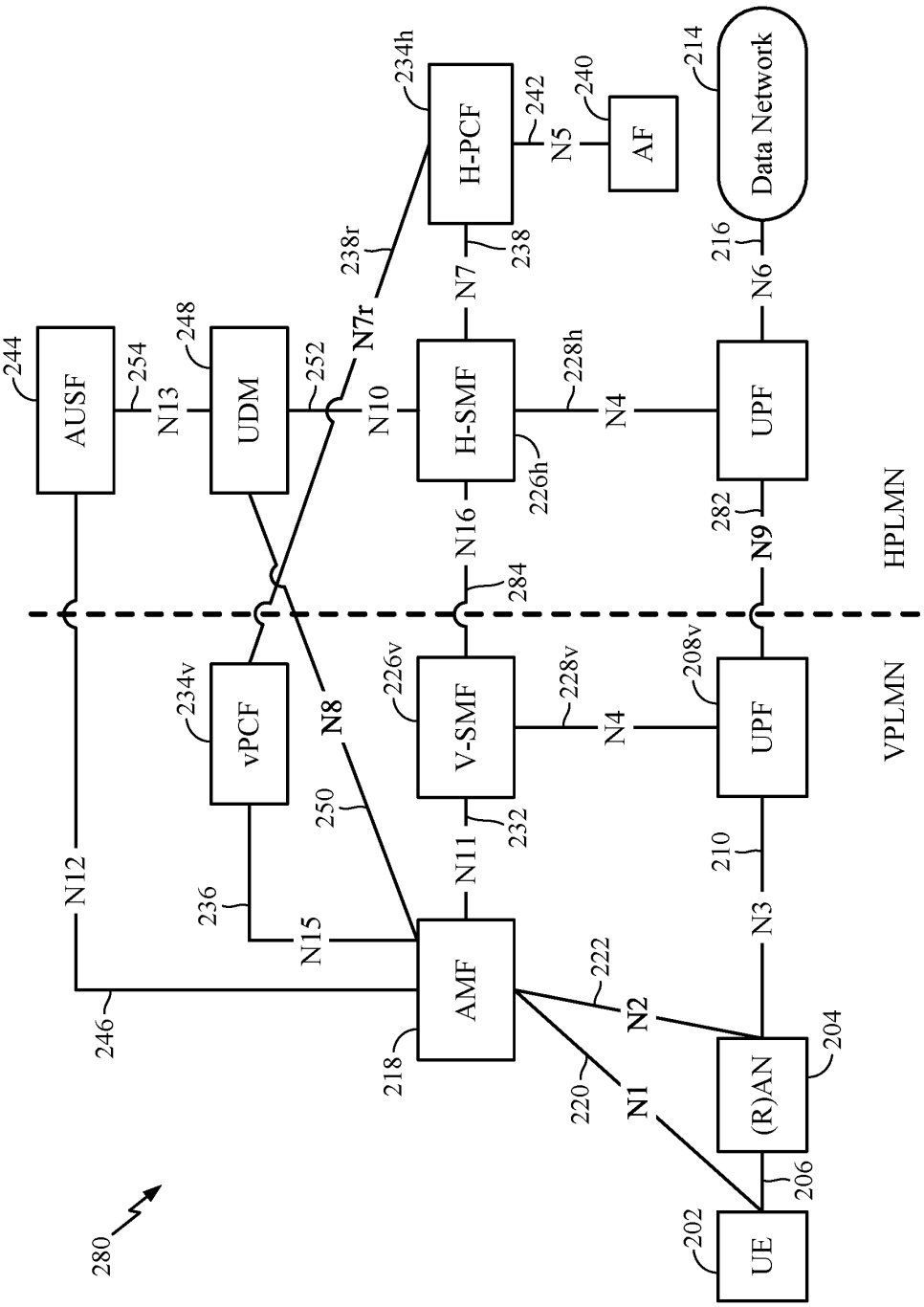

280
UE
202
206
(R)AN
204
N1
220
N2
222
AMF
218
N3
210
N12
246
N15
236
vPCF
234v
N8
250
N11
232
V-SMF
226v
228v
N4
UPF
208v
VPLMN
284
N16
N9
282
HPLMN
AUSF
244
254
N13
UDM
248
252
N10
N7r
238r
H-SMF
226h
228h
N4
UPF
N6
216
N7
238
H-PCF
234h
242
N5
AF
240
Data Network
214

FIG. 2D

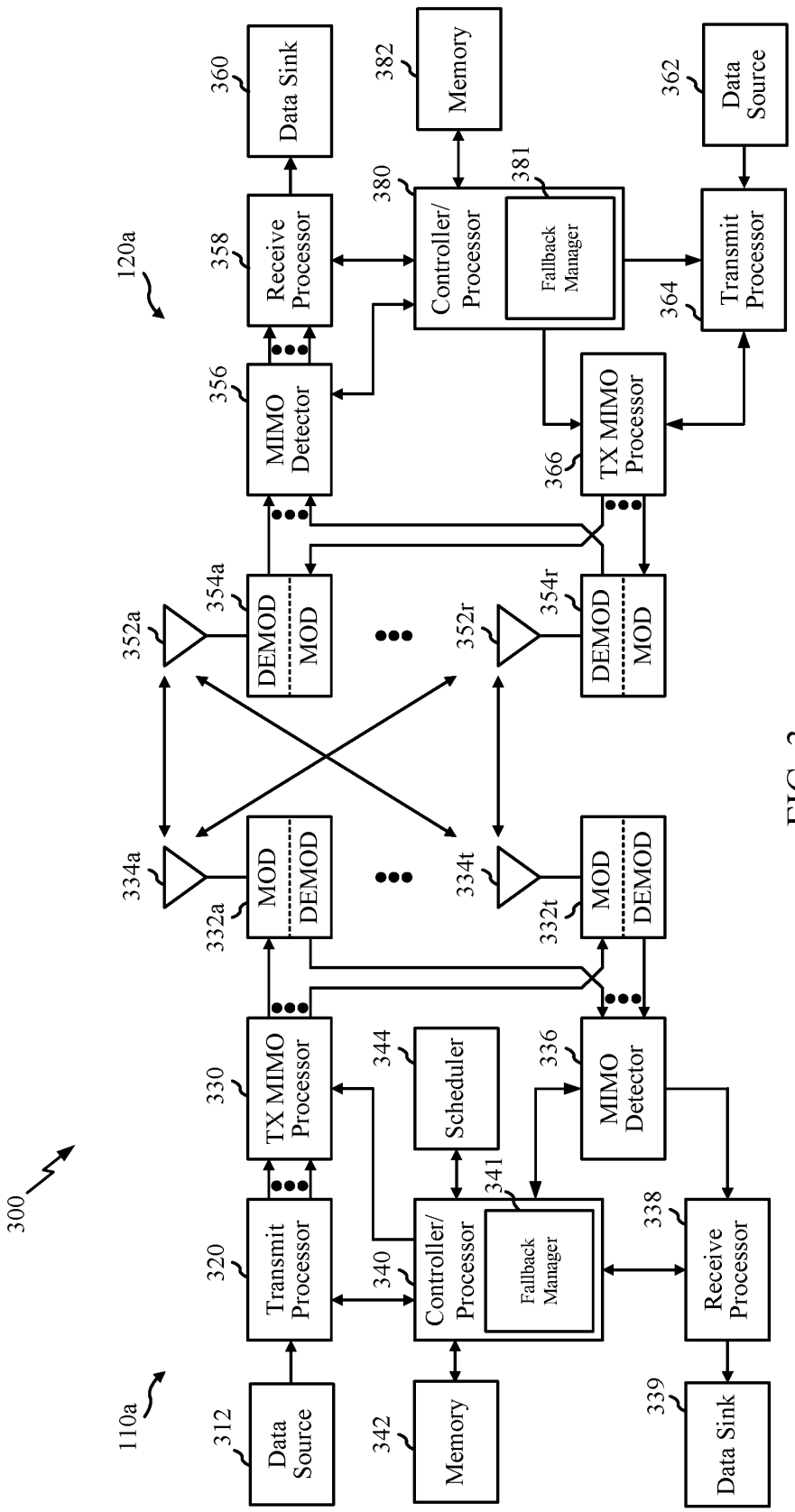
300
110a
120a
Data Source
312
Transmit Processor
320
TX MIMO Processor
330
MOD
DEMOD
332a
332t
334a
334t
MIMO Detector
336
Scheduler
344
Controller/ Processor
340
Fallback Manager
341
Memory
342
Receive Processor
338
Data Sink
339
DEMOD
MOD
354a
354r
352a
352r
MIMO Detector
356
Receive Processor
358
Data Sink
360
TX MIMO Processor
366
Transmit Processor
364
Data Source
362
Controller/ Processor
380
Fallback Manager
381
Memory
382

FIG. 3

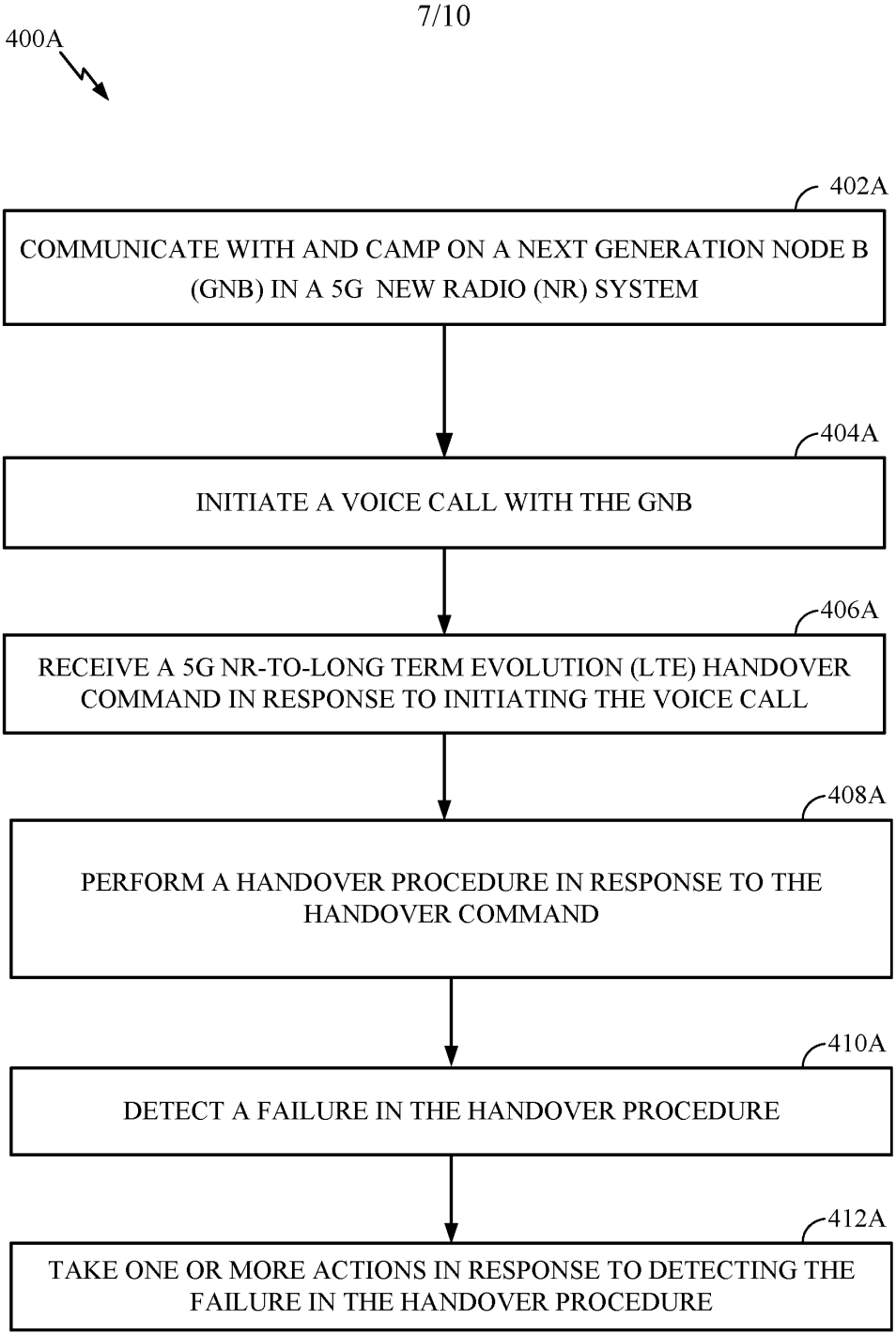
400A
402A
COMMUNICATE WITH AND CAMP ON A NEXT GENERATION NODE B (GNB) IN A 5G NEW RADIO (NR) SYSTEM
404A
INITIATE A VOICE CALL WITH THE GNB
406A
RECEIVE A 5G NR-TO-LONG TERM EVOLUTION (LTE) HANDOVER COMMAND IN RESPONSE TO INITIATING THE VOICE CALL
408A
PERFORM A HANDOVER PROCEDURE IN RESPONSE TO THE HANDOVER COMMAND
410A
DETECT A FAILURE IN THE HANDOVER PROCEDURE
412A
TAKE ONE OR MORE ACTIONS IN RESPONSE TO DETECTING THE FAILURE IN THE HANDOVER PROCEDURE

FIG. 4A

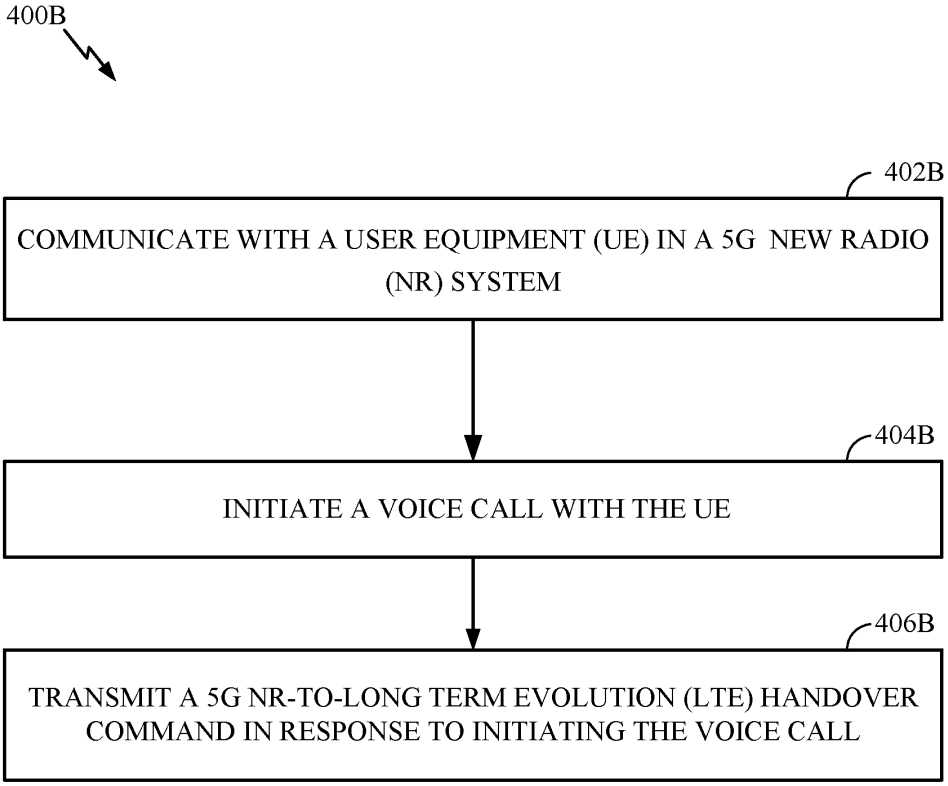
400B
402B
COMMUNICATE WITH A USER EQUIPMENT (UE) IN A 5G NEW RADIO (NR) SYSTEM
404B
INITIATE A VOICE CALL WITH THE UE
406B
TRANSMIT A 5G NR-TO-LONG TERM EVOLUTION (LTE) HANDOVER COMMAND IN RESPONSE TO INITIATING THE VOICE CALL

FIG. 4B

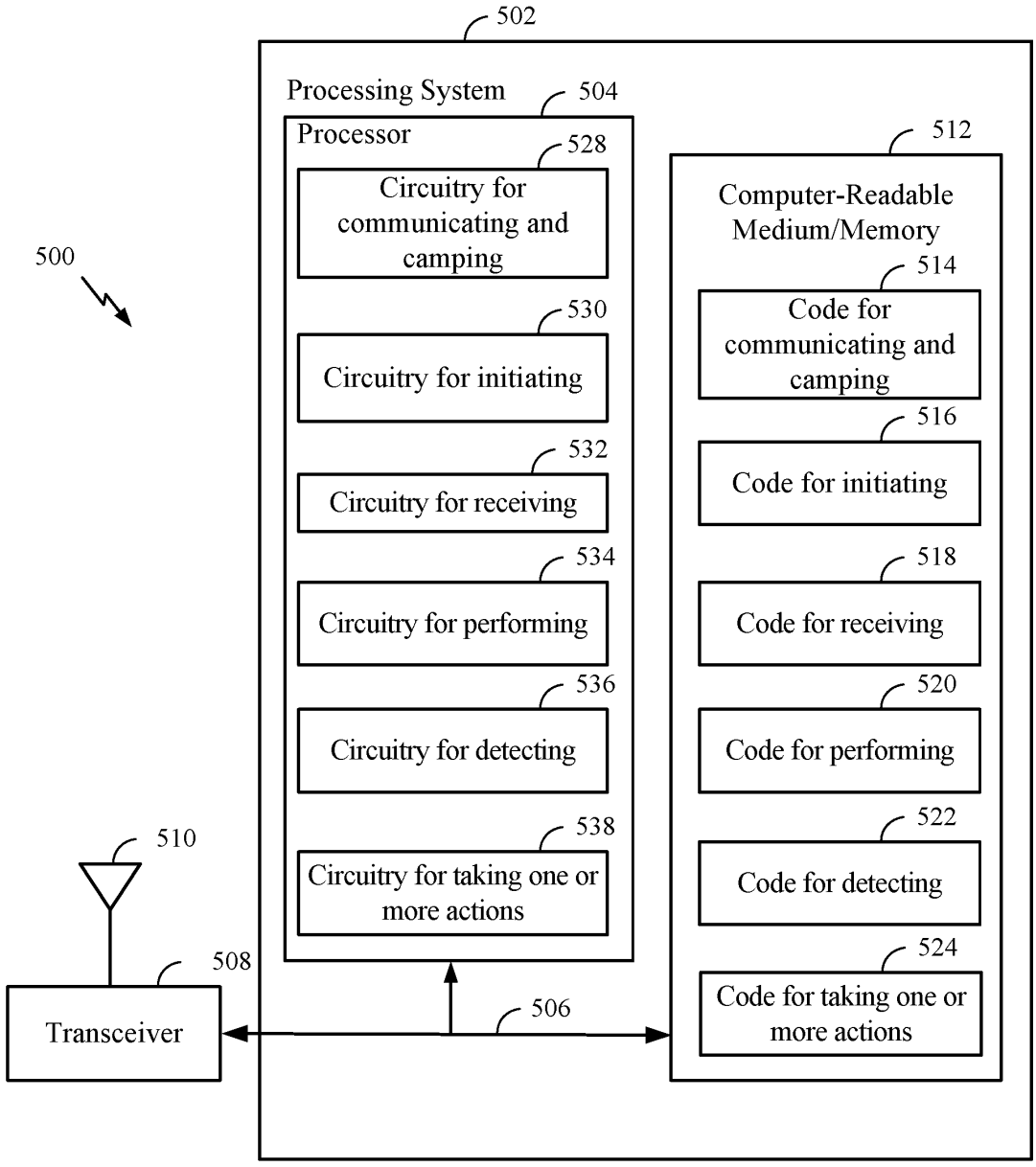
502
Processing System
504
Processor
528
Circuitry for communicating and camping
530
Circuitry for initiating
532
Circuitry for receiving
534
Circuitry for performing
536
Circuitry for detecting
538
Circuitry for taking one or more actions
500
510
508
Transceiver
506
512
Computer-Readable Medium/Memory
514
Code for communicating and camping
516
Code for initiating
518
Code for receiving
520
Code for performing
522
Code for detecting
524
Code for taking one or more actions

FIG. 5

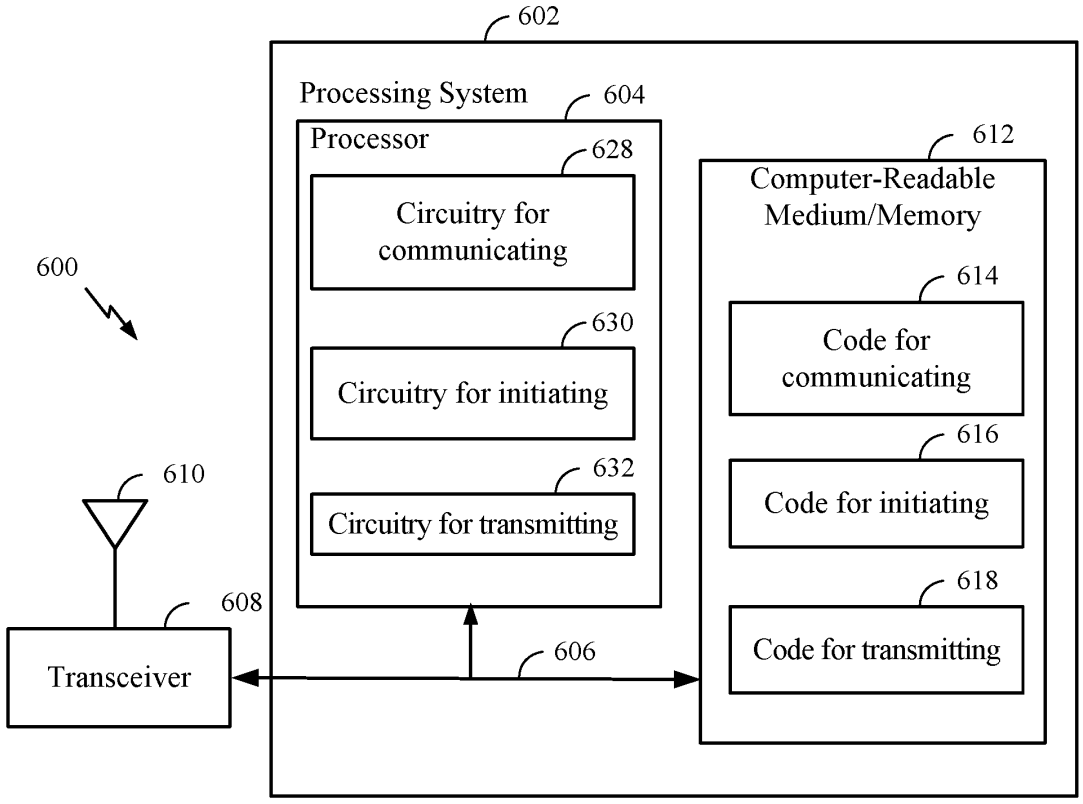
602
Processing System
604
Processor
628
Circuitry for communicating
630
Circuitry for initiating
632
Circuitry for transmitting
612
Computer-Readable Medium/Memory
614
Code for communicating
616
Code for initiating
618
Code for transmitting
600
610
608
Transceiver
606

FIG. 6