FIG. 1

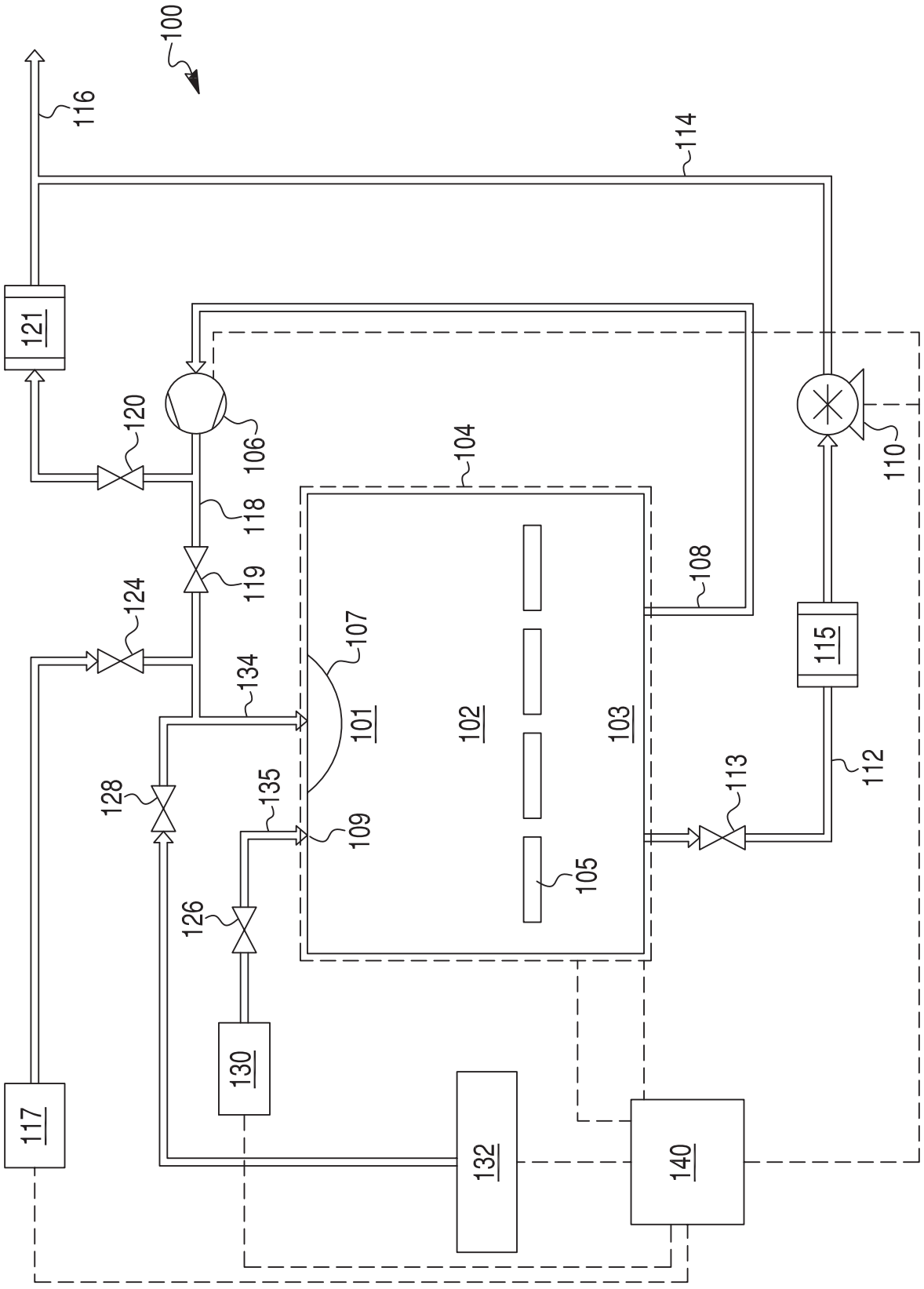
100
116
114
121
120
106
104
118
119
124
107
134
101
102
103
108
110
115
112
113
128
135
109
105
126
130
117
132
140

FIG. 2

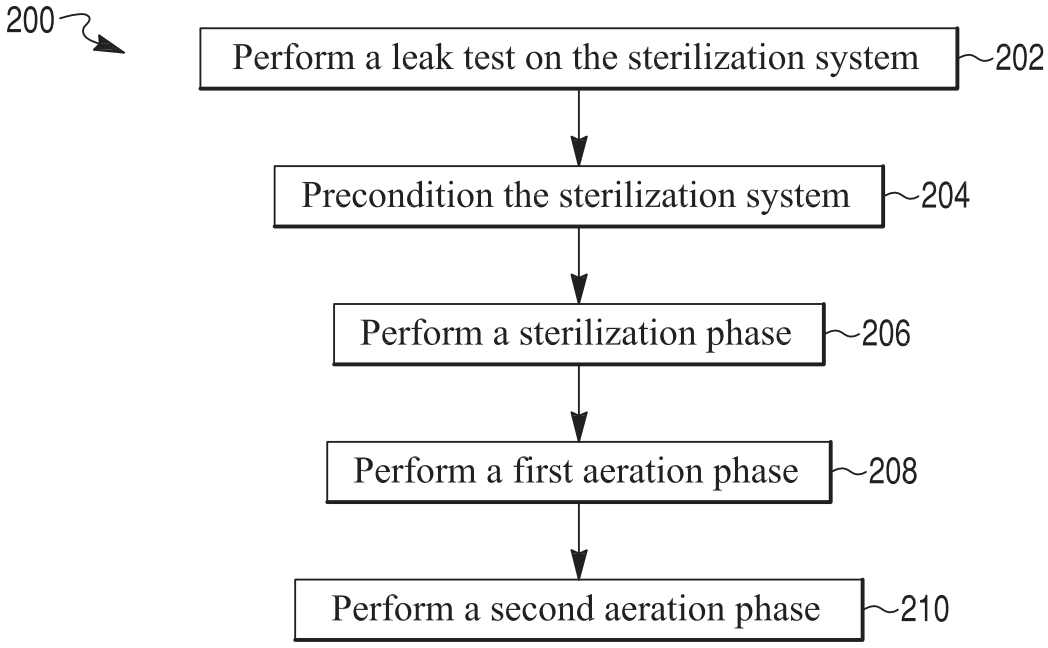
200
Perform a leak test on the sterilization system
202
Precondition the sterilization system
204
Perform a sterilization phase
206
Perform a first aeration phase
208
Perform a second aeration phase
210

FIG. 3A

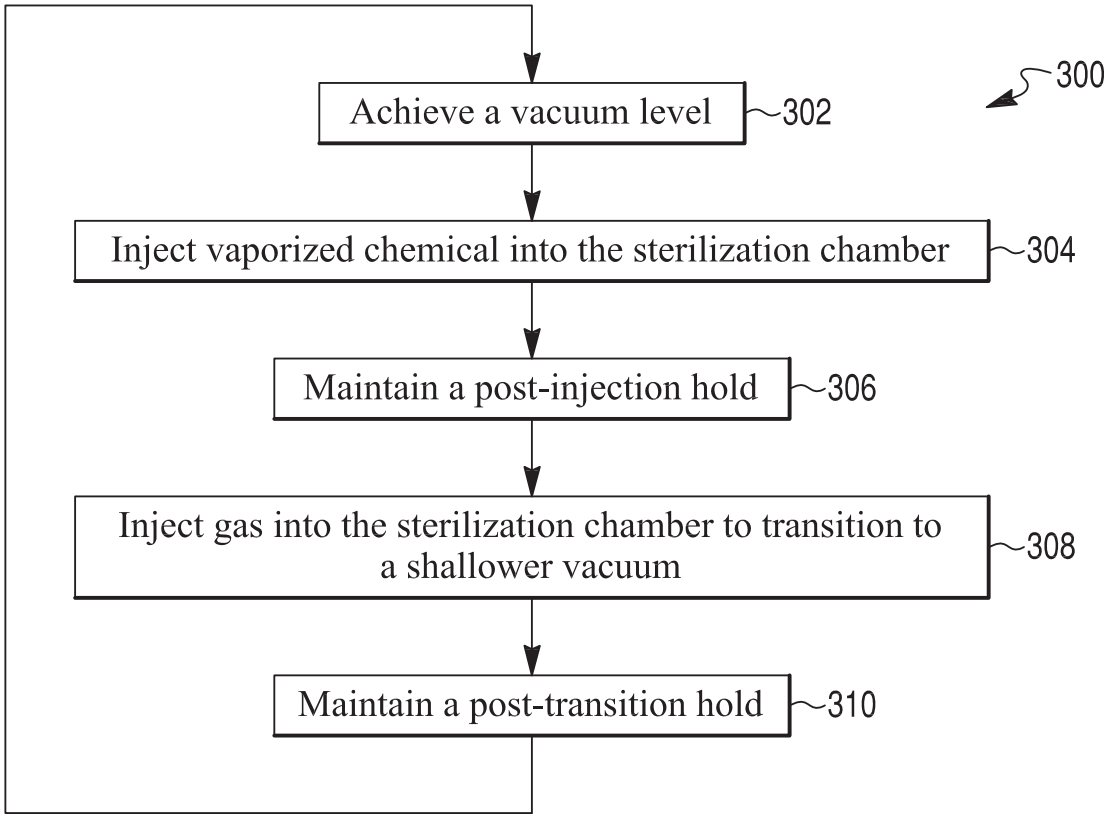
300
Achieve a vacuum level
302
Inject vaporized chemical into the sterilization chamber
304
Maintain a post-injection hold
306
Inject gas into the sterilization chamber to transition to a shallower vacuum
308
Maintain a post-transition hold
310

FIG. 3B

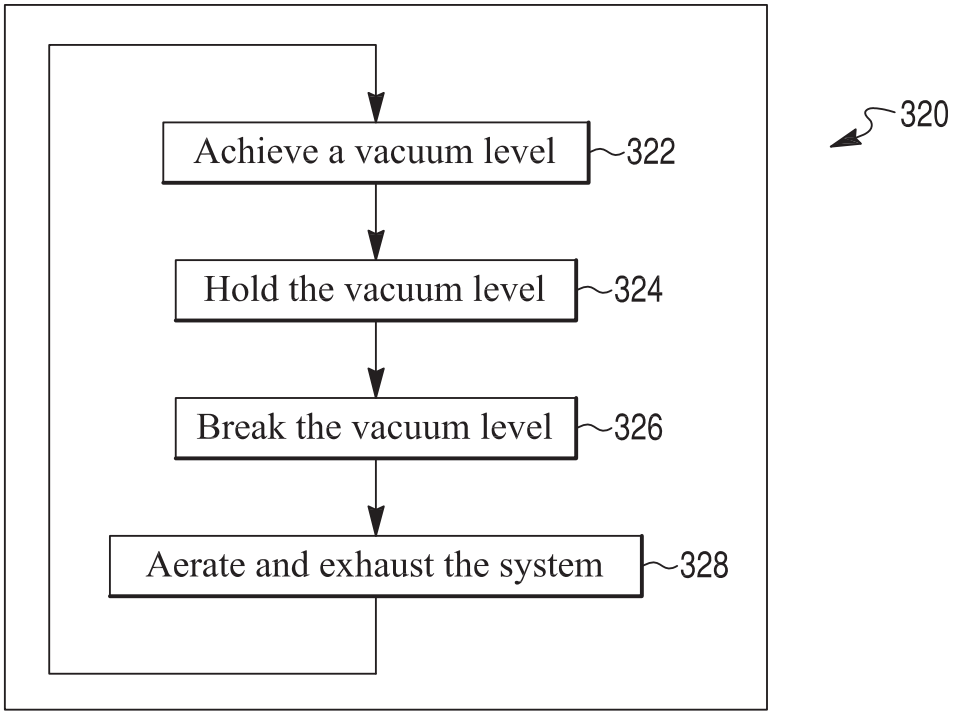
320
Achieve a vacuum level
322
Hold the vacuum level
324
Break the vacuum level
326
Aerate and exhaust the system
328

FIG. 3C

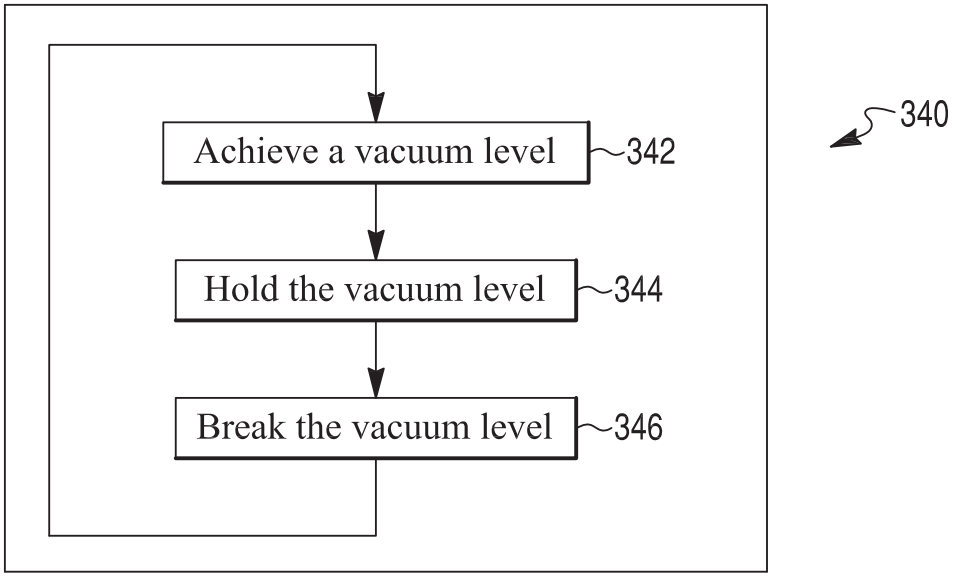
340
Achieve a vacuum level
342
Hold the vacuum level
344
Break the vacuum level
346

FIG. 4A

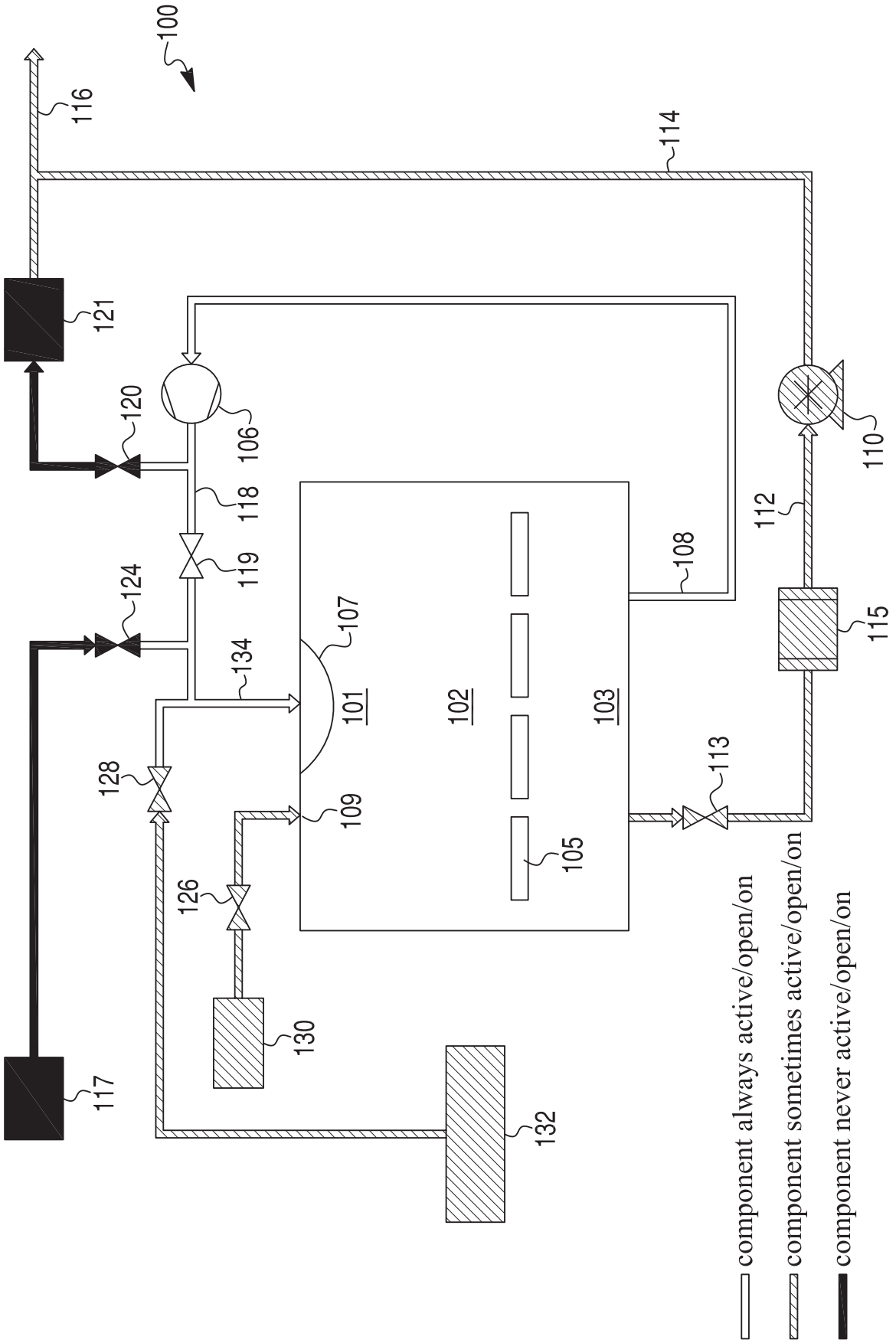
100
116
114
121
120
106
118
119
124
134
107
101
102
103
108
112
110
115
128
109
113
126
105
130
132
117
component always active/open/on
component sometimes active/open/on
component never active/open/on

FIG. 4B

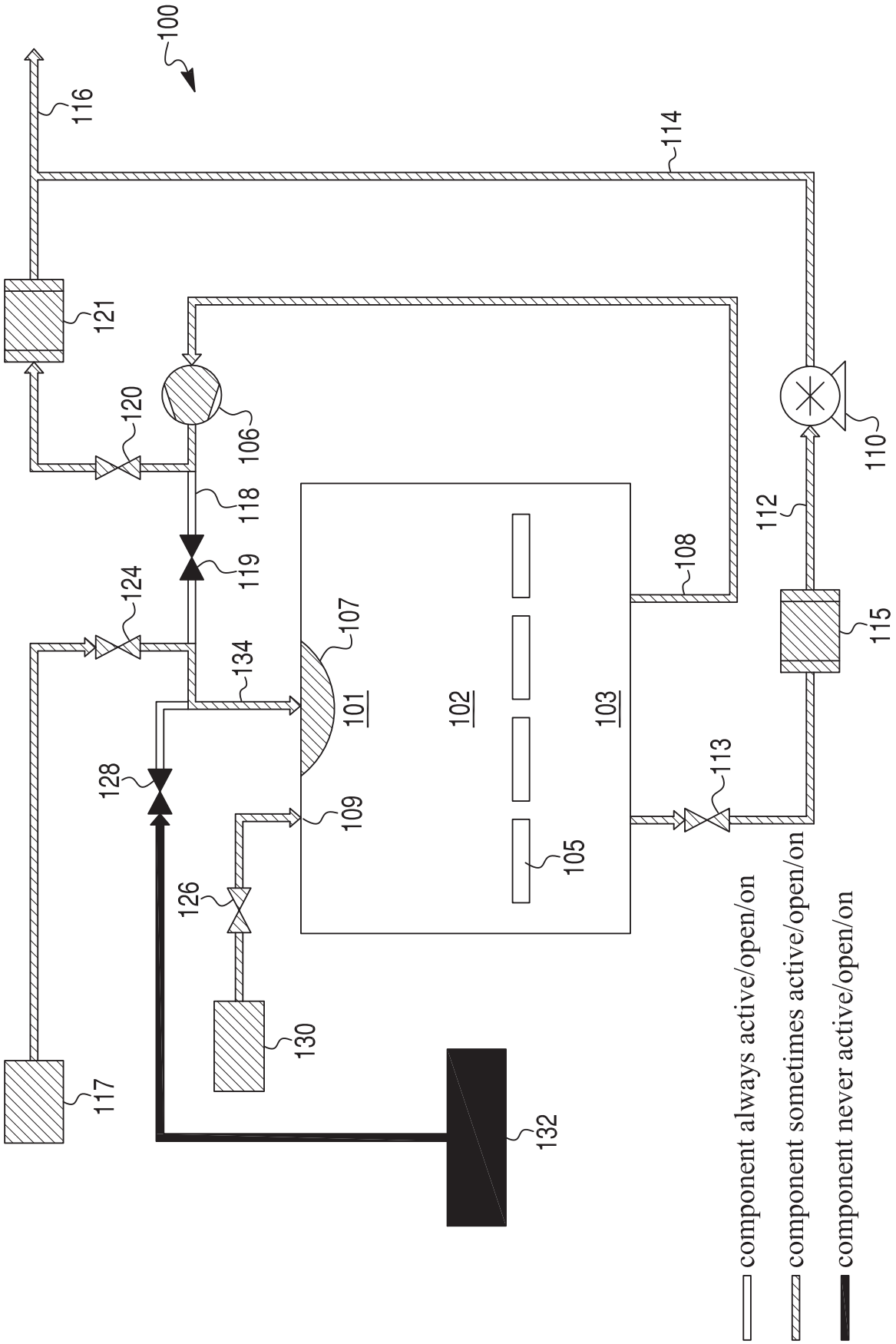
100
116
114
121
120
106
118
119
124
134
107
101
102
103
108
112
110
115
128
109
113
126
105
130
117
132
component always active/open/on
component sometimes active/open/on
component never active/open/on

FIG. 4C

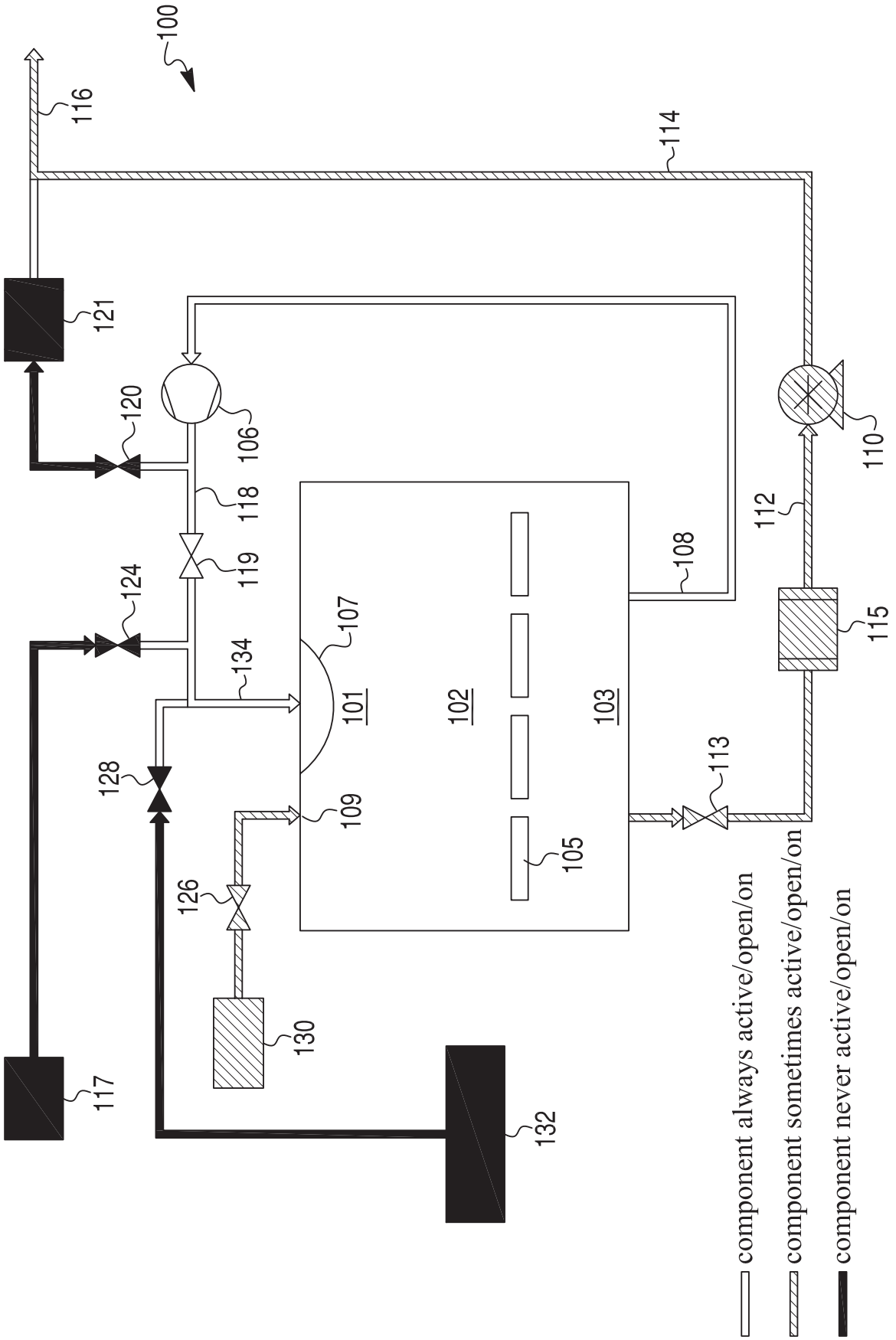
100
116
114
121
120
106
118
119
124
134
107
101
102
103
108
112
110
115
128
109
113
126
105
130
132
117
component always active/open/on
component sometimes active/open/on
component never active/open/on