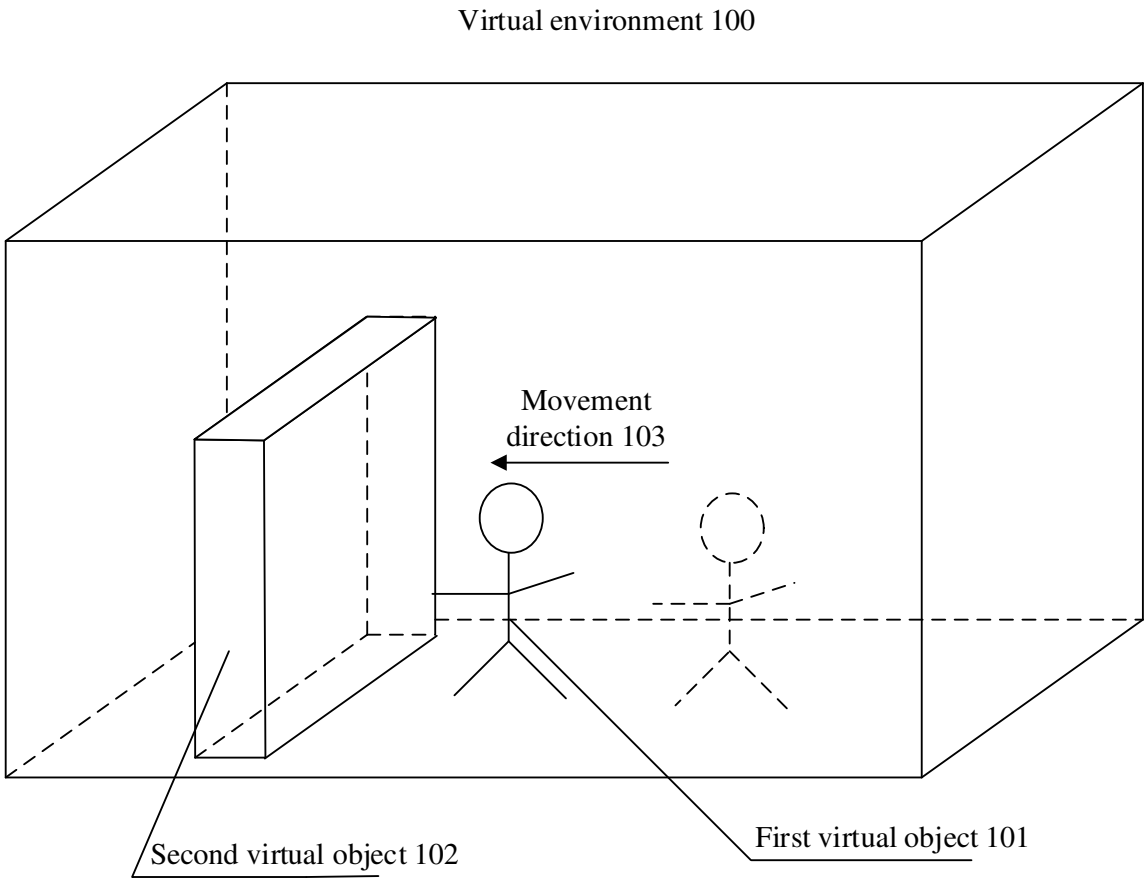
Virtual environment 100
Movement direction 103
Second virtual object 102
First virtual object 101

FIG. 1

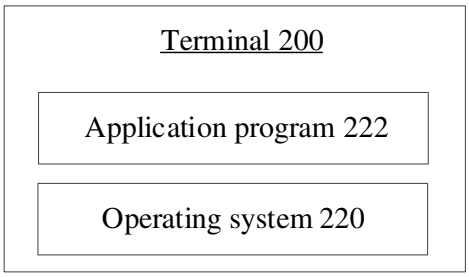
Terminal 200
Application program 222
Operating system 220

FIG. 2

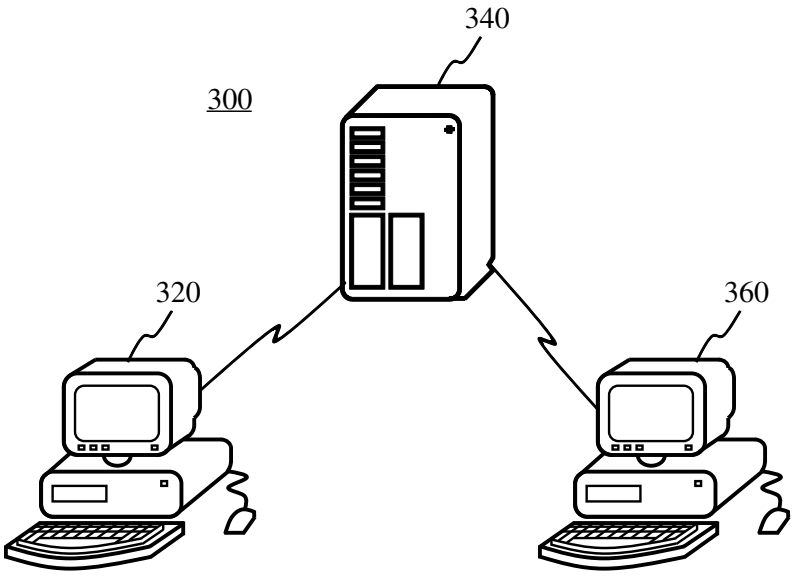
340
300
320
360

FIG. 3

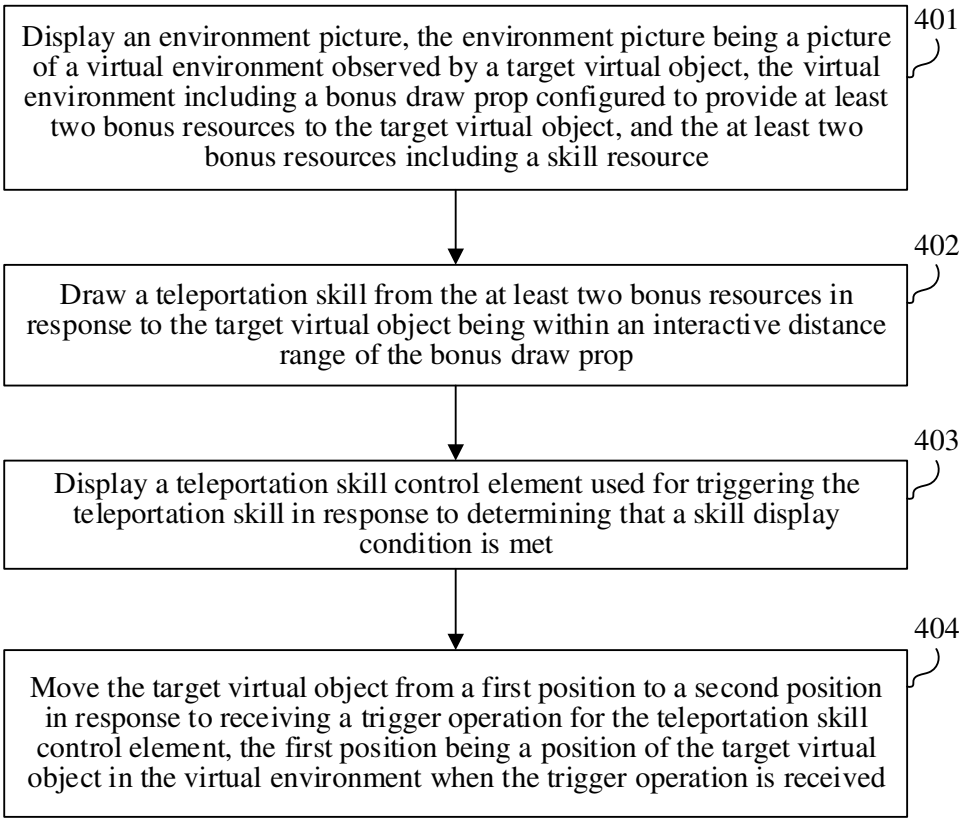
Display an environment picture, the environment picture being a picture of a virtual environment observed by a target virtual object, the virtual environment including a bonus draw prop configured to provide at least two bonus resources to the target virtual object, and the at least two bonus resources including a skill resource
401
Draw a teleportation skill from the at least two bonus resources in response to the target virtual object being within an interactive distance range of the bonus draw prop
402
Display a teleportation skill control element used for triggering the teleportation skill in response to determining that a skill display condition is met
403
Move the target virtual object from a first position to a second position in response to receiving a trigger operation for the teleportation skill control element, the first position being a position of the target virtual object in the virtual environment when the trigger operation is received
404

FIG. 4

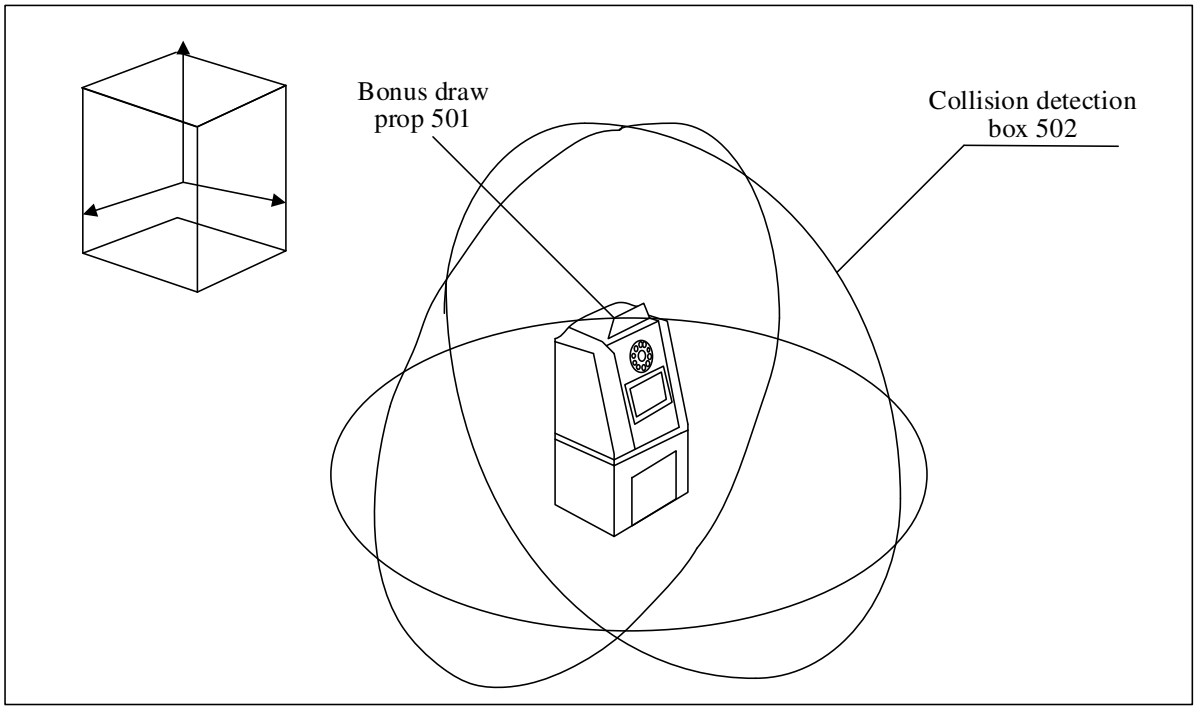
Bonus draw prop 501
Collision detection box 502

FIG. 5

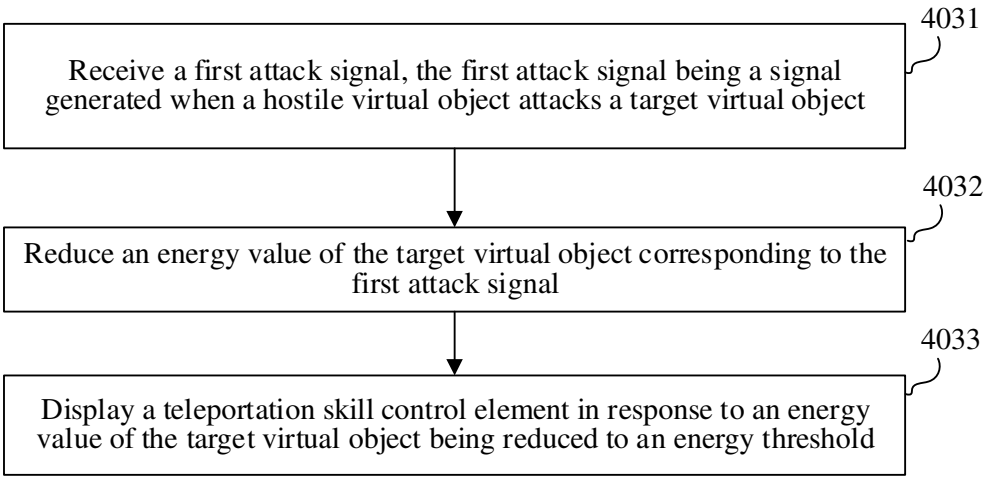
4031
Receive a first attack signal, the first attack signal being a signal generated when a hostile virtual object attacks a target virtual object
4032
Reduce an energy value of the target virtual object corresponding to the first attack signal
4033
Display a teleportation skill control element in response to an energy value of the target virtual object being reduced to an energy threshold

FIG. 6

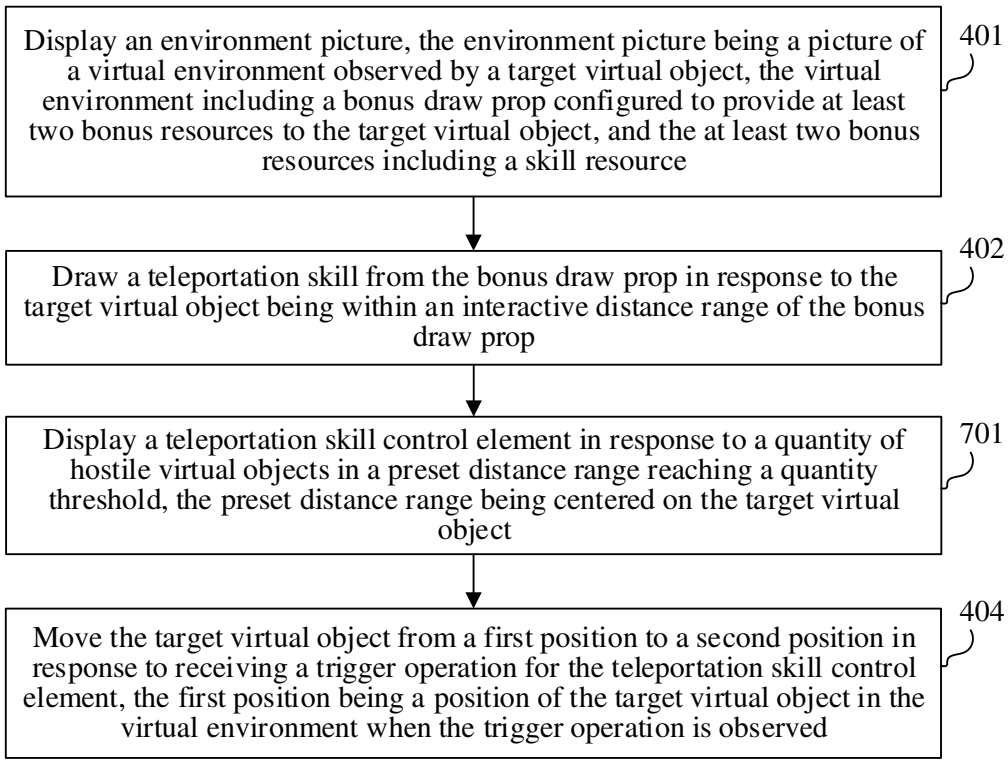
Display an environment picture, the environment picture being a picture of a virtual environment observed by a target virtual object, the virtual environment including a bonus draw prop configured to provide at least two bonus resources to the target virtual object, and the at least two bonus resources including a skill resource
401
Draw a teleportation skill from the bonus draw prop in response to the target virtual object being within an interactive distance range of the bonus draw prop
402
Display a teleportation skill control element in response to a quantity of hostile virtual objects in a preset distance range reaching a quantity threshold, the preset distance range being centered on the target virtual object
701
Move the target virtual object from a first position to a second position in response to receiving a trigger operation for the teleportation skill control element, the first position being a position of the target virtual object in the virtual environment when the trigger operation is observed
404

FIG. 7

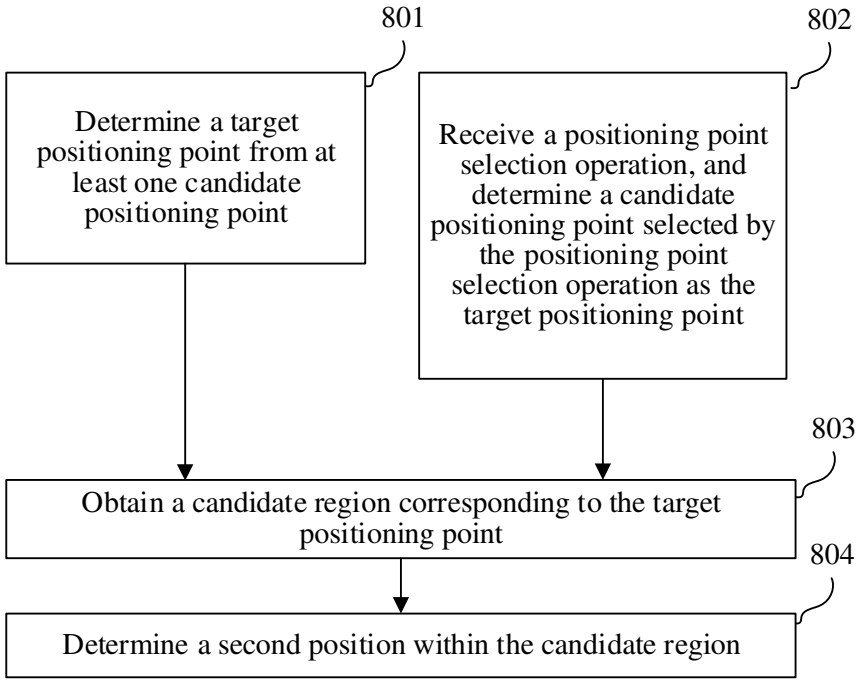
801
Determine a target positioning point from at least one candidate positioning point
802
Receive a positioning point selection operation, and determine a candidate positioning point selected by the positioning point selection operation as the target positioning point
803
Obtain a candidate region corresponding to the target positioning point
804
Determine a second position within the candidate region

FIG. 8

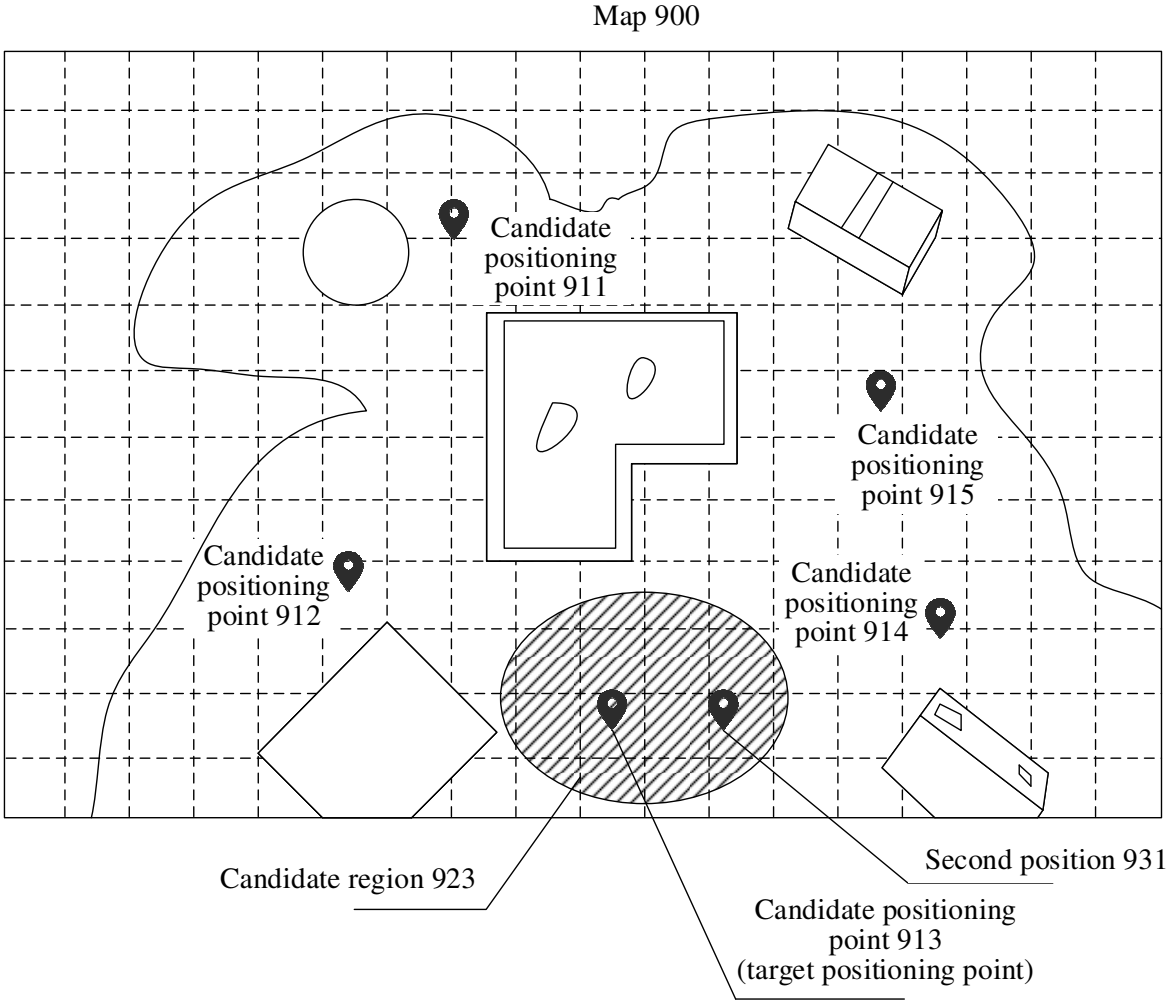
Map 900
Candidate positioning point 911
Candidate positioning point 915
Candidate positioning point 912
Candidate positioning point 914
Second position 931
Candidate region 923
Candidate positioning point 913 (target positioning point)

FIG. 9

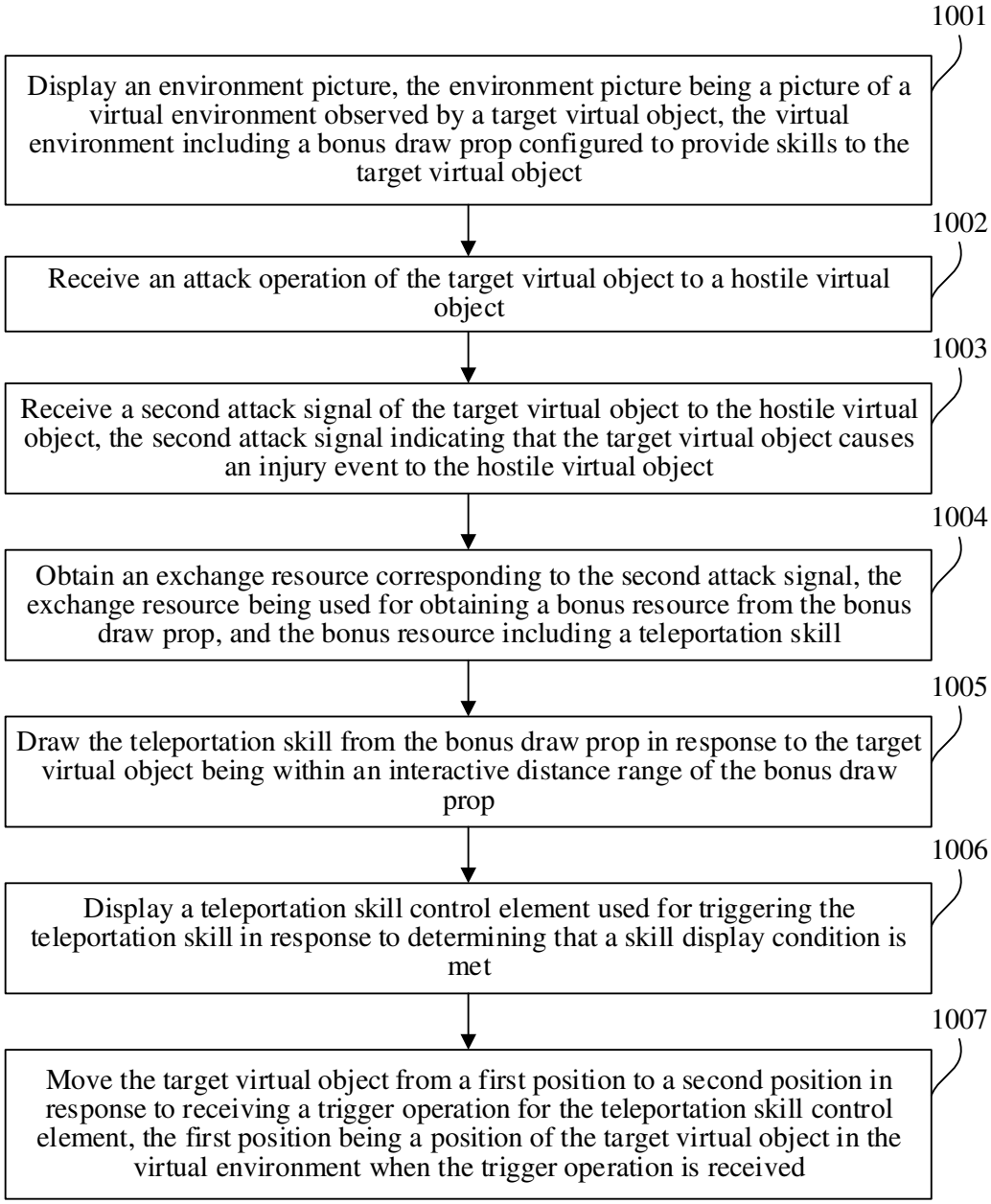
1001
Display an environment picture, the environment picture being a picture of a virtual environment observed by a target virtual object, the virtual environment including a bonus draw prop configured to provide skills to the target virtual object
1002
Receive an attack operation of the target virtual object to a hostile virtual object
1003
Receive a second attack signal of the target virtual object to the hostile virtual object, the second attack signal indicating that the target virtual object causes an injury event to the hostile virtual object
1004
Obtain an exchange resource corresponding to the second attack signal, the exchange resource being used for obtaining a bonus resource from the bonus draw prop, and the bonus resource including a teleportation skill
1005
Draw the teleportation skill from the bonus draw prop in response to the target virtual object being within an interactive distance range of the bonus draw prop
1006
Display a teleportation skill control element used for triggering the teleportation skill in response to determining that a skill display condition is met
1007
Move the target virtual object from a first position to a second position in response to receiving a trigger operation for the teleportation skill control element, the first position being a position of the target virtual object in the virtual environment when the trigger operation is received

FIG. 10

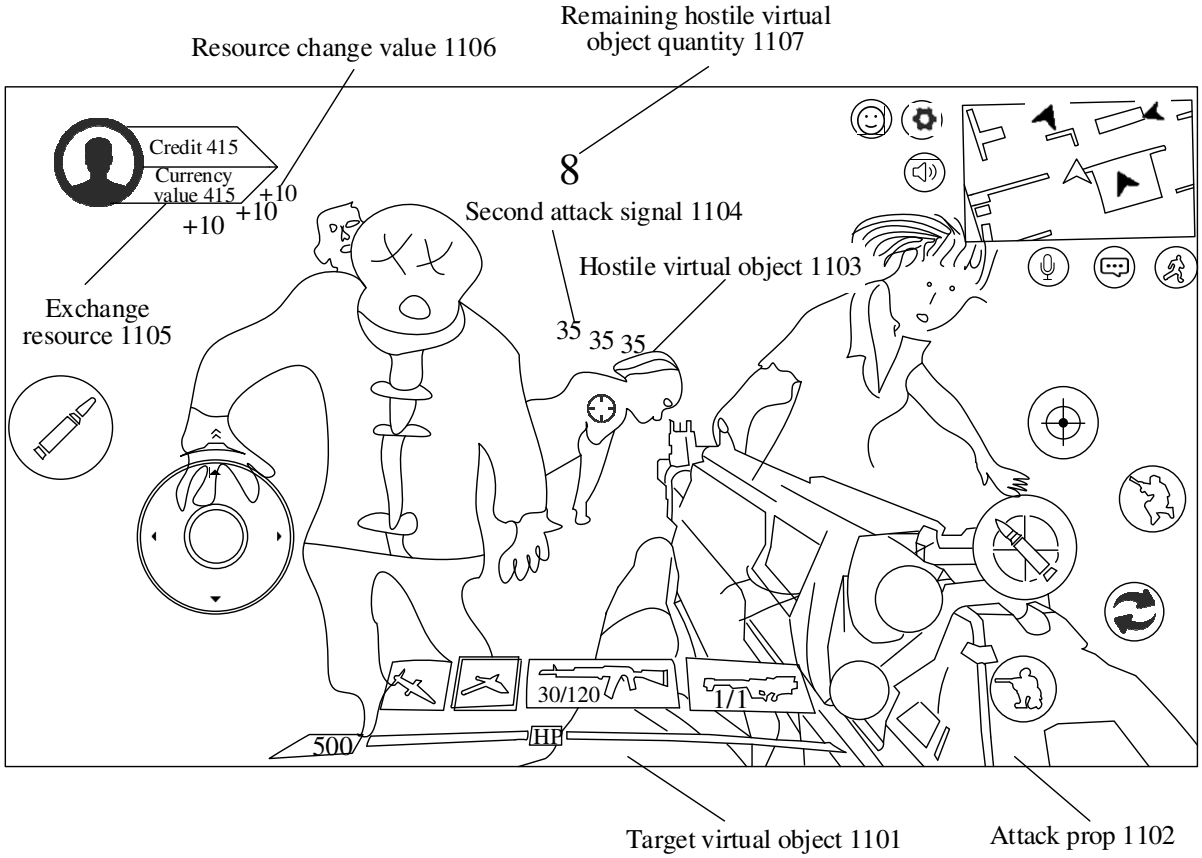
Remaining hostile virtual object quantity 1107
Resource change value 1106
Credit 415
Currency value 415
+10
+10
+10
8
Second attack signal 1104
Hostile virtual object 1103
Exchange resource 1105
35 35 35
30/120
1/1
500
HP
Target virtual object 1101
Attack prop 1102

FIG. 11

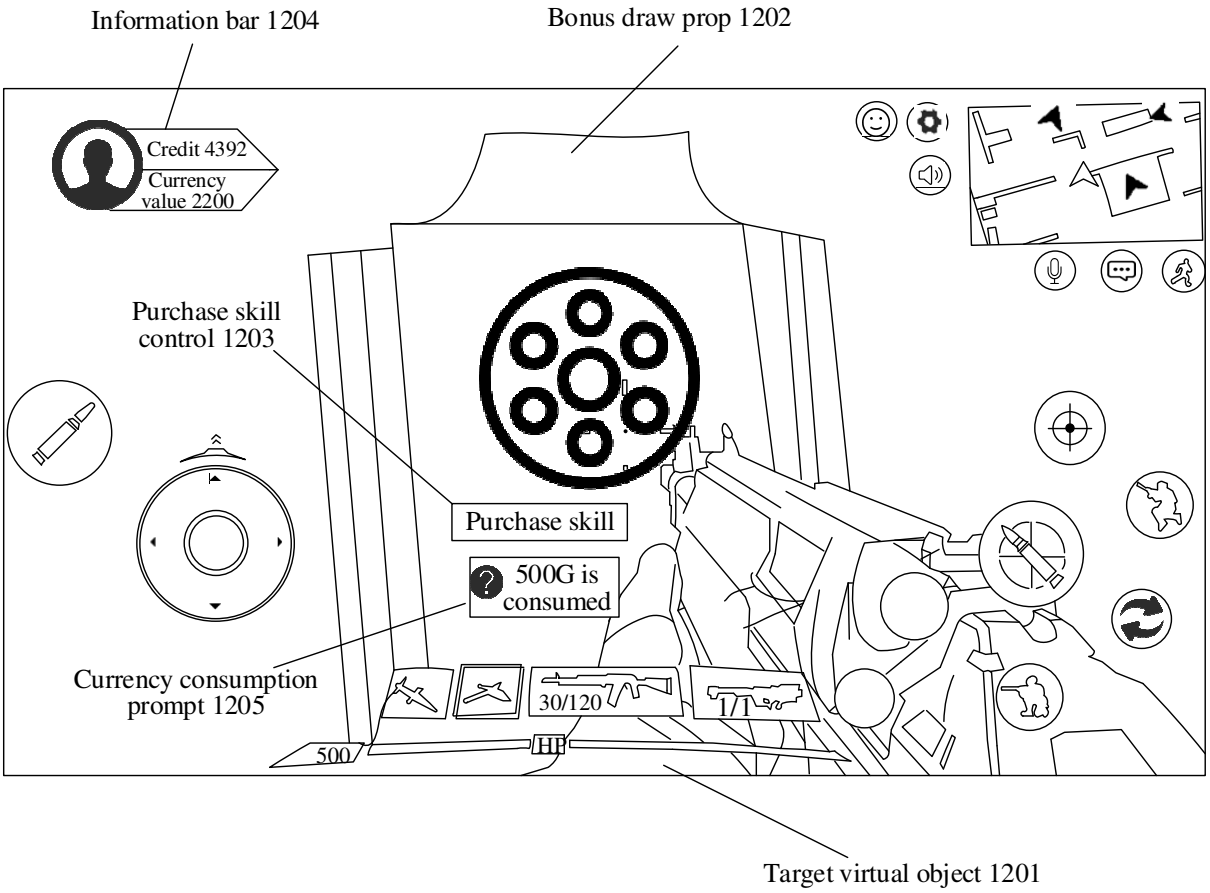
Information bar 1204
Bonus draw prop 1202
Credit 4392
Currency value 2200
Purchase skill control 1203
Purchase skill
500G is consumed
Currency consumption prompt 1205
30/120
1/1
500
HP
Target virtual object 1201

FIG. 12

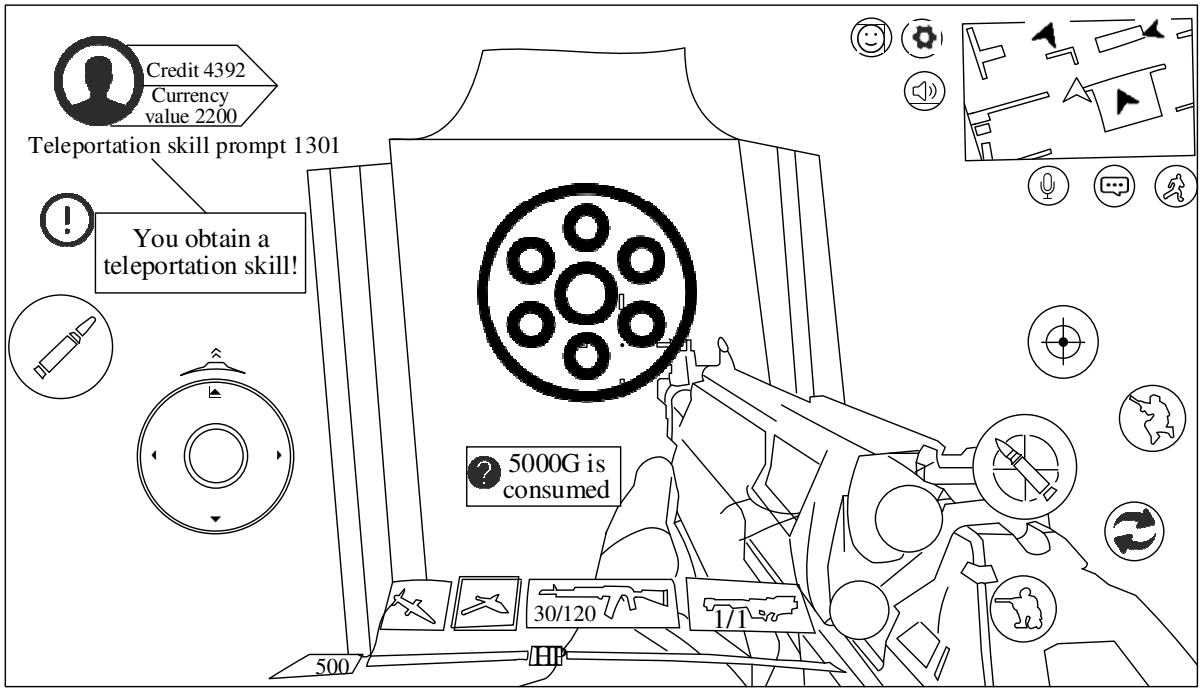
Credit 4392
Currency value 2200
Teleportation skill prompt 1301
You obtain a teleportation skill!
5000G is consumed
30/120
1/1
500
HP

FIG. 13

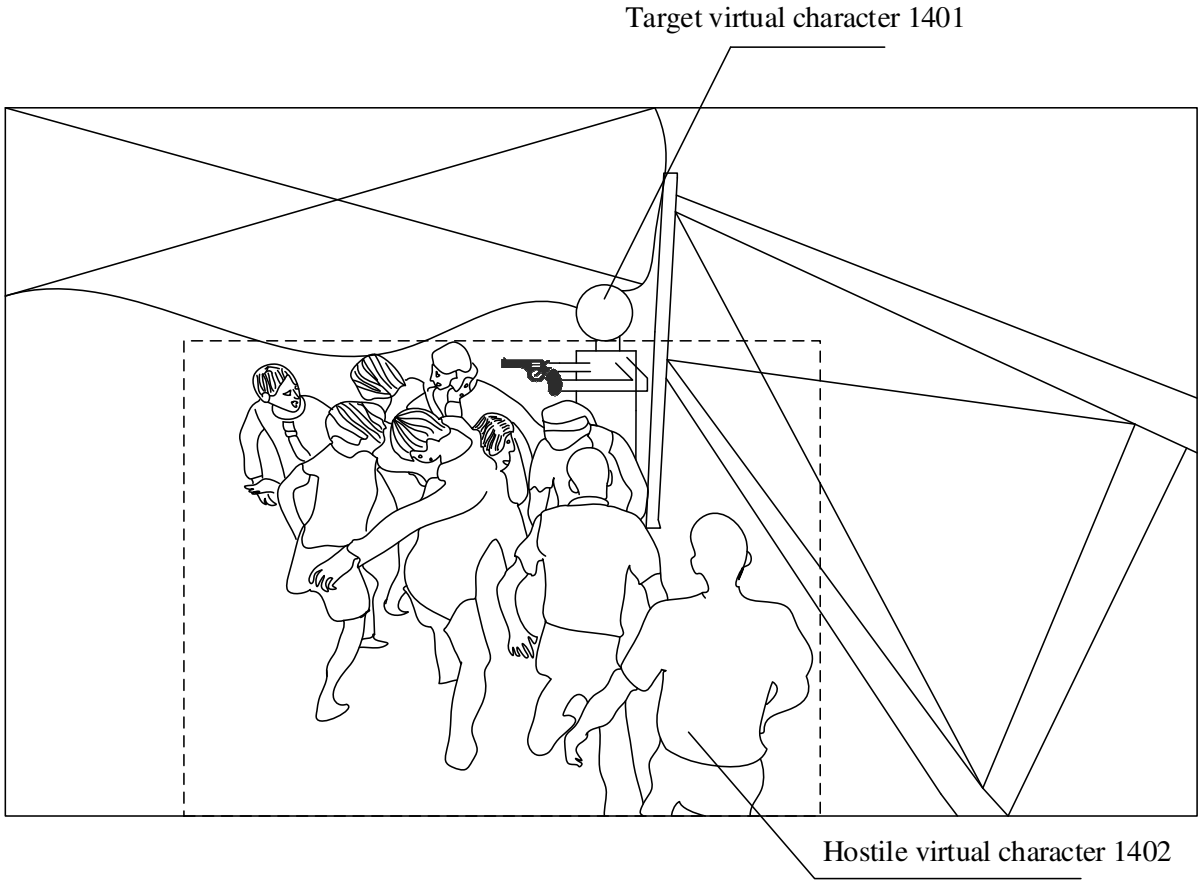
Target virtual character 1401
Hostile virtual character 1402

FIG. 14

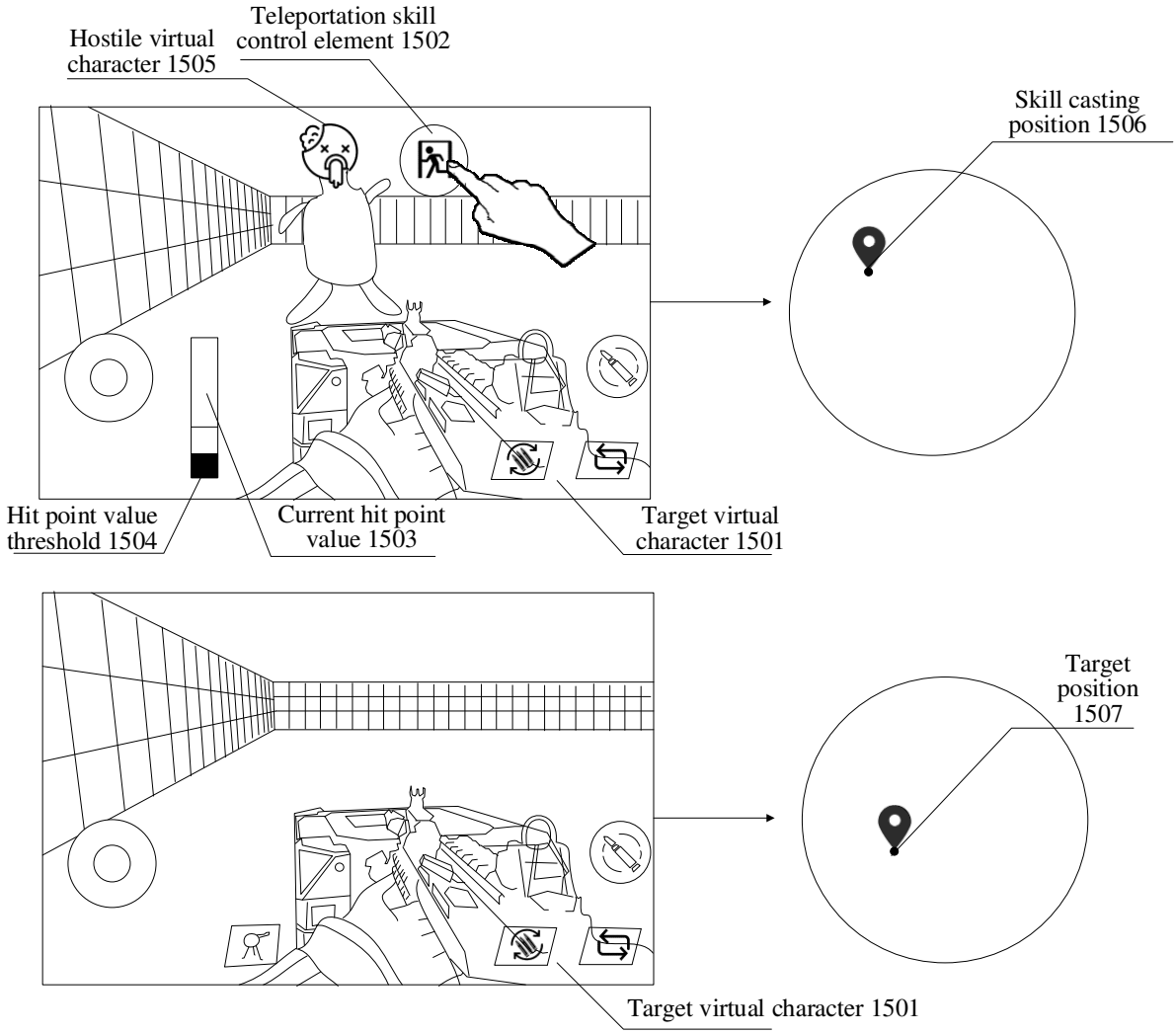
Hostile virtual character 1505
Teleportation skill control element 1502
Skill casting position 1506
Hit point value threshold 1504
Current hit point value 1503
Target virtual character 1501
Target position 1507
Target virtual character 1501

FIG. 15

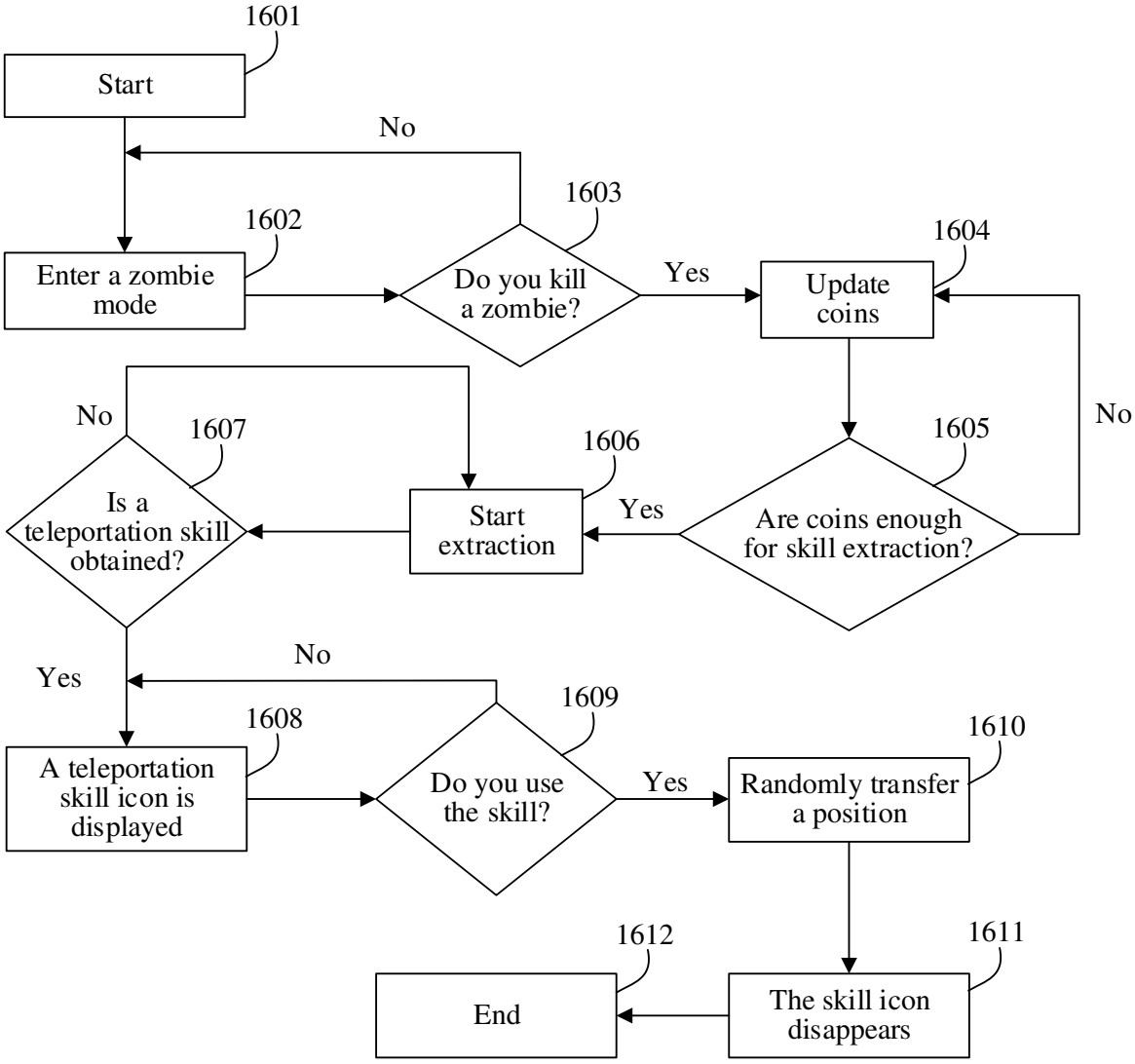
1601
Start
No
1603
1602
Enter a zombie mode
Do you kill a zombie?
Yes
1604
Update coins
No
No
1607
1606
1605
Is a teleportation skill obtained?
Start extraction
Yes
Are coins enough for skill extraction?
Yes
No
1609
1608
1610
A teleportation skill icon is displayed
Do you use the skill?
Yes
Randomly transfer a position
1612
1611
End
The skill icon disappears

FIG. 16

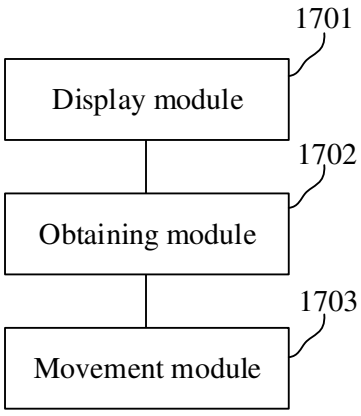
1701
Display module
1702
Obtaining module
1703
Movement module

FIG. 17

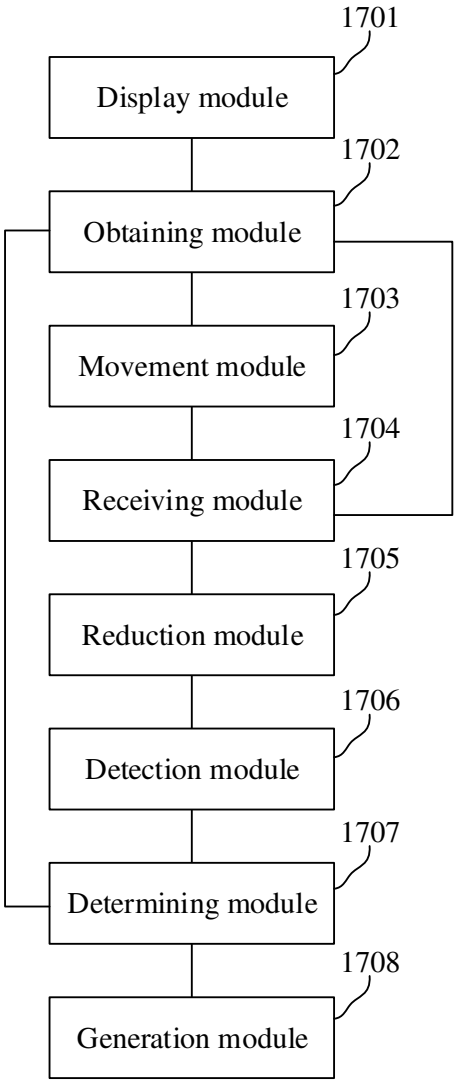
1701
Display module
1702
Obtaining module
1703
Movement module
1704
Receiving module
1705
Reduction module
1706
Detection module
1707
Determining module
1708
Generation module

FIG. 18

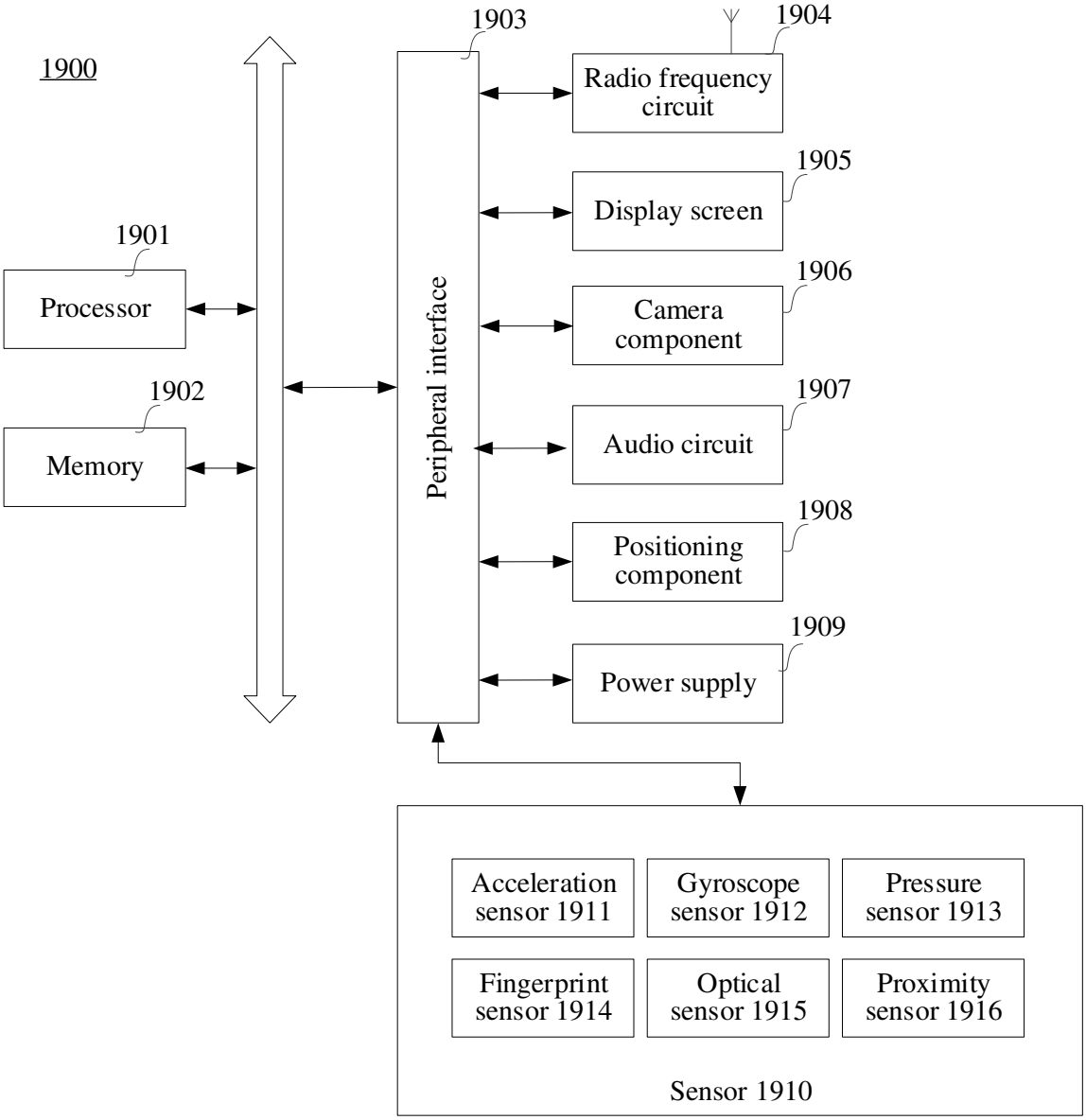
1900
1901
Processor
1902
Memory
1903
Peripheral interface
1904
Radio frequency circuit
1905
Display screen
1906
Camera component
1907
Audio circuit
1908
Positioning component
1909
Power supply
Acceleration sensor 1911
Gyroscope sensor 1912
Pressure sensor 1913
Fingerprint sensor 1914
Optical sensor 1915
Proximity sensor 1916
Sensor 1910

FIG. 19