(12) INTERNATIONAL APPLICATION PUBLISHED UNDER THE PATENT COOPERATION TREATY (PCT)

(19) World Intellectual Property Organization
International Bureau

(43) International Publication Date
15 August 2024 (15.08.2024)

WIPO | PCT

(10) International Publication Number
WO 2024/167864 A1

(51) International Patent Classification:
A63G 31/00 (2006.01) *A63J 5/02* (2006.01)

(21) International Application Number:
PCT/US2024/014500

(22) International Filing Date:
05 February 2024 (05.02.2024)

(25) Filing Language: English

(26) Publication Language: English

(30) Priority Data:
18/166,215 08 February 2023 (08.02.2023) US

(71) Applicant: **UNIVERSAL CITY STUDIOS LLC** [US/US]; 100 Universal City Plaza, Universal City, California 91608 (US).

(72) Inventors: **GORDON, Michael**; 1000 Universal Studios Plaza, Orlando, Florida 32819 (US). **ROSSETT, Matthew Robert**; 1000 Universal Studios Plaza, Orlando, Florida 32819 (US).

(74) Agent: **POWELL, W. Allen** et al.; P.O. Box 692289, Houston, Texas 77269 (US).

(81) Designated States *(unless otherwise indicated, for every kind of national protection available)*: AE, AG, AL, AM, AO, AT, AU, AZ, BA, BB, BG, BH, BN, BR, BW, BY, BZ, CA, CH, CL, CN, CO, CR, CU, CV, CZ, DE, DJ, DK, DM, DO, DZ, EC, EE, EG, ES, FI, GB, GD, GE, GH, GM, GT, HN, HR, HU, ID, IL, IN, IQ, IR, IS, IT, JM, JO, JP, KE, KG, KH, KN, KP, KR, KW, KZ, LA, LC, LK, LR, LS, LU, LY, MA, MD, MG, MK, MN, MU, MW, MX, MY, MZ, NA, NG, NI, NO, NZ, OM, PA, PE, PG, PH, PL, PT, QA, RO, RS, RU, RW, SA, SC, SD, SE, SG, SK, SL, ST, SV, SY, TH, TJ, TM, TN, TR, TT, TZ, UA, UG, US, UZ, VC, VN, WS, ZA, ZM, ZW.

(84) Designated States *(unless otherwise indicated, for every kind of regional protection available)*: ARIPO (BW, CV, GH, GM, KE, LR, LS, MW, MZ, NA, RW, SC, SD, SL, ST, SZ, TZ, UG, ZM, ZW), Eurasian (AM, AZ, BY, KG, KZ, RU, TJ, TM), European (AL, AT, BE, BG, CH, CY, CZ, DE, DK, EE, ES, FI, FR, GB, GR, HR, HU, IE, IS, IT, LT, LU, LV, MC, ME, MK, MT, NL, NO, PL, PT, RO, RS, SE, SI, SK, SM, TR), OAPI (BF, BJ, CF, CG, CI, CM, GA, GN, GQ, GW, KM, ML, MR, NE, SN, TD, TG).

Declarations under Rule 4.17:
— *as to applicant's entitlement to apply for and be granted a patent (Rule 4.17(ii))*
— *as to the applicant's entitlement to claim the priority of the earlier application (Rule 4.17(iii))*

(54) Title: SYSTEMS AND METHODS FOR A DRY STEAM SPECIAL EFFECT

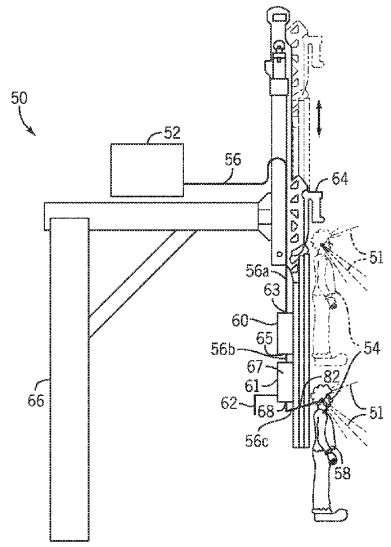

FIG. 1

(57) Abstract: A special effect system 50 may include a steam generator 52, a reheater 60, and a steam separator 61 configured to generate dry steam. The steam generator 52 is coupled to a show element 54 comprising a one or more compartments 58. Steam from the steam generator 52 passes through the reheater 60 and the steam separator 61 before entering the one or more compartments 58 such that condensate is removed and cooling of the steam within the system 50 between the steam generator 52 and the show element 54 is remedied.

WO 2024/167864 A1

[Continued on next page]

Published:
— *with international search report (Art. 21(3))*