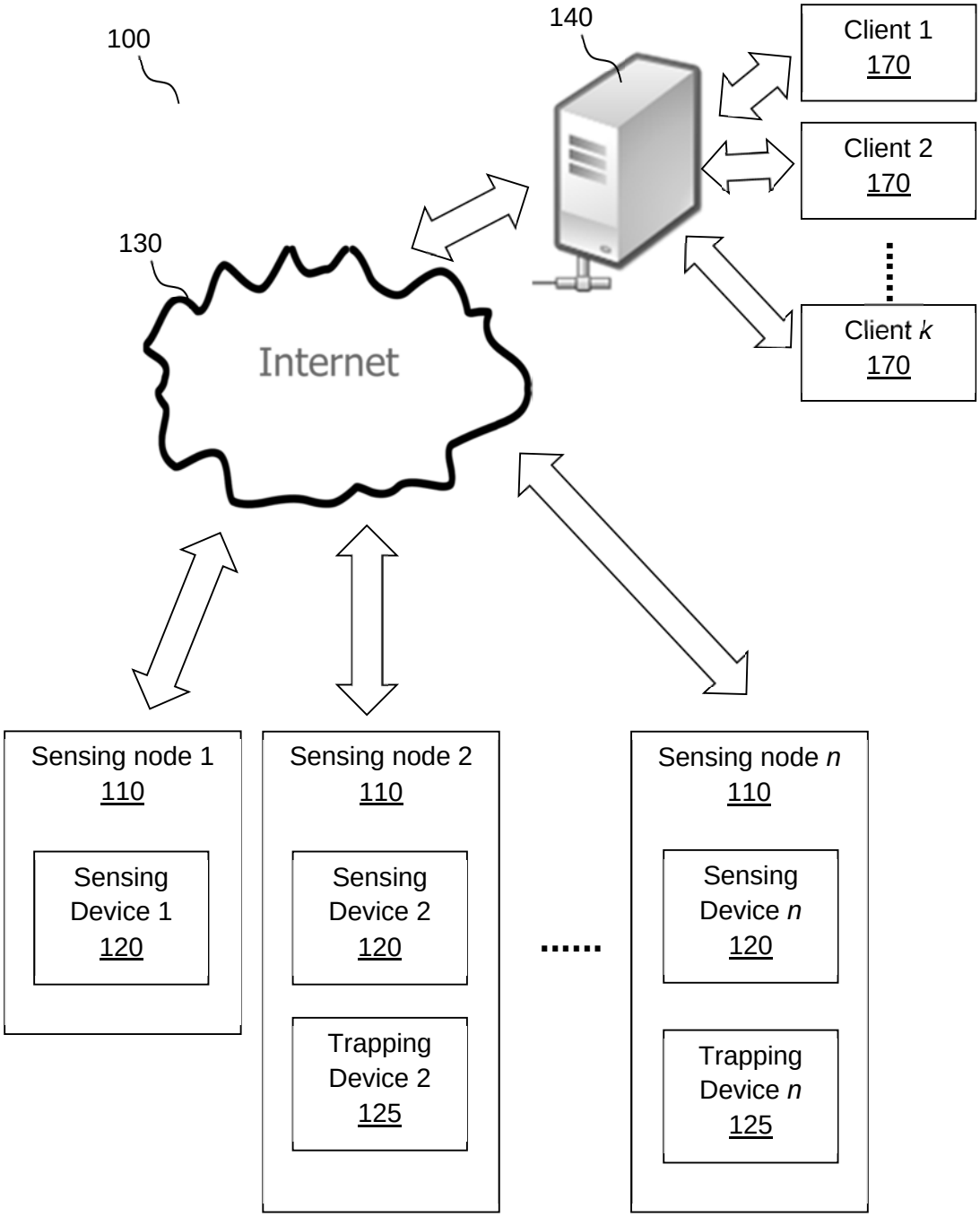
100
140
Client 1
170
Client 2
170
Client k
170
130
Internet
Sensing node 1
110
Sensing
Device 1
120
Sensing node 2
110
Sensing
Device 2
120
Trapping
Device 2
125
Sensing node n
110
Sensing
Device n
120
Trapping
Device n
125

FIG. 1

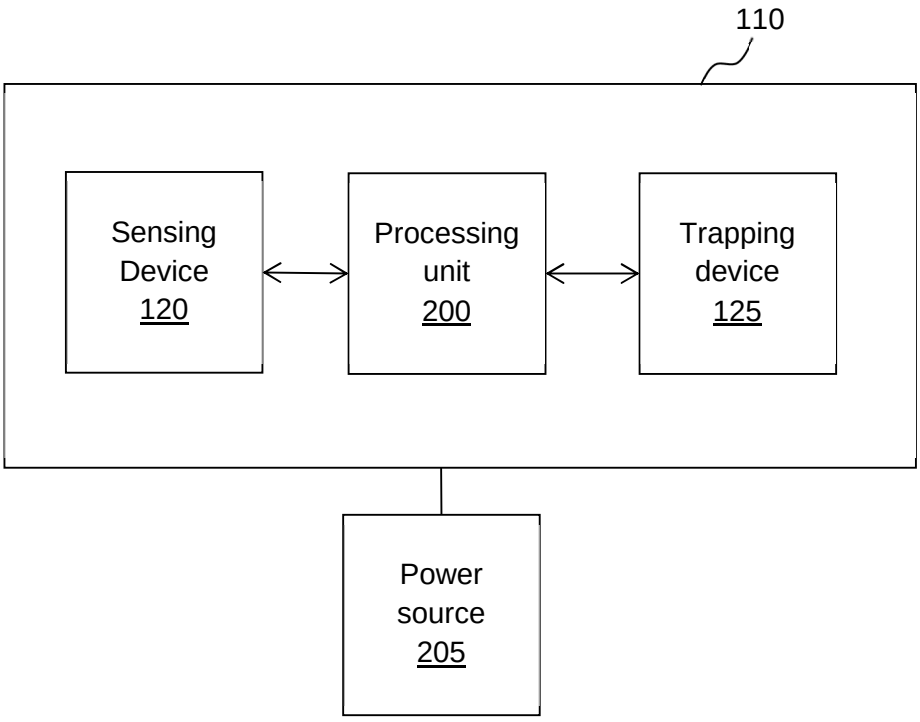
110
Sensing Device 120
Processing unit 200
Trapping device 125
Power source 205

FIG. 2

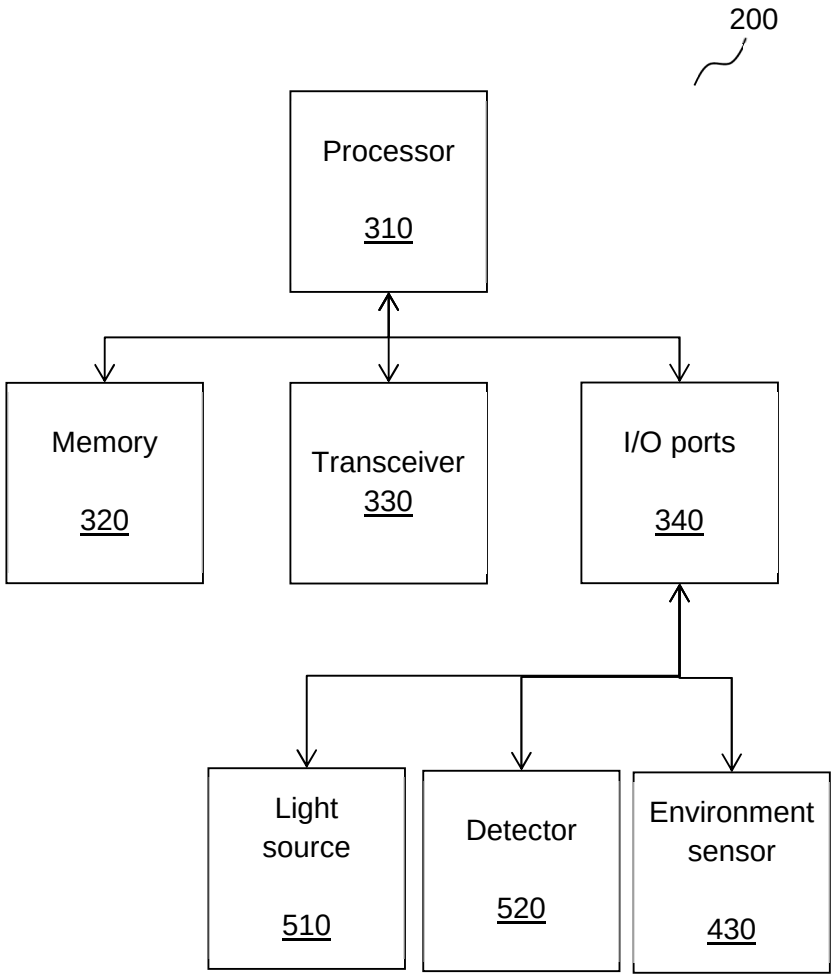
200
Processor
310
Memory
320
Transceiver
330
I/O ports
340
Light source
510
Detector
520
Environment sensor
430

FIG. 3

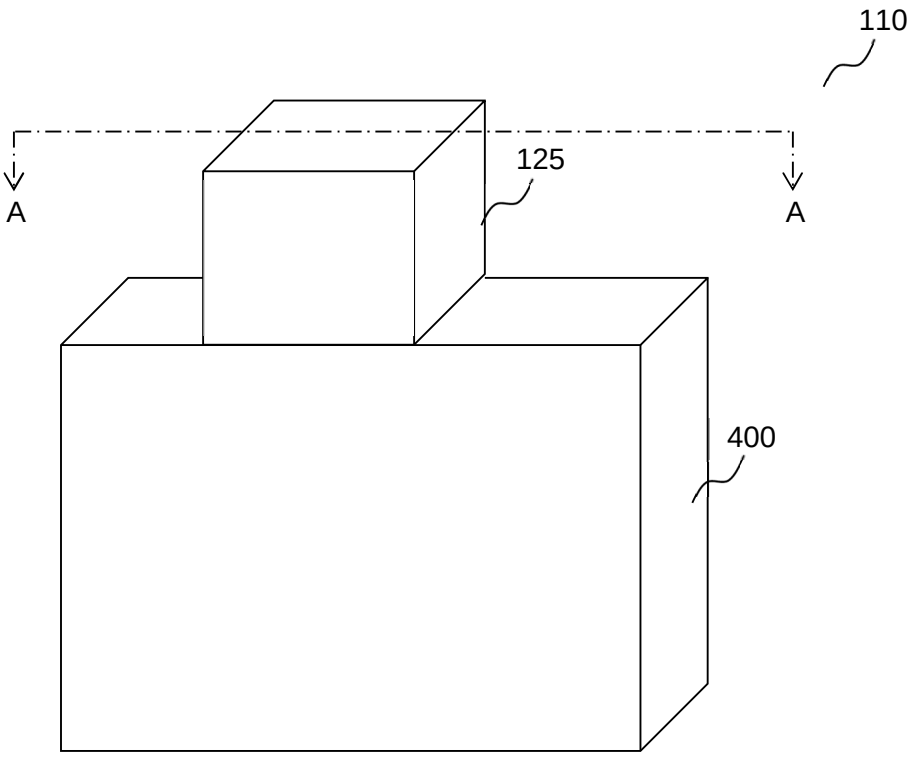
110
125
A
A
400

FIG. 4.1

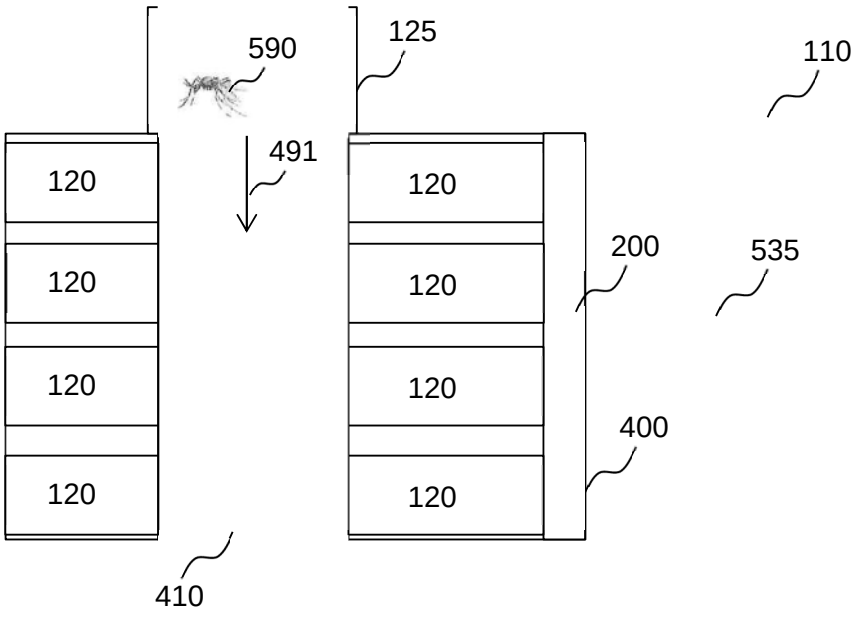
590
125
110
491
120
120
120
120
120
120
120
120
200
535
400
410

FIG. 4.2

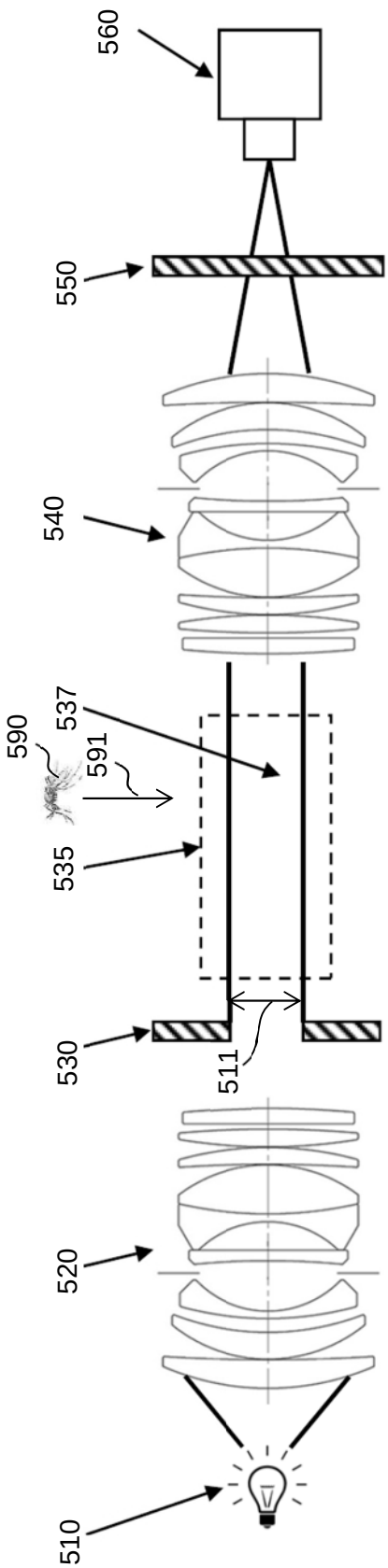
560
550
540
590
537
591
535
530
511
520
510

FIG. 5.1

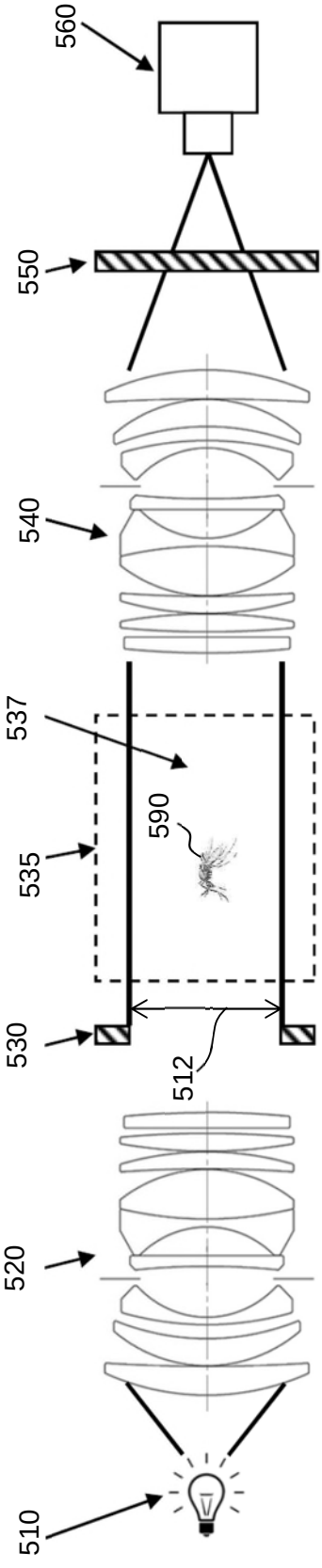
560
550
540
537
590
535
530
512
520
510

FIG. 5.2

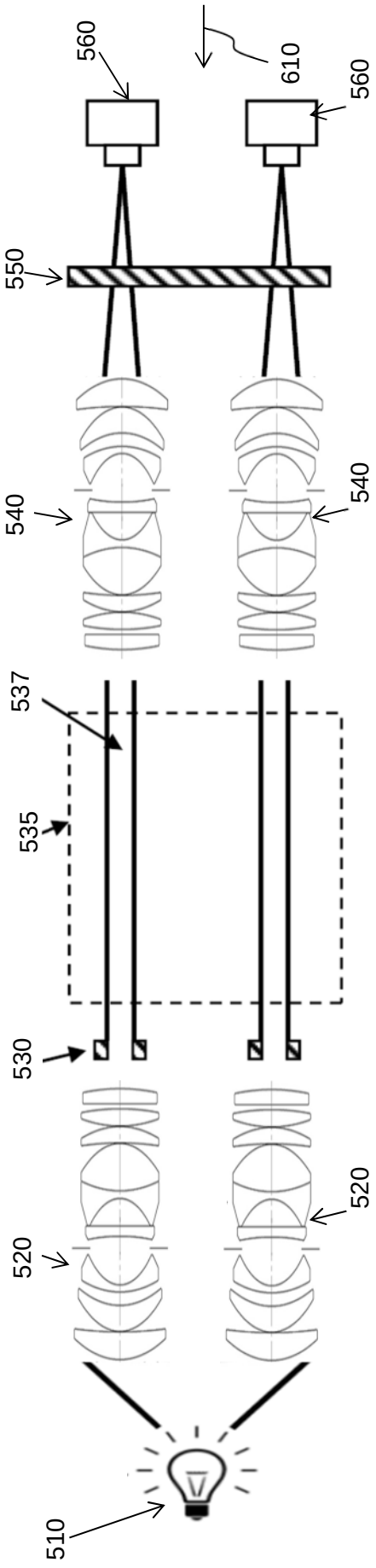
560
610
560
550
540
540
537
535
530
520
520
510

FIG. 6.1

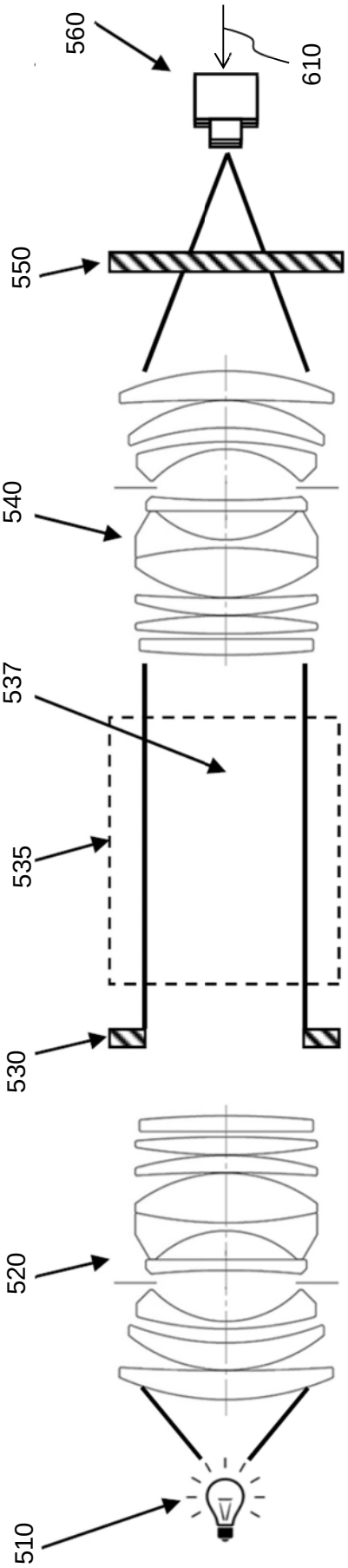
560
610
550
540
537
535
530
520
510

FIG. 6.2

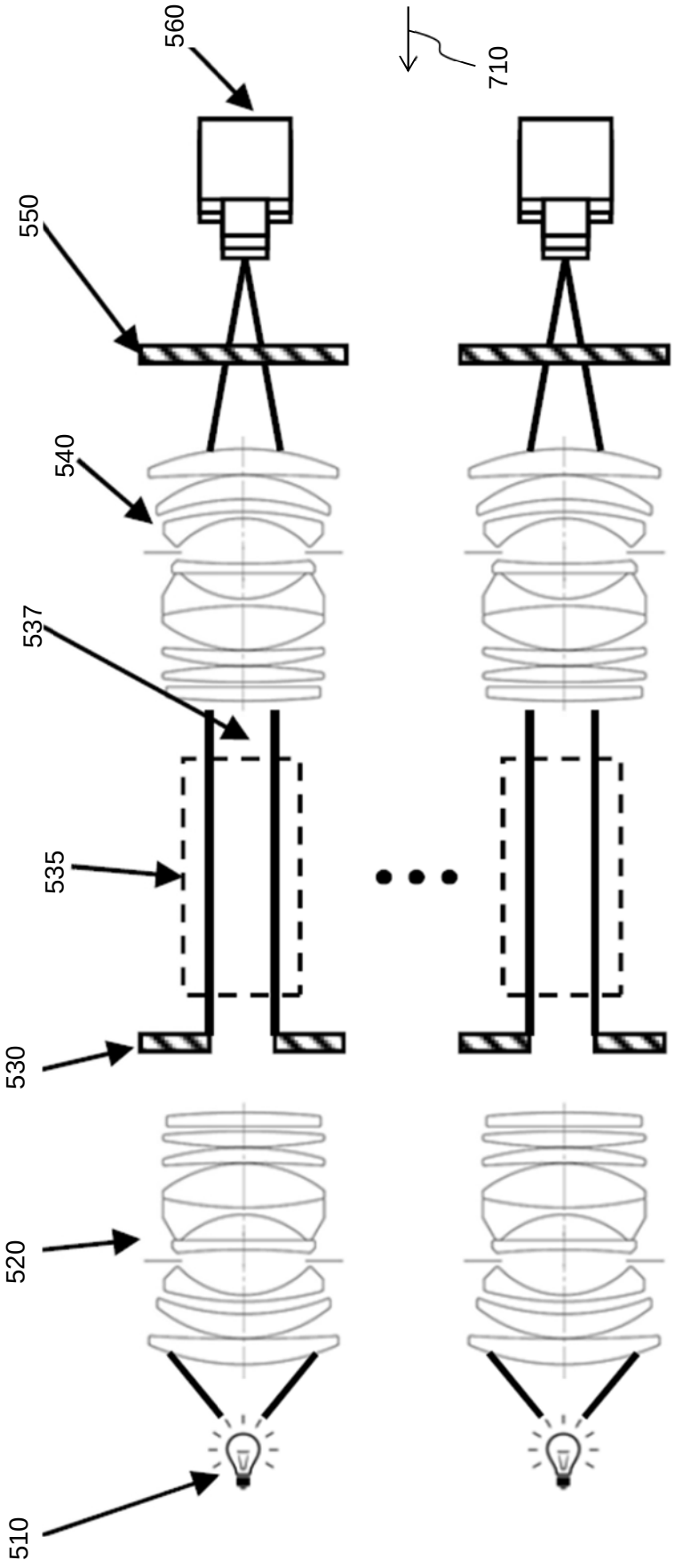

FIG. 7.1

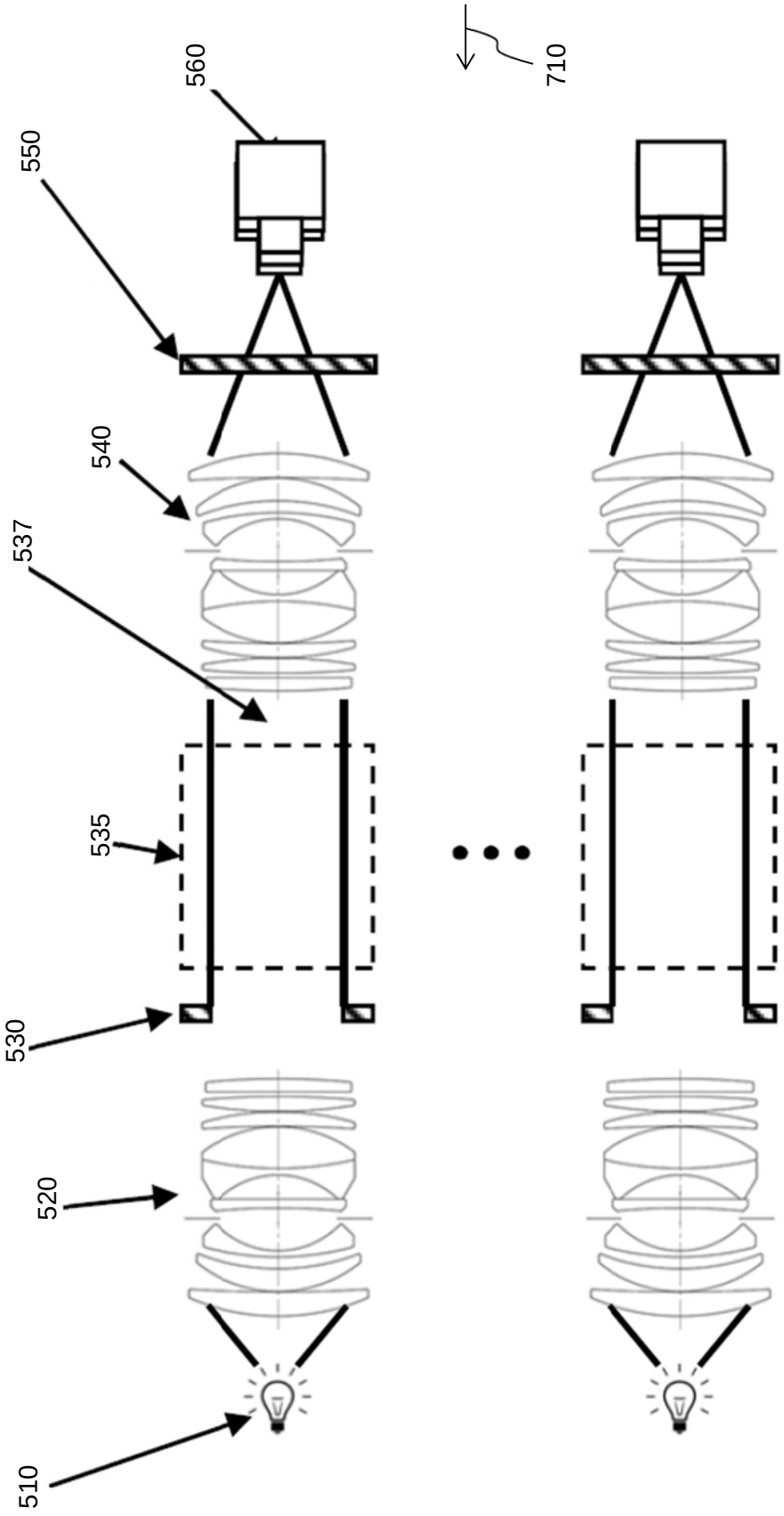

FIG. 7.2

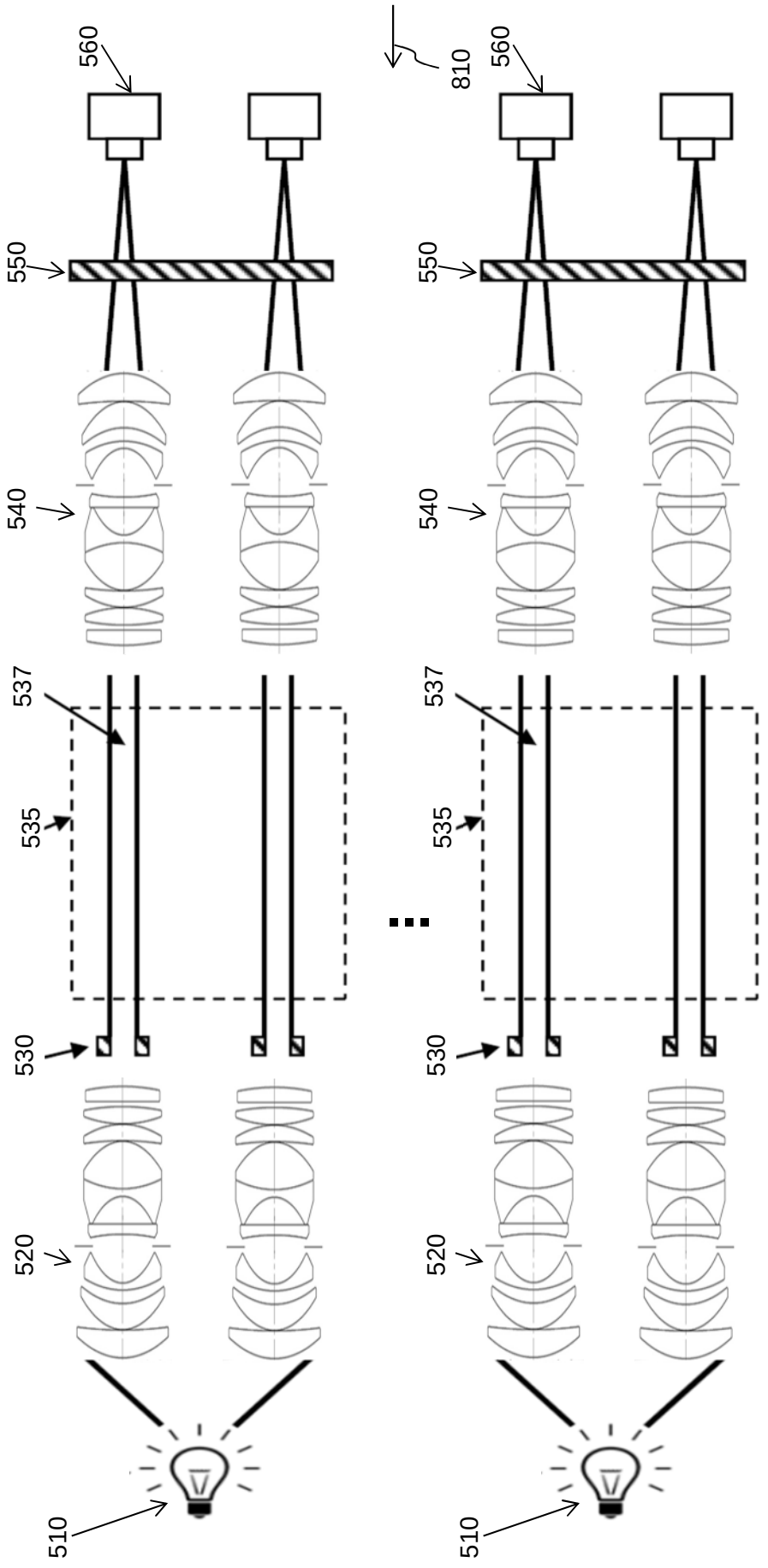
560
550
540
537
535
530
520
510
810
560
550
540
537
535
530
520
510

FIG. 8.1

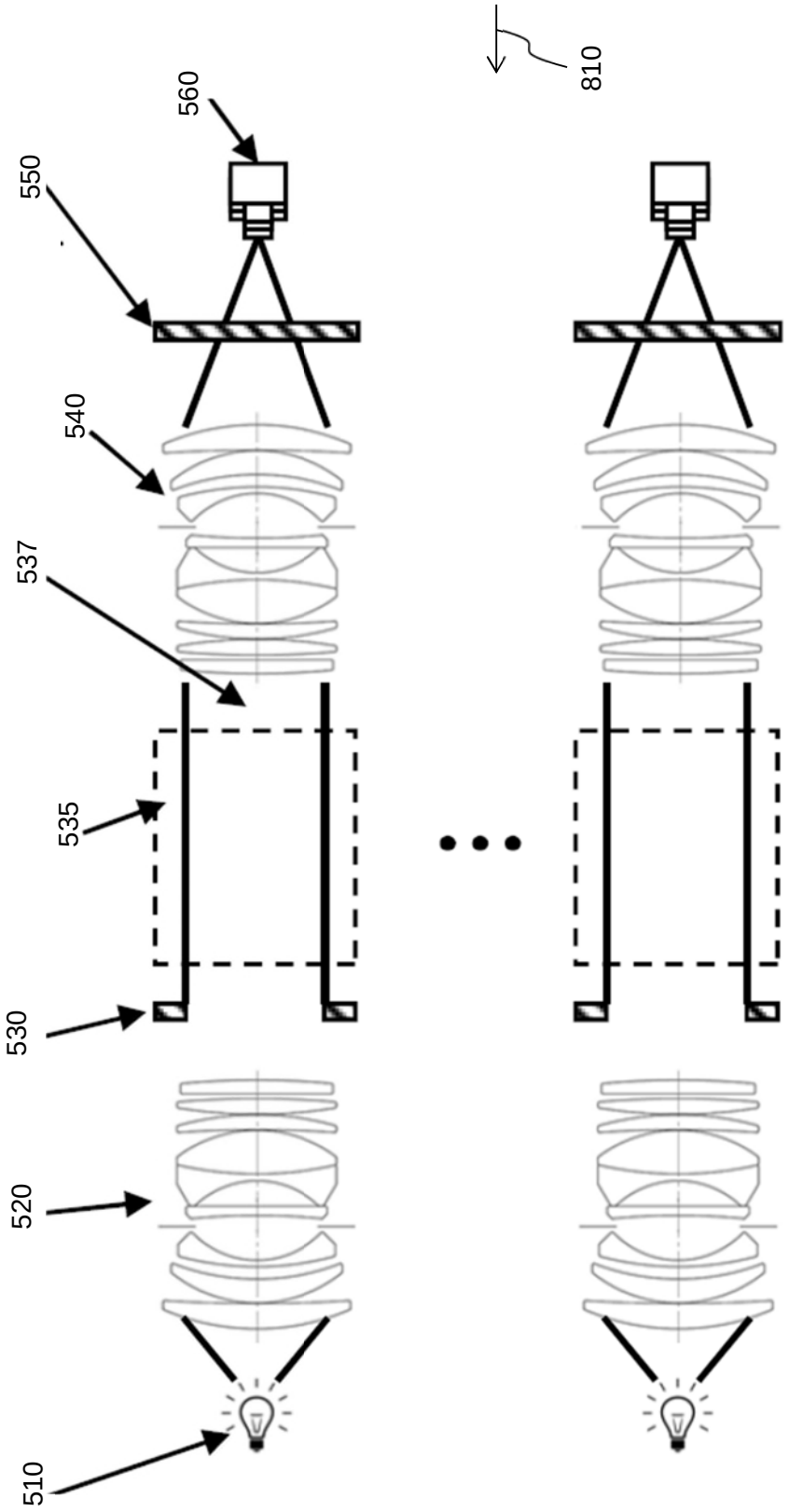

FIG. 8.2

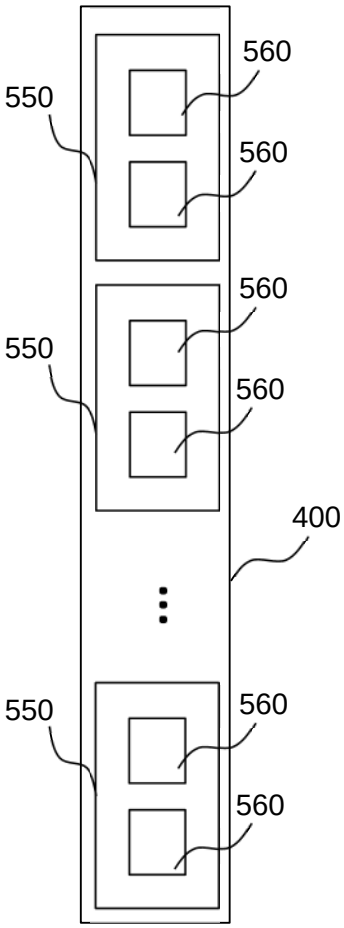
560
550
560
560
550
560
400
560
550
560

FIG. 9A

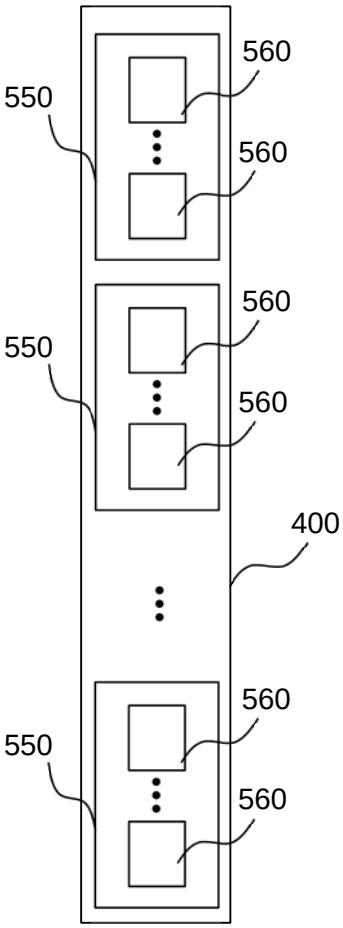
560
550
560
560
550
560
400
560
550
560

FIG. 9B

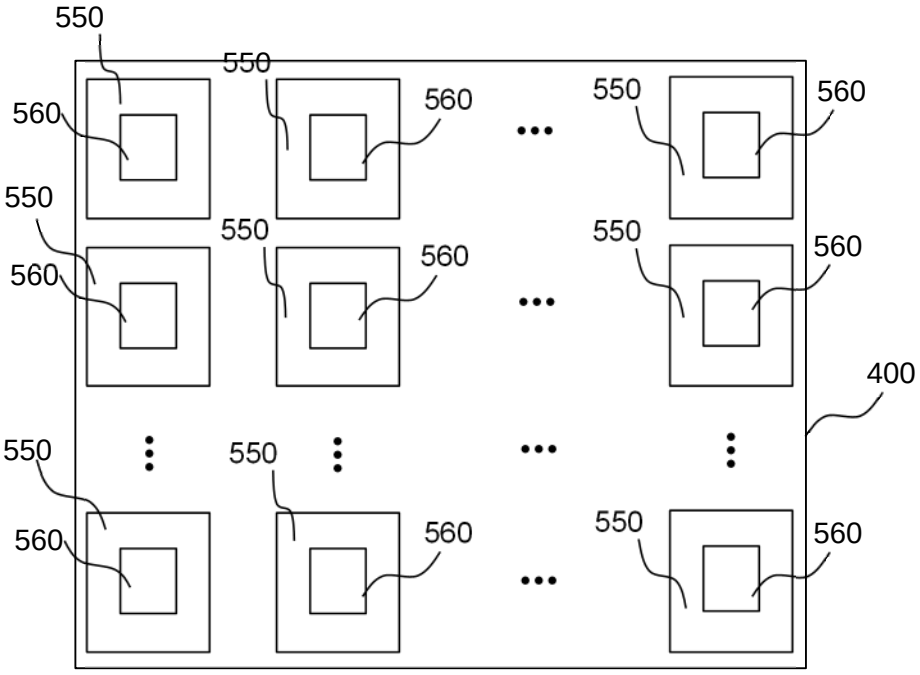

FIG. 10

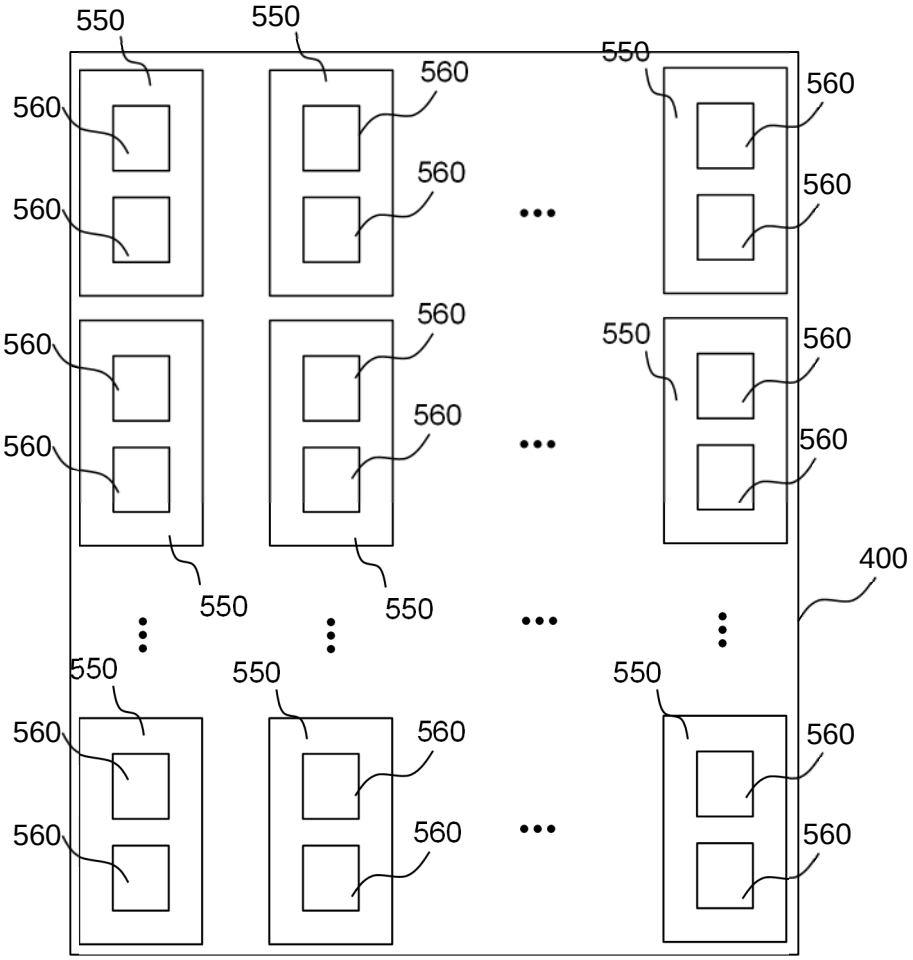
550
550
550
560
560
560
560
560
560
560
560
560
560
560
560
560
560
550
550
550
550
550
550
560
560
560
560
560
560
400

FIG. 11A

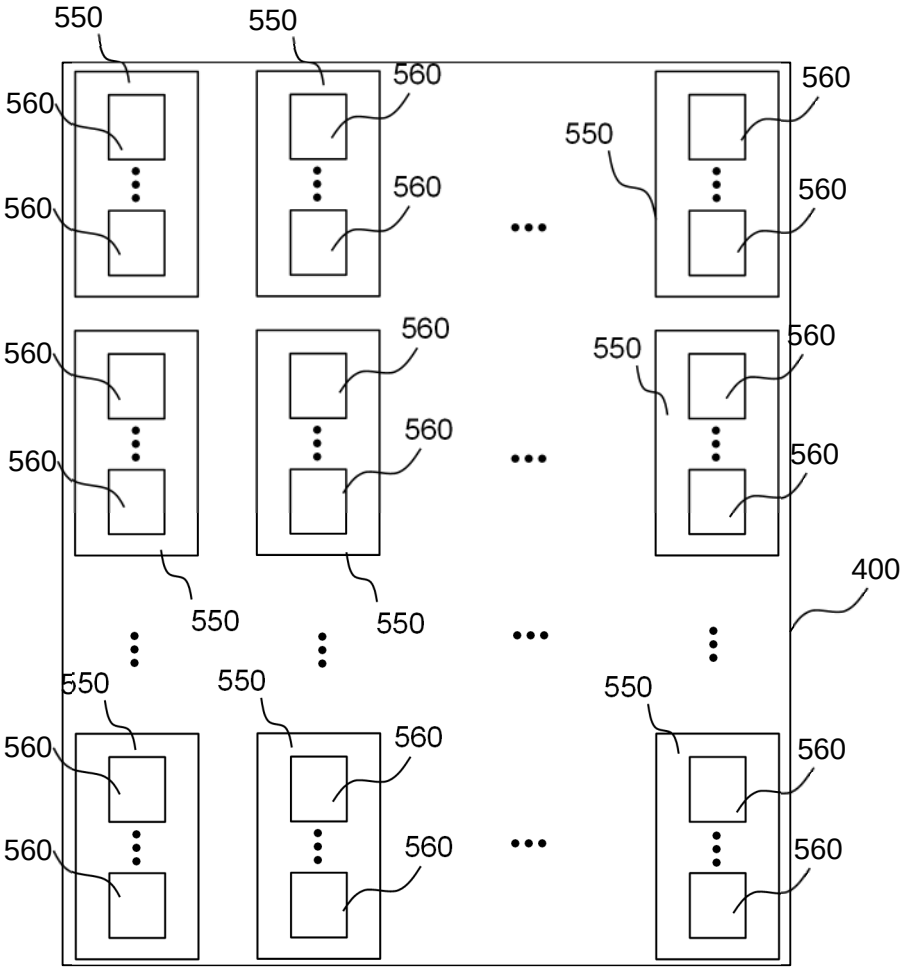
550
550
560
560
560
560
550
560
560
560
560
560
560
560
560
560
550
550
400
550
550
550
560
560
560
560
560
560

FIG. 11B

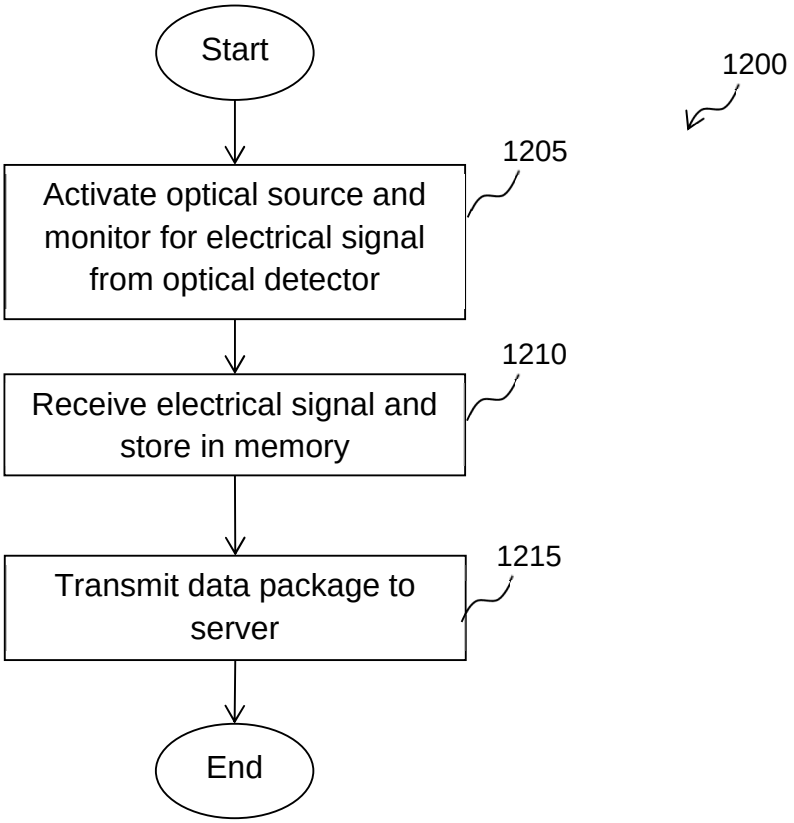
Start
1200
1205
Activate optical source and monitor for electrical signal from optical detector
1210
Receive electrical signal and store in memory
1215
Transmit data package to server
End

FIG. 12

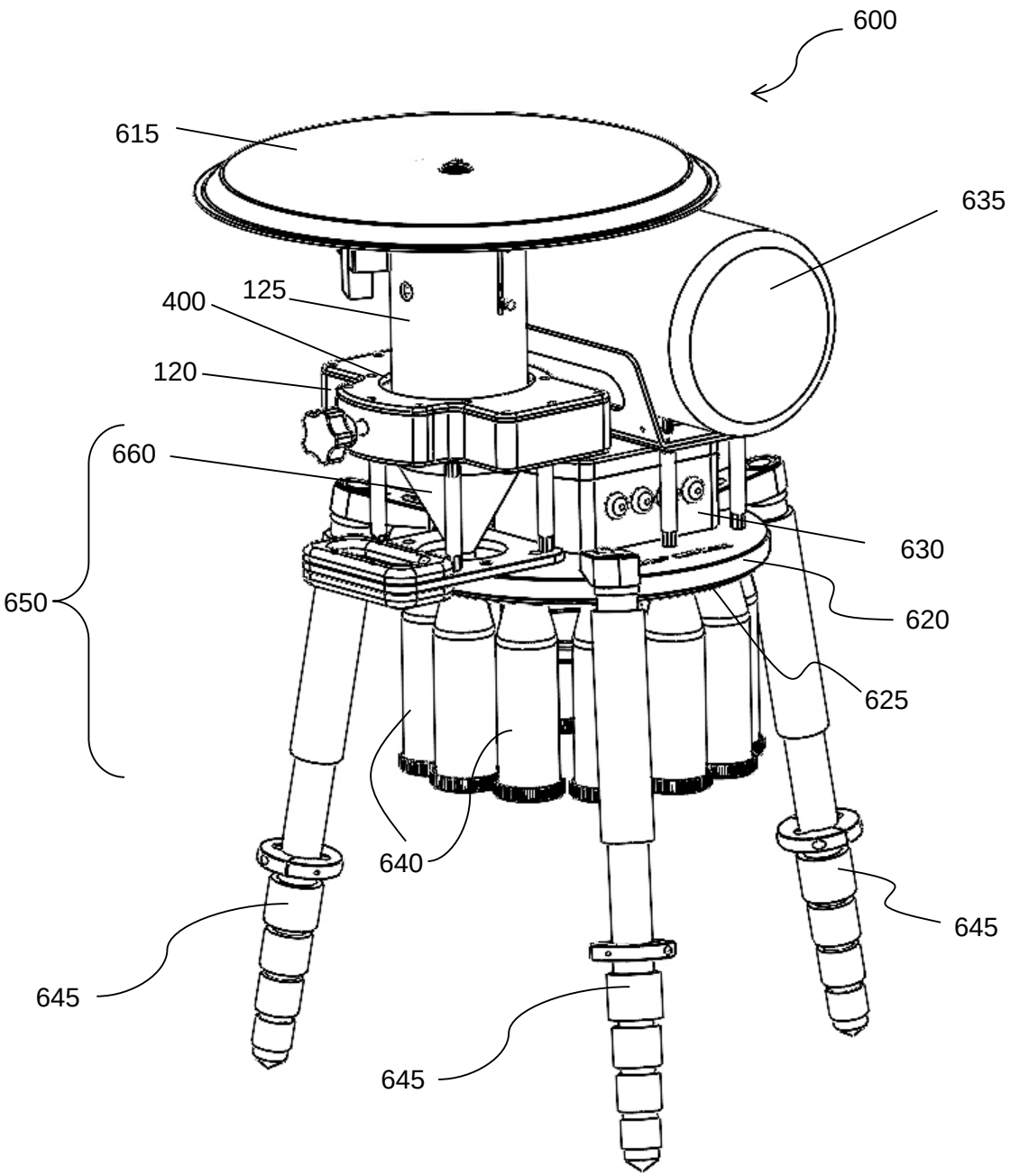

FIG. 13

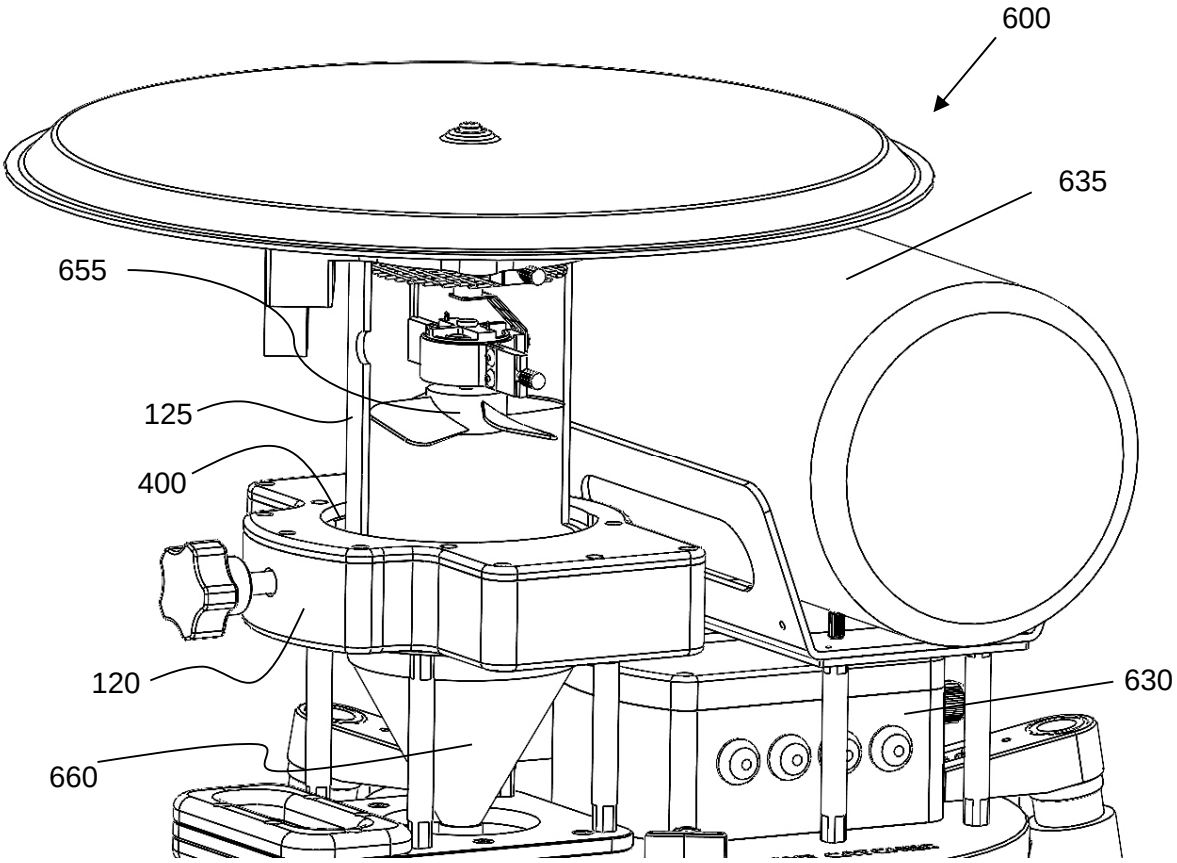

FIG. 14

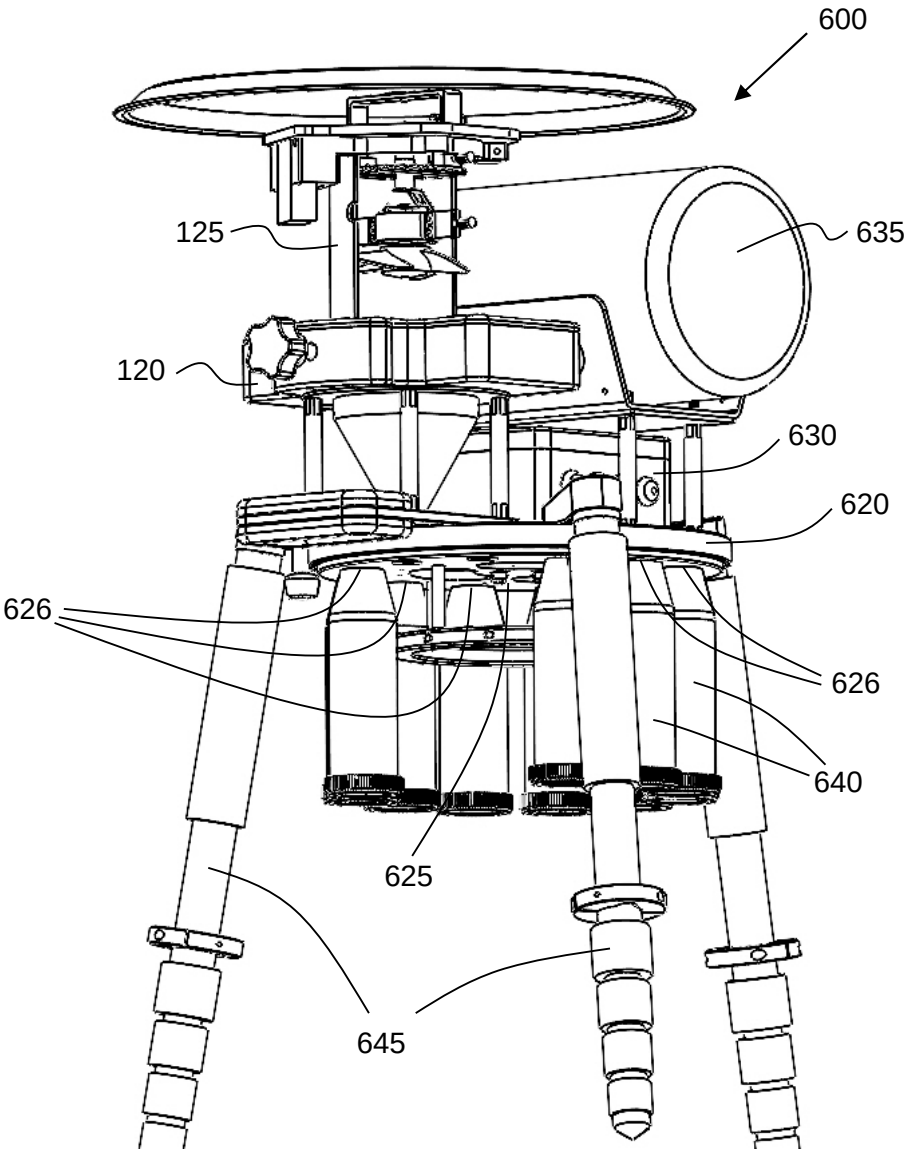

FIG. 15

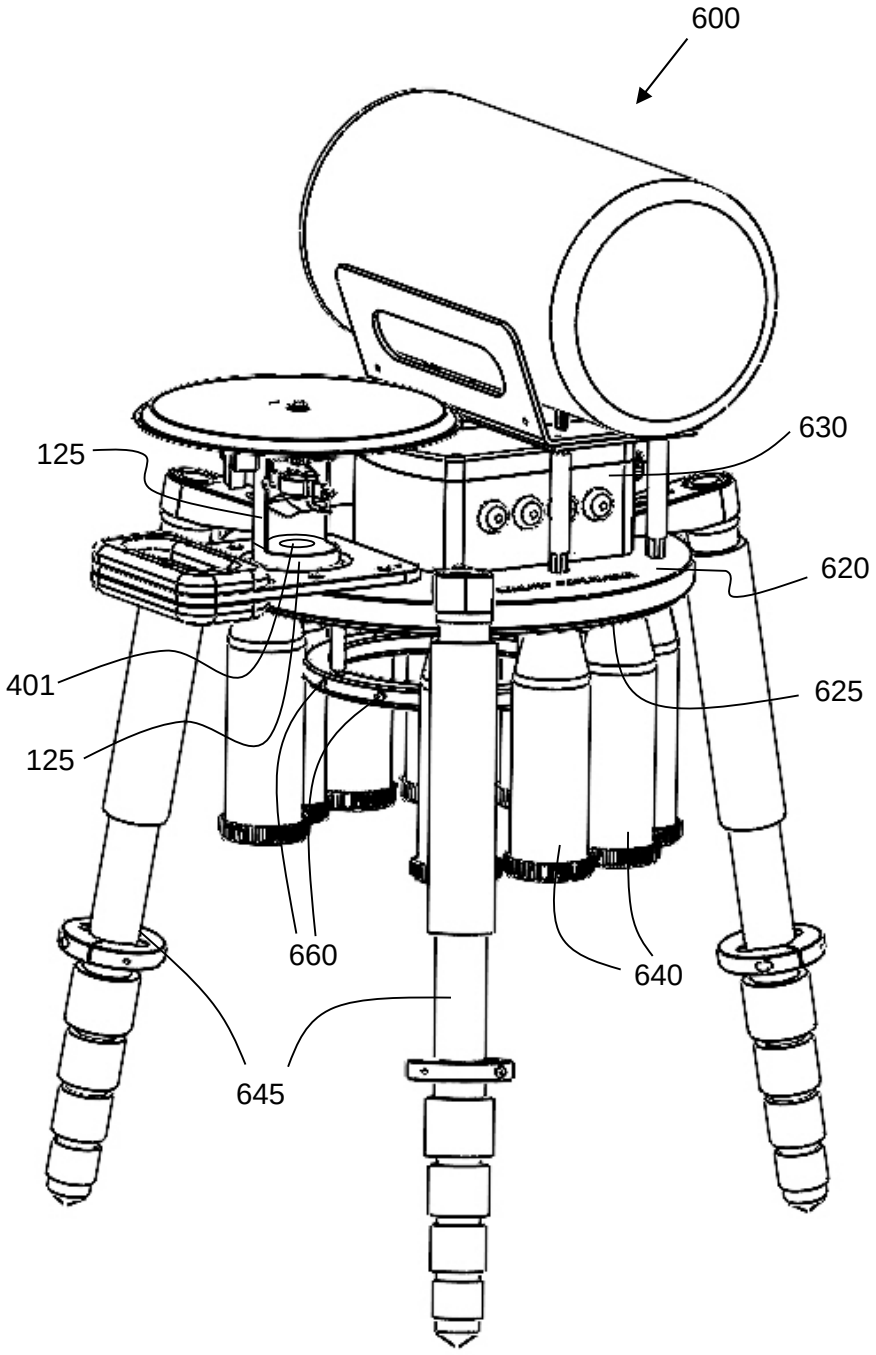

FIG. 16

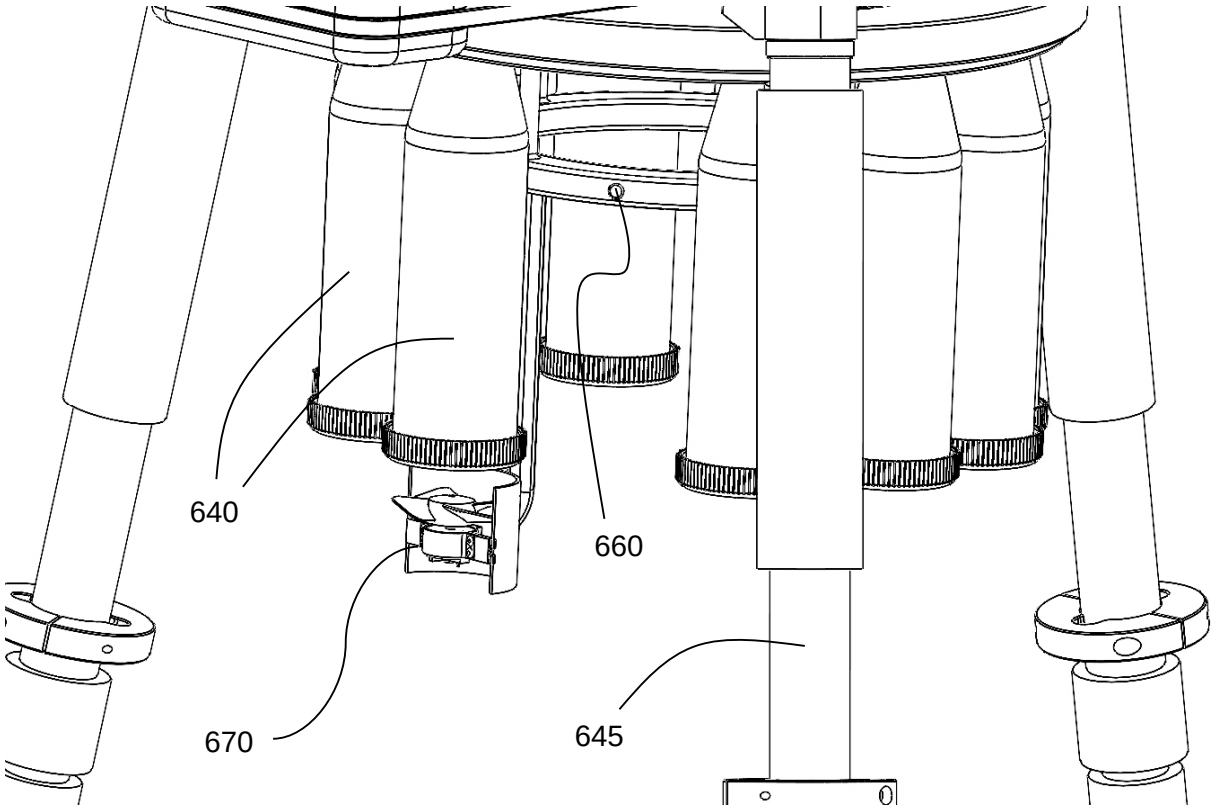

FIG. 17