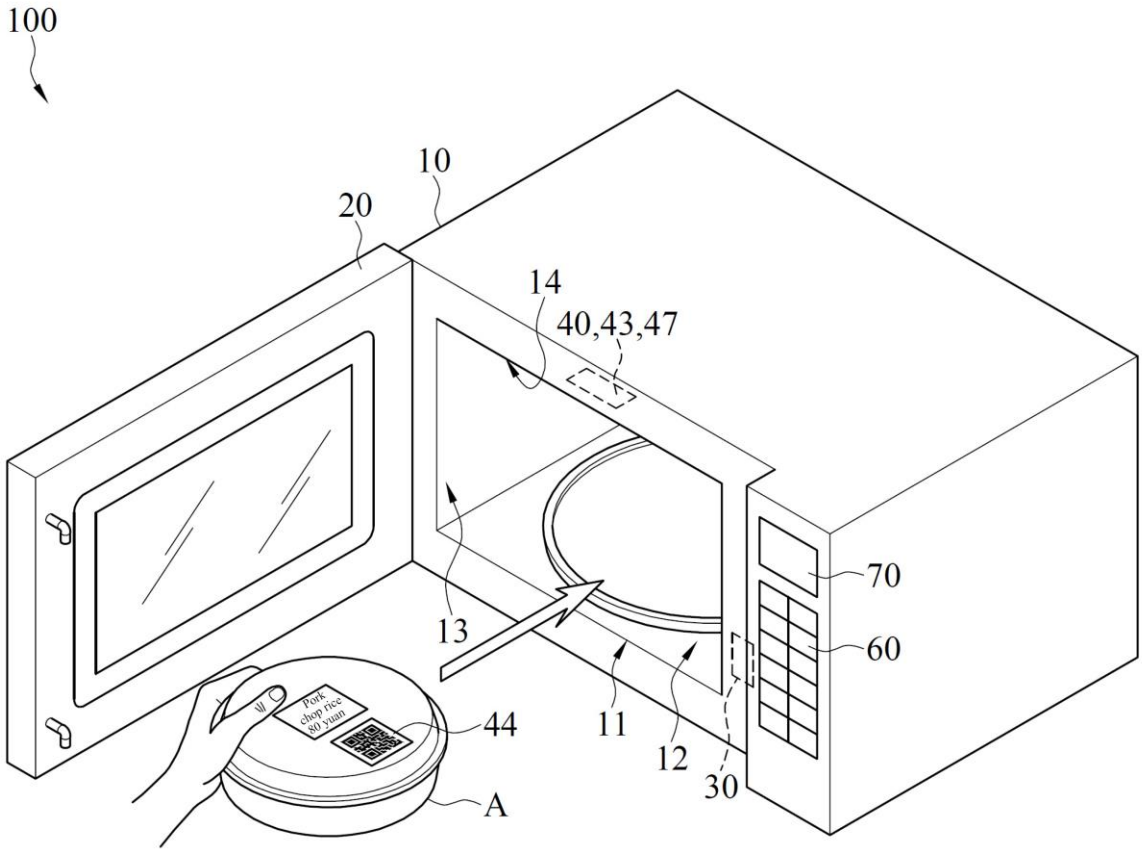

FIG. 1

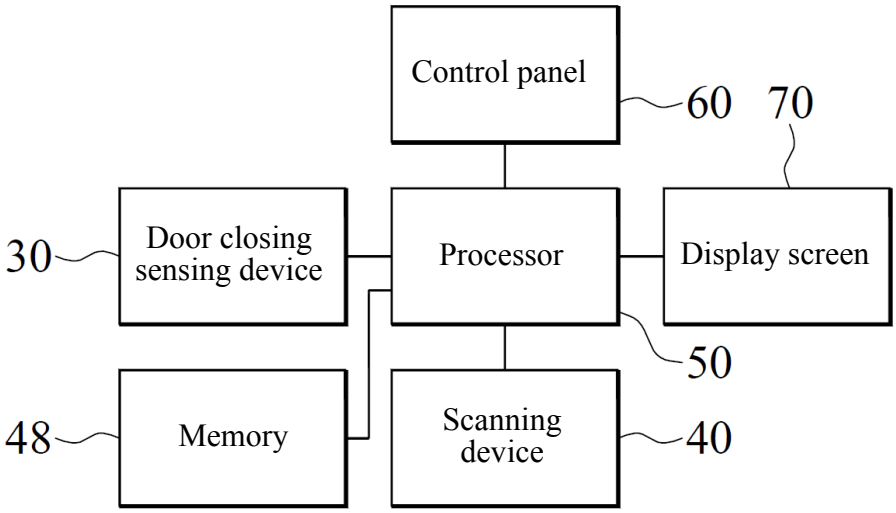
Control panel
60
70
30
Door closing sensing device
Processor
Display screen
50
48
Memory
Scanning device
40

FIG. 2

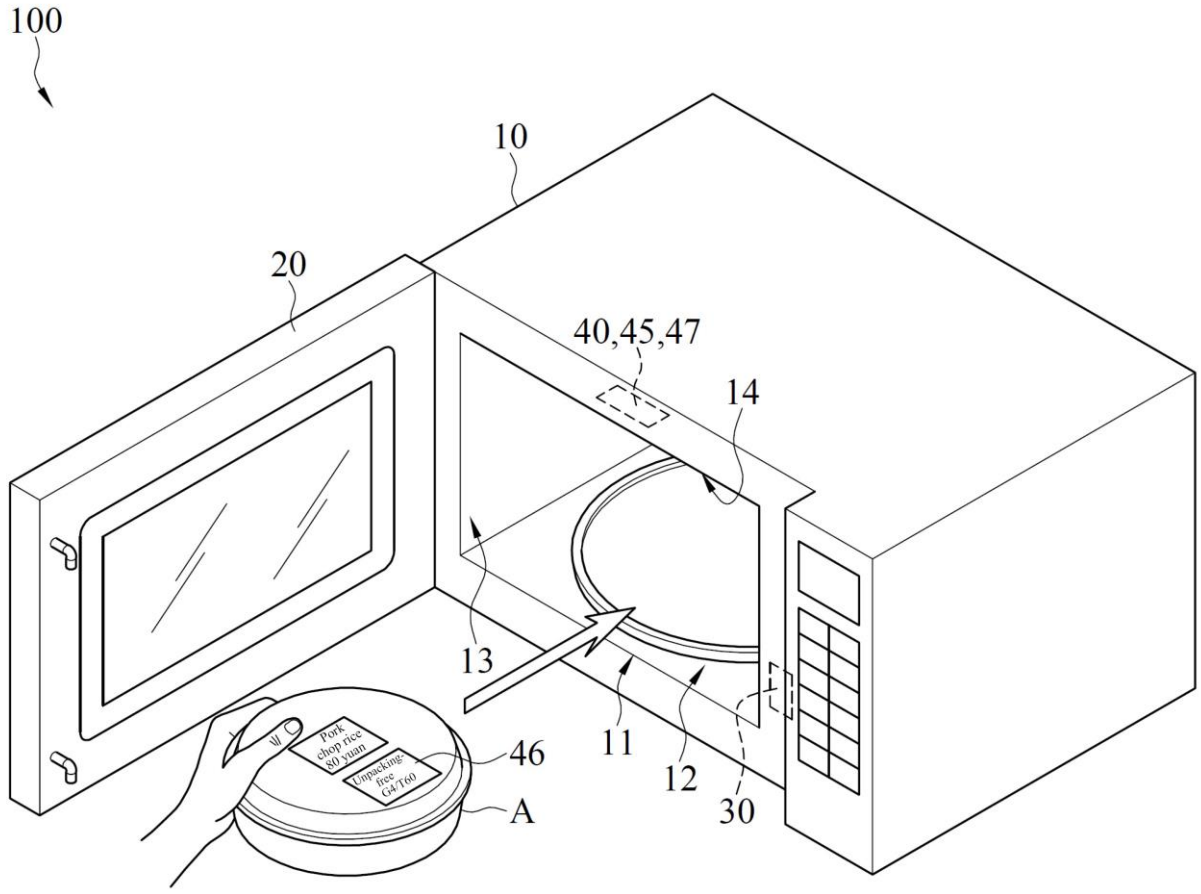
100
10
20
40,45,47
14
13
11
12
30
46
A
Pork
chop rice
80 yuan
Unpacking-
free
G4/T60

FIG. 3