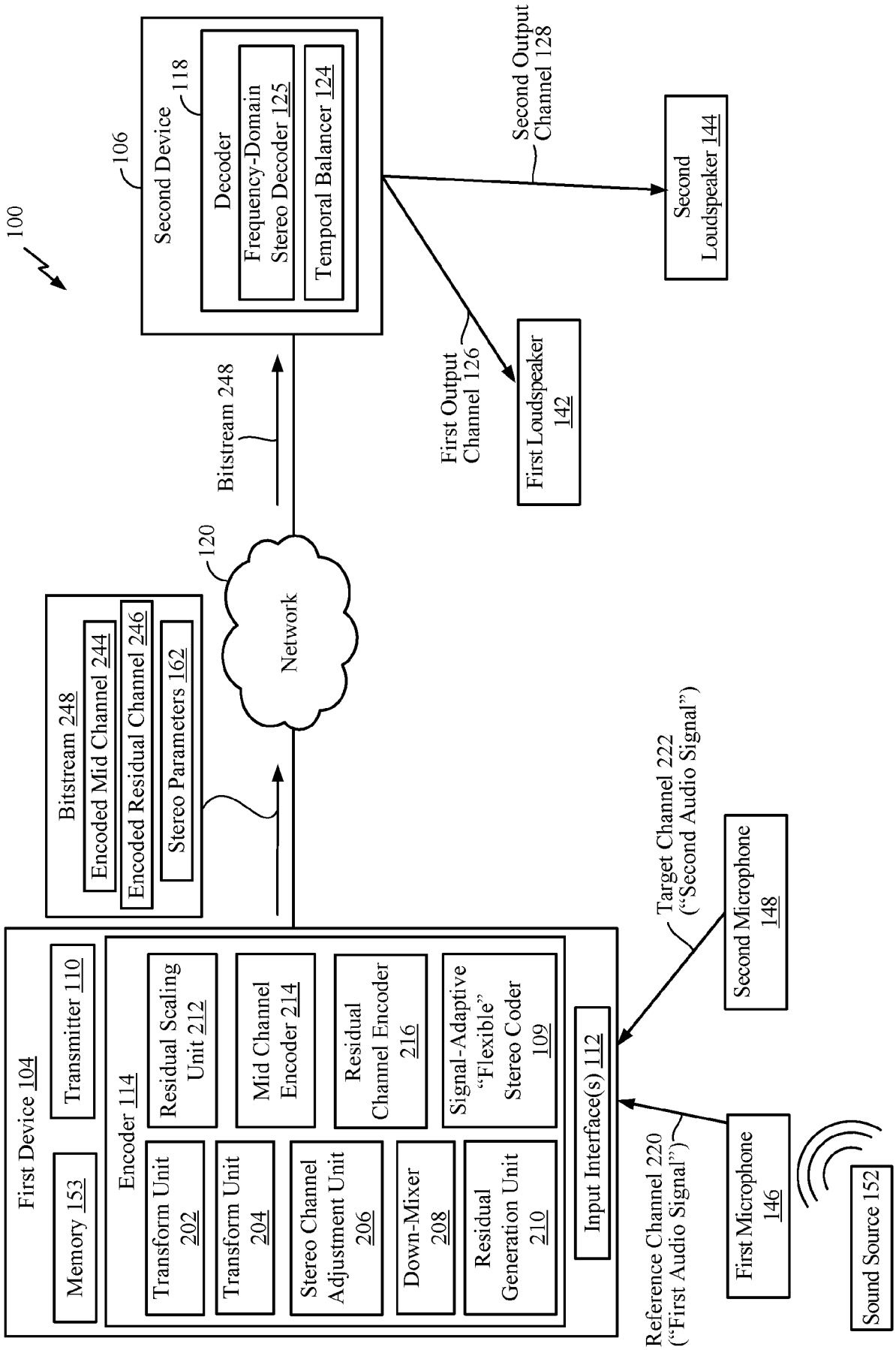
100
First Device 104
Memory 153
Transmitter 110
Encoder 114
Transform Unit 202
Transform Unit 204
Stereo Channel Adjustment Unit 206
Down-Mixer 208
Residual Generation Unit 210
Residual Scaling Unit 212
Mid Channel Encoder 214
Residual Channel Encoder 216
Signal-Adaptive "Flexible" Stereo Coder 109
Input Interface(s) 112
Bitstream 248
Encoded Mid Channel 244
Encoded Residual Channel 246
Stereo Parameters 162
120
Network
Bitstream 248
106
Second Device
118
Decoder
Frequency-Domain Stereo Decoder 125
Temporal Balancer 124
First Output Channel 126
First Loudspeaker 142
Second Output Channel 128
Second Loudspeaker 144
Target Channel 222 ("Second Audio Signal")
Second Microphone 148
Reference Channel 220 ("First Audio Signal")
First Microphone 146
Sound Source 152

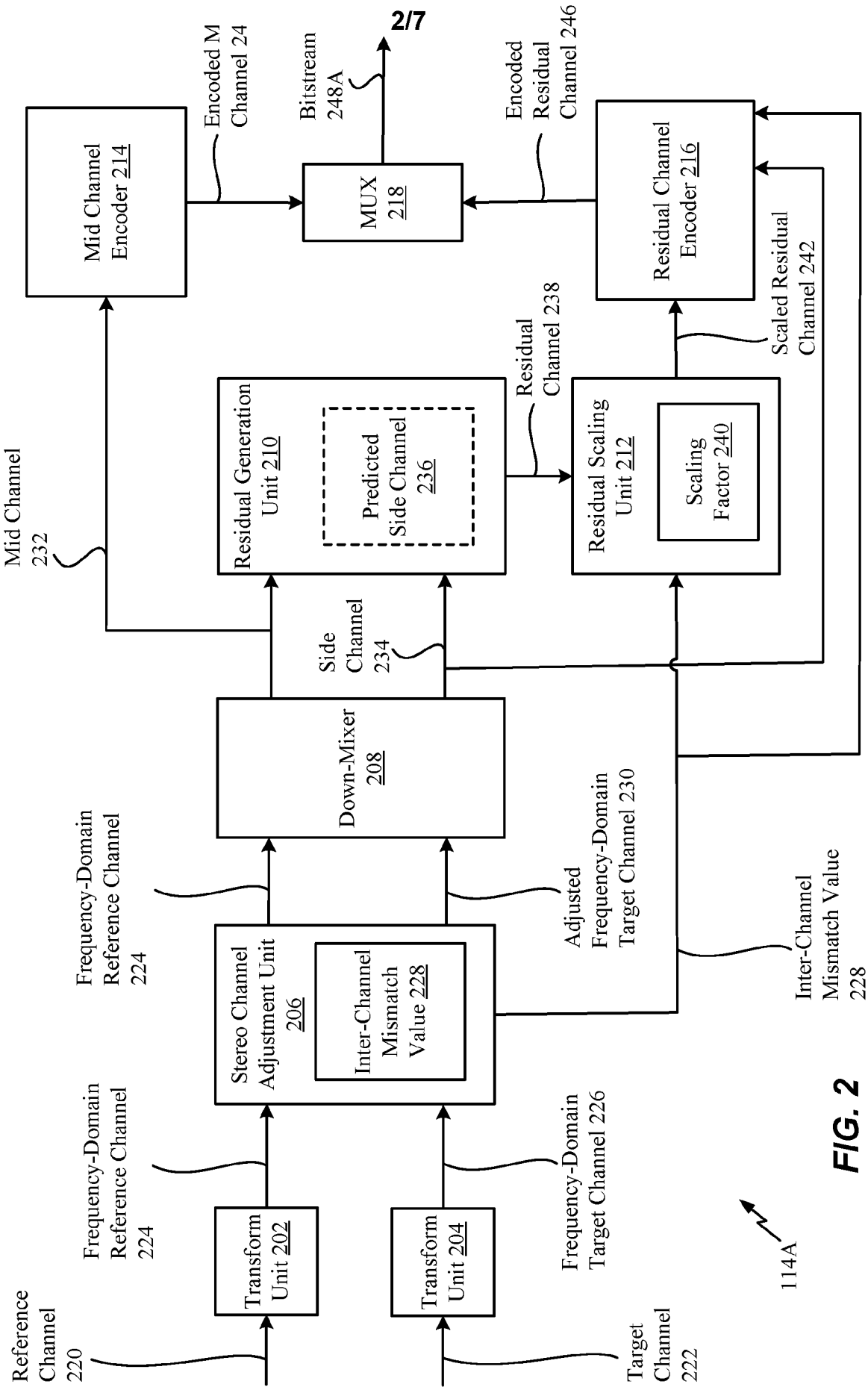
Reference Channel 220
Target Channel 222
Transform Unit 202
Transform Unit 204
Frequency-Domain Reference Channel 224
Frequency-Domain Target Channel 226
Stereo Channel Adjustment Unit 206
Inter-Channel Mismatch Value 228
Down-Mixer 208
Side Channel 234
Mid Channel 232
Residual Generation Unit 210
Predicted Side Channel 236
Residual Channel 238
Residual Scaling Unit 212
Scaling Factor 240
Scaled Residual Channel 242
Adjusted Frequency-Domain Target Channel 230
Inter-Channel Mismatch Value 228
Residual Channel Encoder 216
Encoded Residual Channel 246
MUX 218
Bitstream 248A
Mid Channel Encoder 214
Encoded M Channel 24
114A

FIG. 2

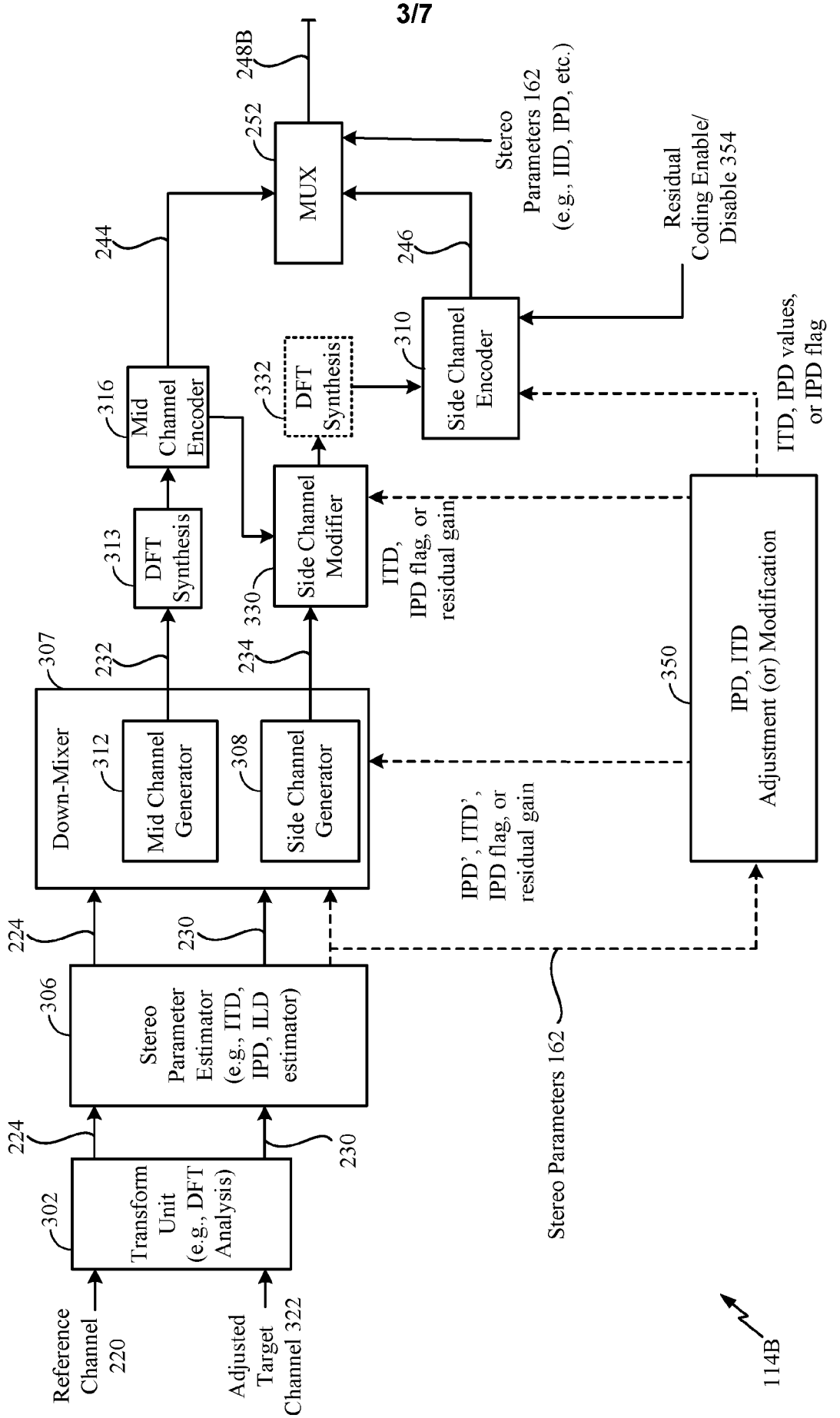
Reference Channel 220
Adjusted Target Channel 322
302
Transform Unit (e.g., DFT Analysis)
224
230
306
Stereo Parameter Estimator (e.g., ITD, IPD, ILD estimator)
224
230
307
Down-Mixer
312
Mid Channel Generator
308
Side Channel Generator
232
234
313
DFT Synthesis
316
Mid Channel Encoder
330
Side Channel Modifier
332
DFT Synthesis
310
Side Channel Encoder
244
246
252
MUX
248B
Stereo Parameters 162 (e.g., IID, IPD, etc.)
Residual Coding Enable/ Disable 354
ITD, IPD flag, or residual gain
IPD', ITD', IPD flag, or residual gain
350
IPD, ITD Adjustment (or) Modification
ITD, IPD values, or IPD flag
Stereo Parameters 162
114B

FIG. 3

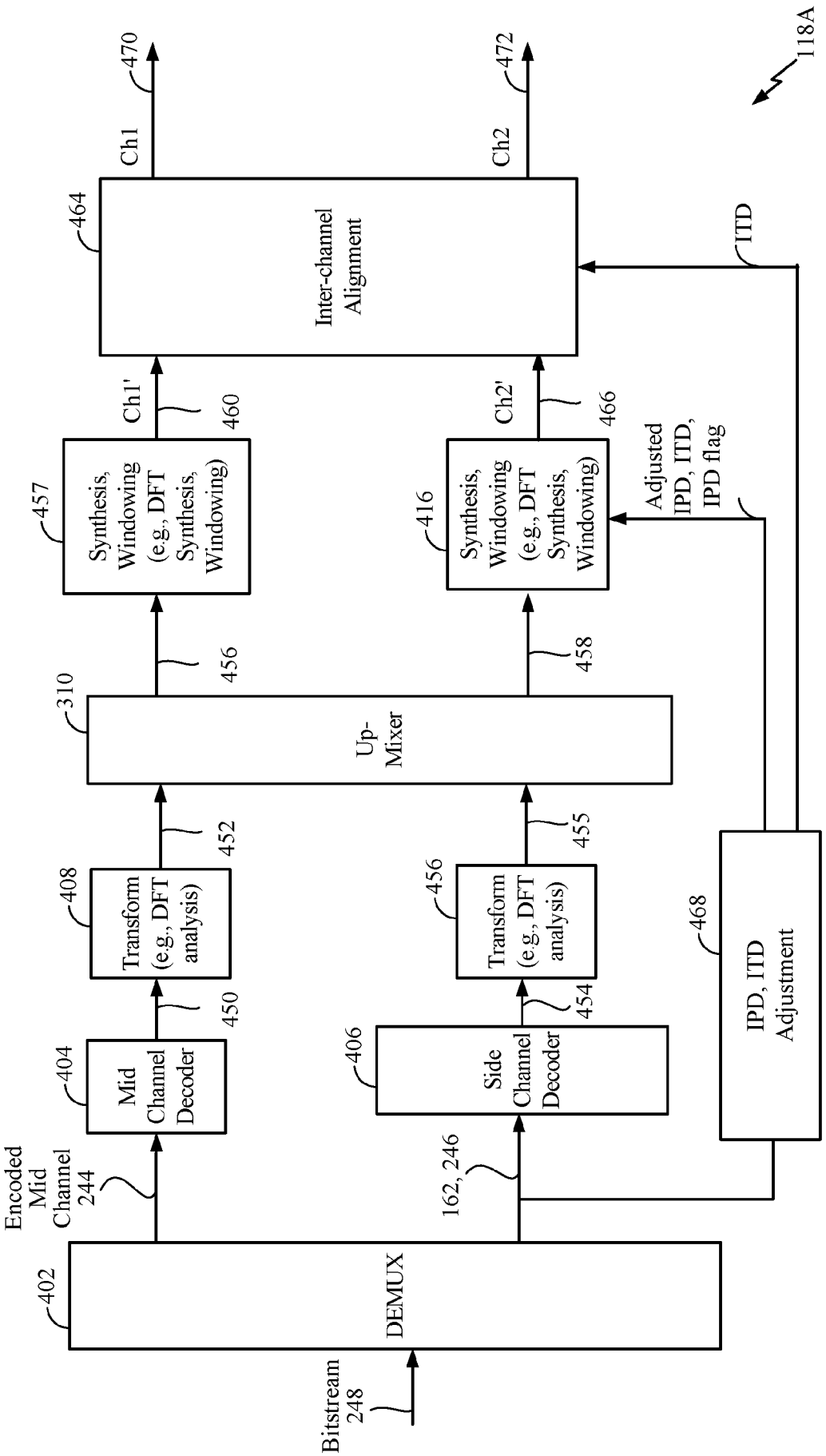
118A
Bitstream 248
DEMUX
402
Encoded Mid Channel 244
162, 246
Mid Channel Decoder
404
Side Channel Decoder
406
Transform (e.g., DFT analysis)
408
Transform (e.g., DFT analysis)
456
450
454
452
455
Up-Mixer
310
456
458
Synthesis, Windowing (e.g., DFT Synthesis, Windowing)
457
Synthesis, Windowing (e.g., DFT Synthesis, Windowing)
416
Ch1'
460
Ch2'
466
Adjusted IPD, ITD, IPD flag
IPD, ITD Adjustment
468
ITD
Inter-channel Alignment
464
Ch1
470
Ch2
472

FIG. 4

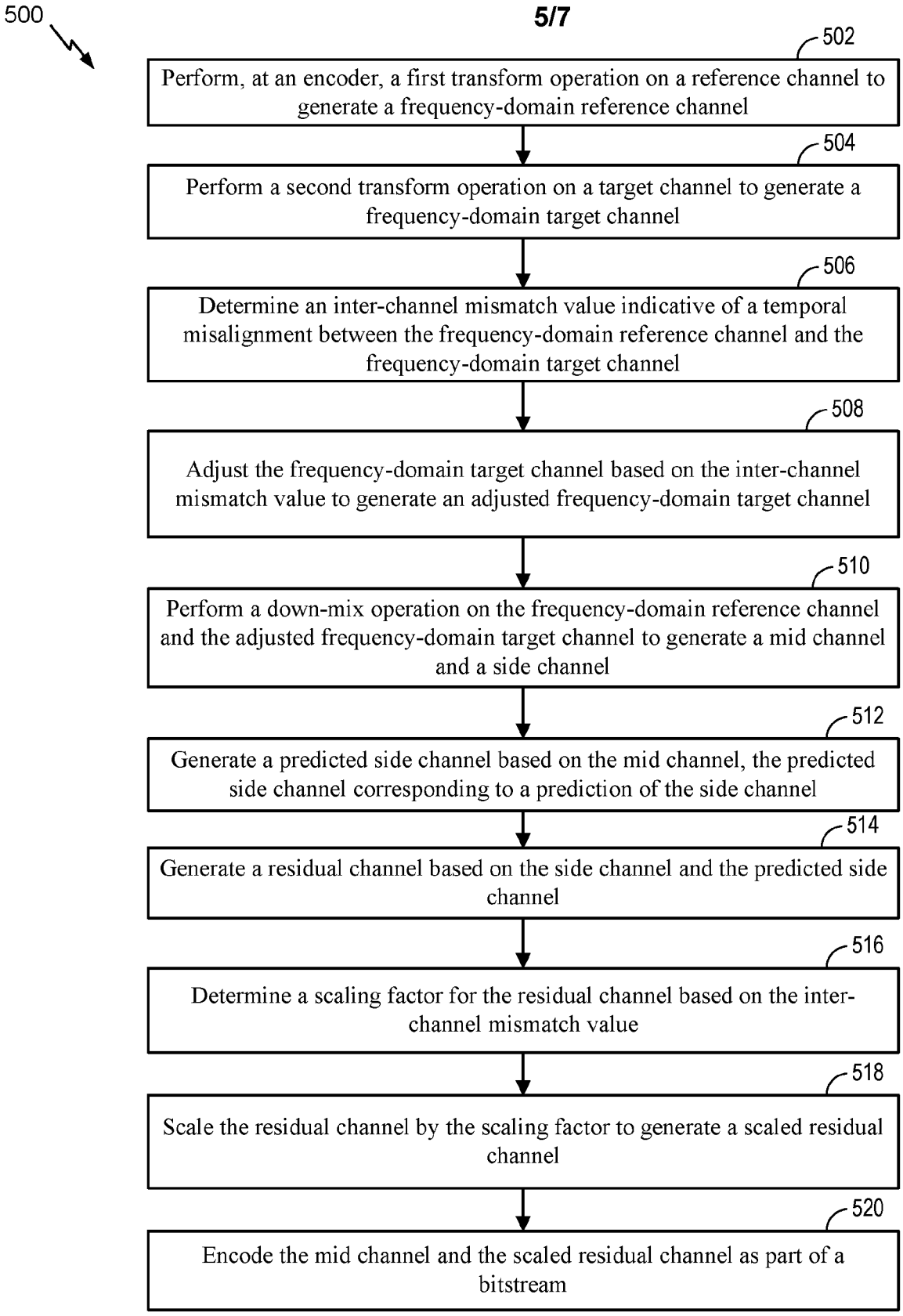
500
502
Perform, at an encoder, a first transform operation on a reference channel to generate a frequency-domain reference channel
504
Perform a second transform operation on a target channel to generate a frequency-domain target channel
506
Determine an inter-channel mismatch value indicative of a temporal misalignment between the frequency-domain reference channel and the frequency-domain target channel
508
Adjust the frequency-domain target channel based on the inter-channel mismatch value to generate an adjusted frequency-domain target channel
510
Perform a down-mix operation on the frequency-domain reference channel and the adjusted frequency-domain target channel to generate a mid channel and a side channel
512
Generate a predicted side channel based on the mid channel, the predicted side channel corresponding to a prediction of the side channel
514
Generate a residual channel based on the side channel and the predicted side channel
516
Determine a scaling factor for the residual channel based on the inter-channel mismatch value
518
Scale the residual channel by the scaling factor to generate a scaled residual channel
520
Encode the mid channel and the scaled residual channel as part of a bitstream

FIG. 5

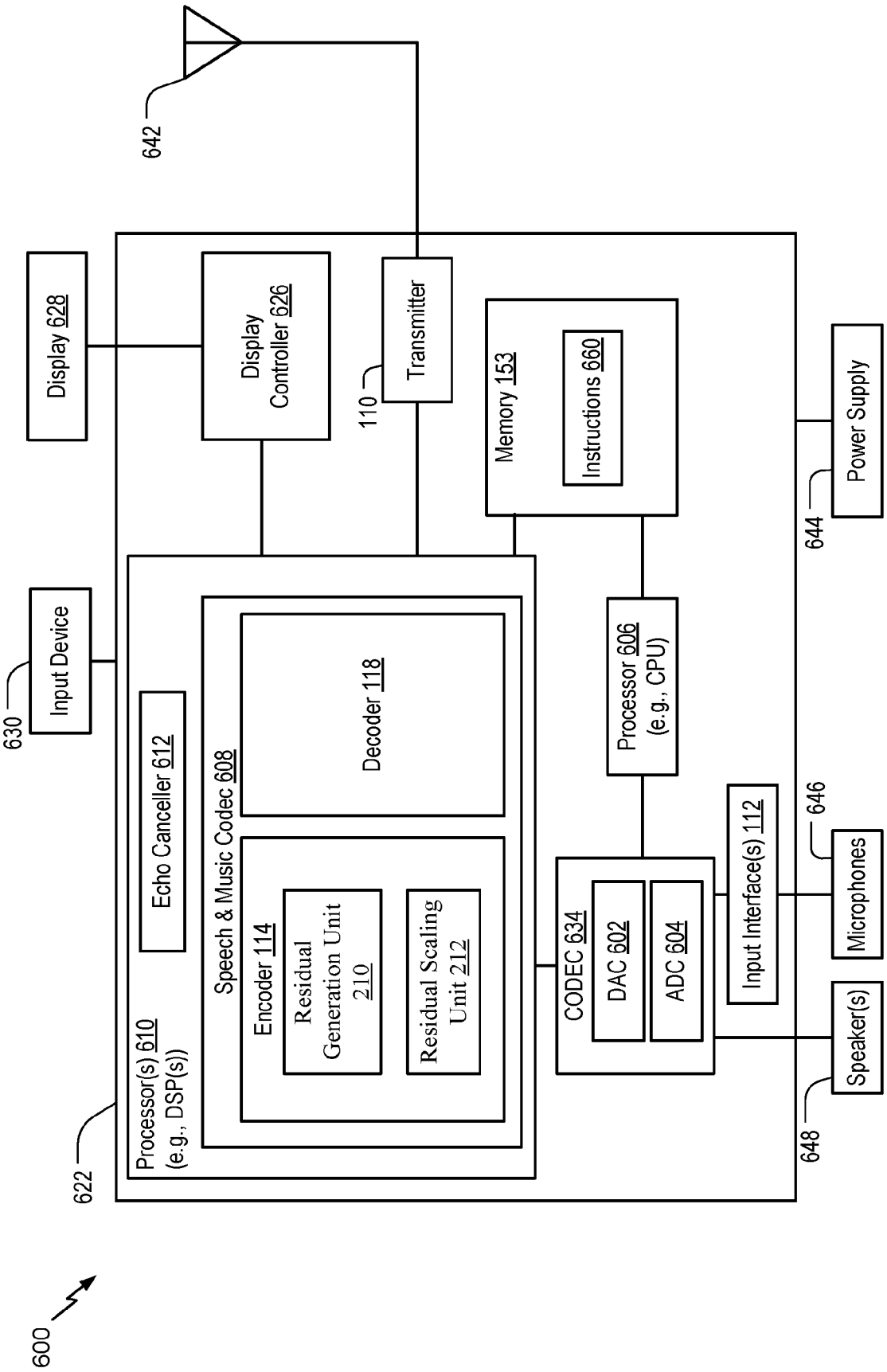
600
622
Processor(s) 610
(e.g., DSP(s))
Echo Canceller 612
Speech & Music Codec 608
Encoder 114
Residual Generation Unit 210
Residual Scaling Unit 212
Decoder 118
630
Input Device
Display 628
Display Controller 626
110
Transmitter
642
Memory 153
Instructions 660
Processor 606
(e.g., CPU)
CODEC 634
DAC 602
ADC 604
Input Interface(s) 112
646
Microphones
Speaker(s)
648
644
Power Supply

FIG. 6

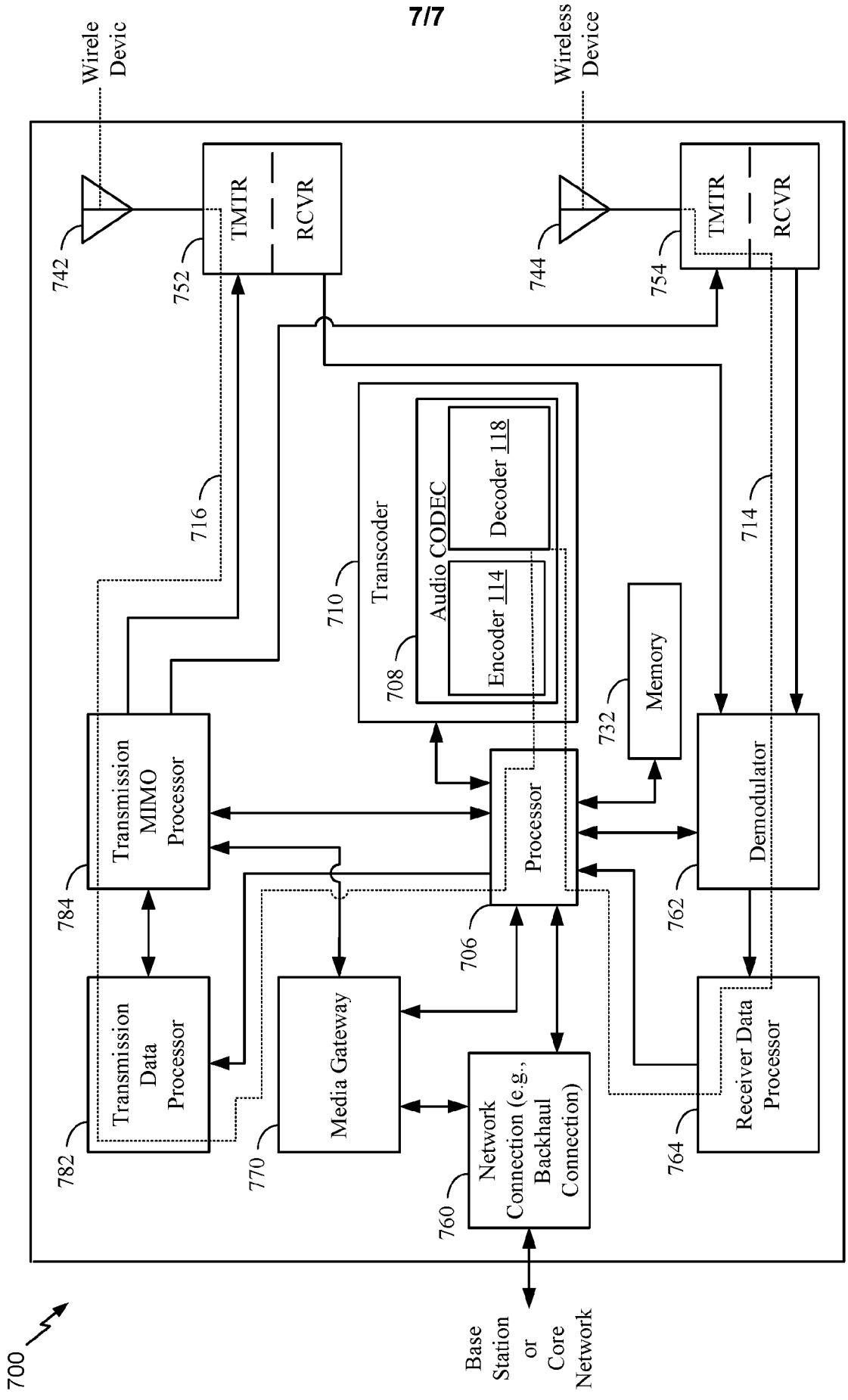
700
Base Station or Core Network
Wirele Devic
Wireless Device
742
744
752
754
TMTR
RCVR
716
714
710
Transcoder
708
Audio CODEC
Encoder 114
Decoder 118
732
Memory
784
Transmission MIMO Processor
706
Processor
762
Demodulator
782
Transmission Data Processor
770
Media Gateway
760
Network Connection (e.g., Backhaul Connection)
764
Receiver Data Processor

FIG. 7