Fig.1

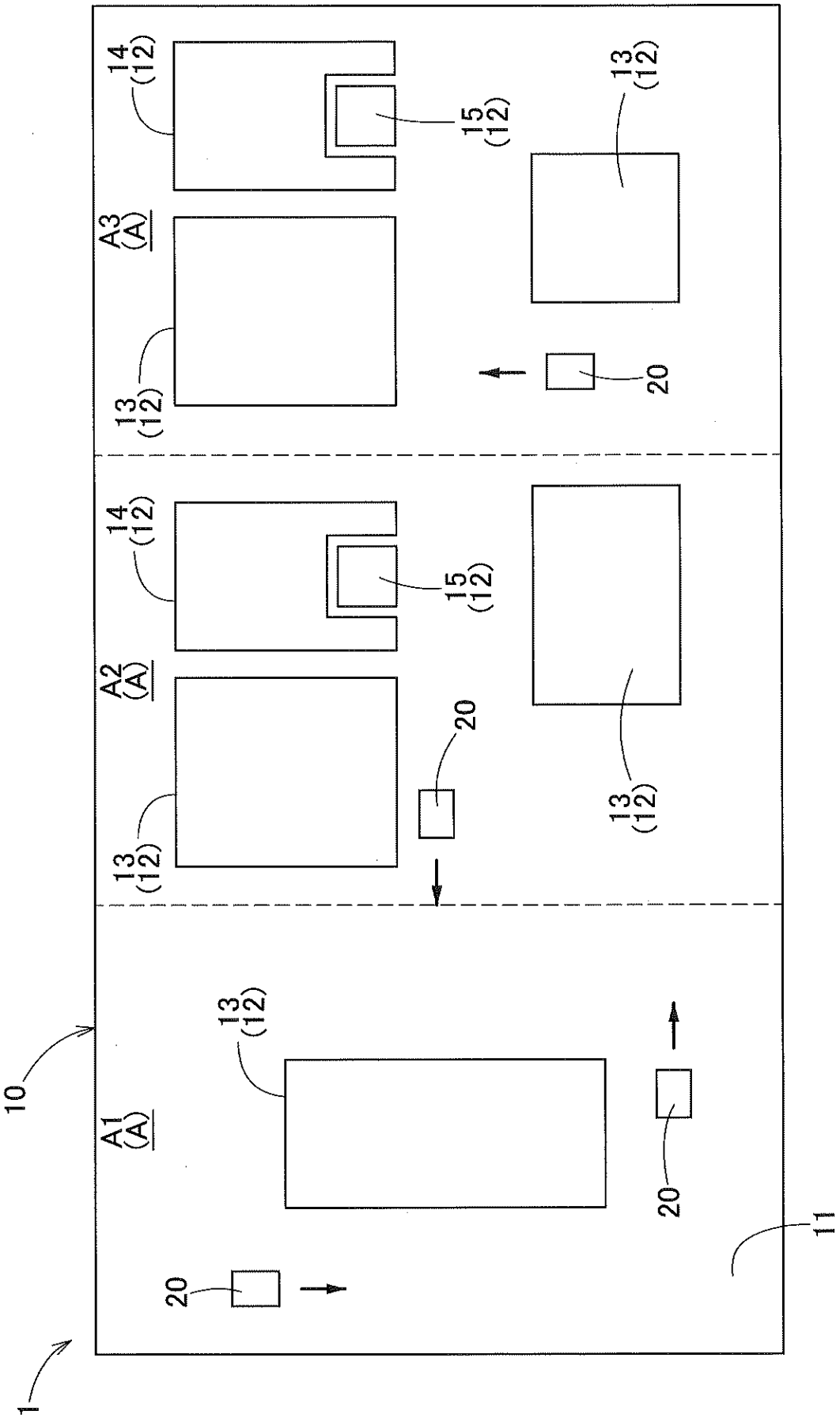

Fig.2

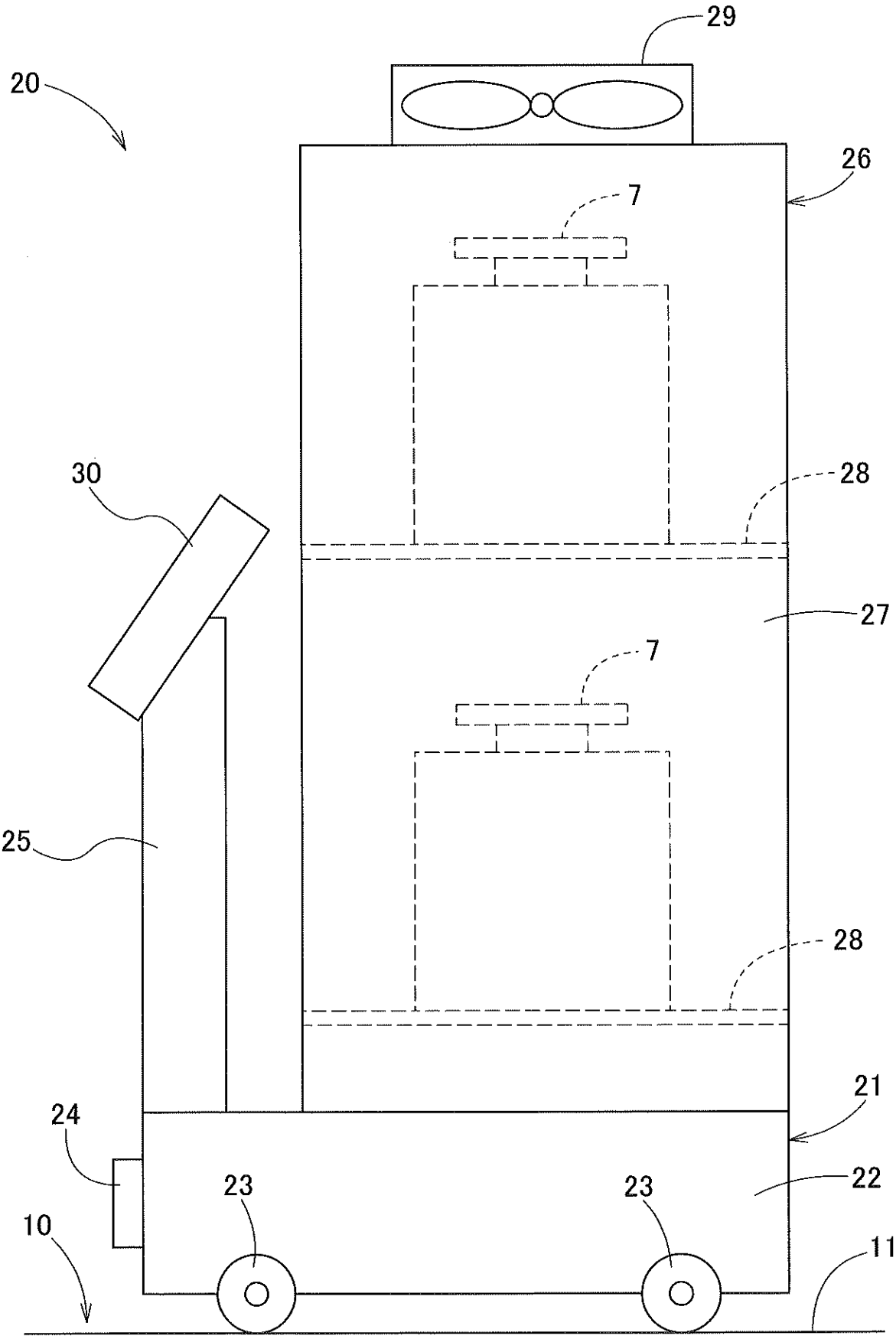

Fig.3

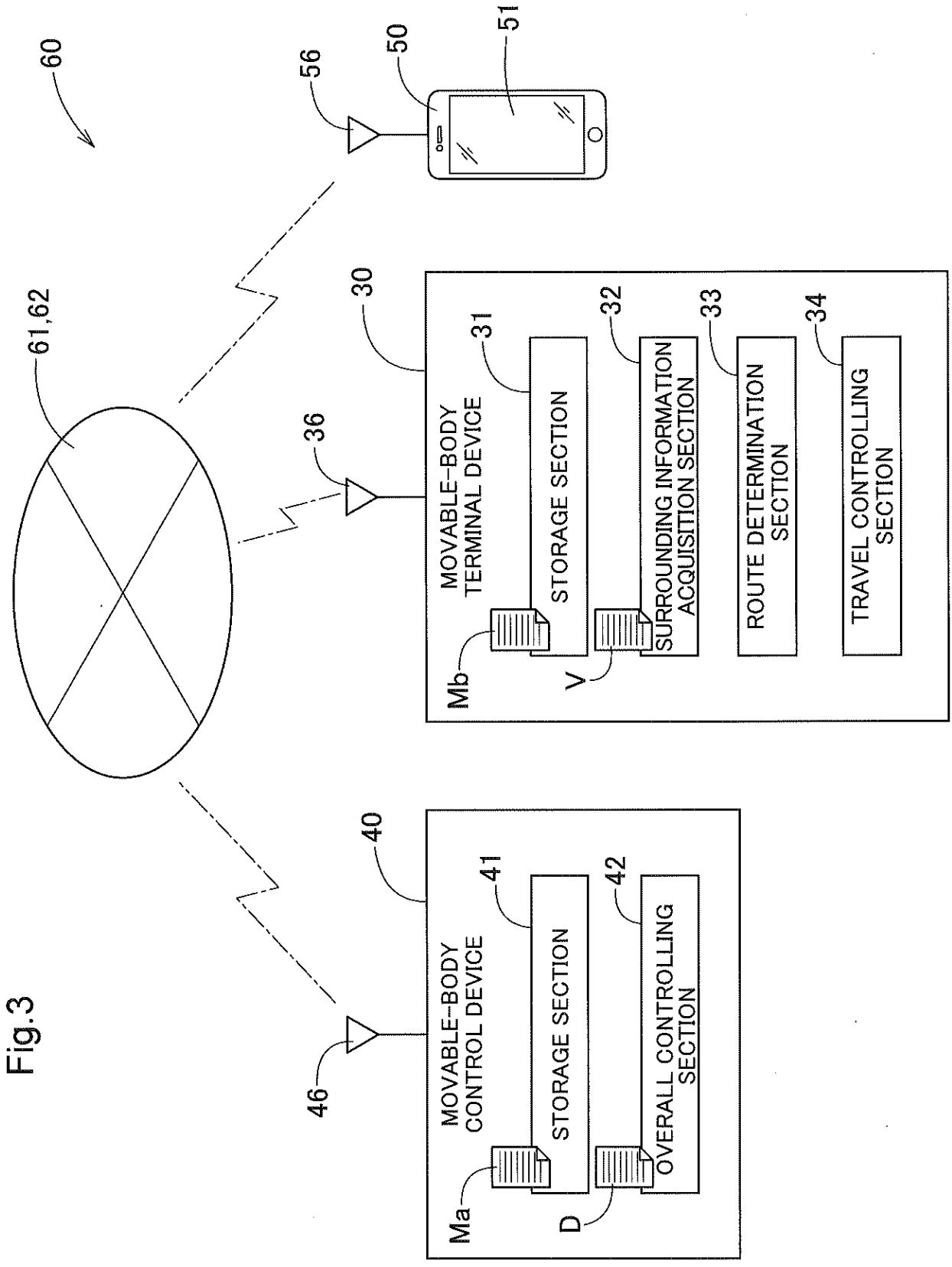
60
56
50
51
61,62
30
36
MOVABLE-BODY TERMINAL DEVICE
31
STORAGE SECTION
Mb
32
SURROUNDING INFORMATION ACQUISITION SECTION
V
33
ROUTE DETERMINATION SECTION
34
TRAVEL CONTROLLING SECTION
40
46
MOVABLE-BODY CONTROL DEVICE
41
STORAGE SECTION
Ma
42
OVERALL CONTROLLING SECTION
D

Fig.4

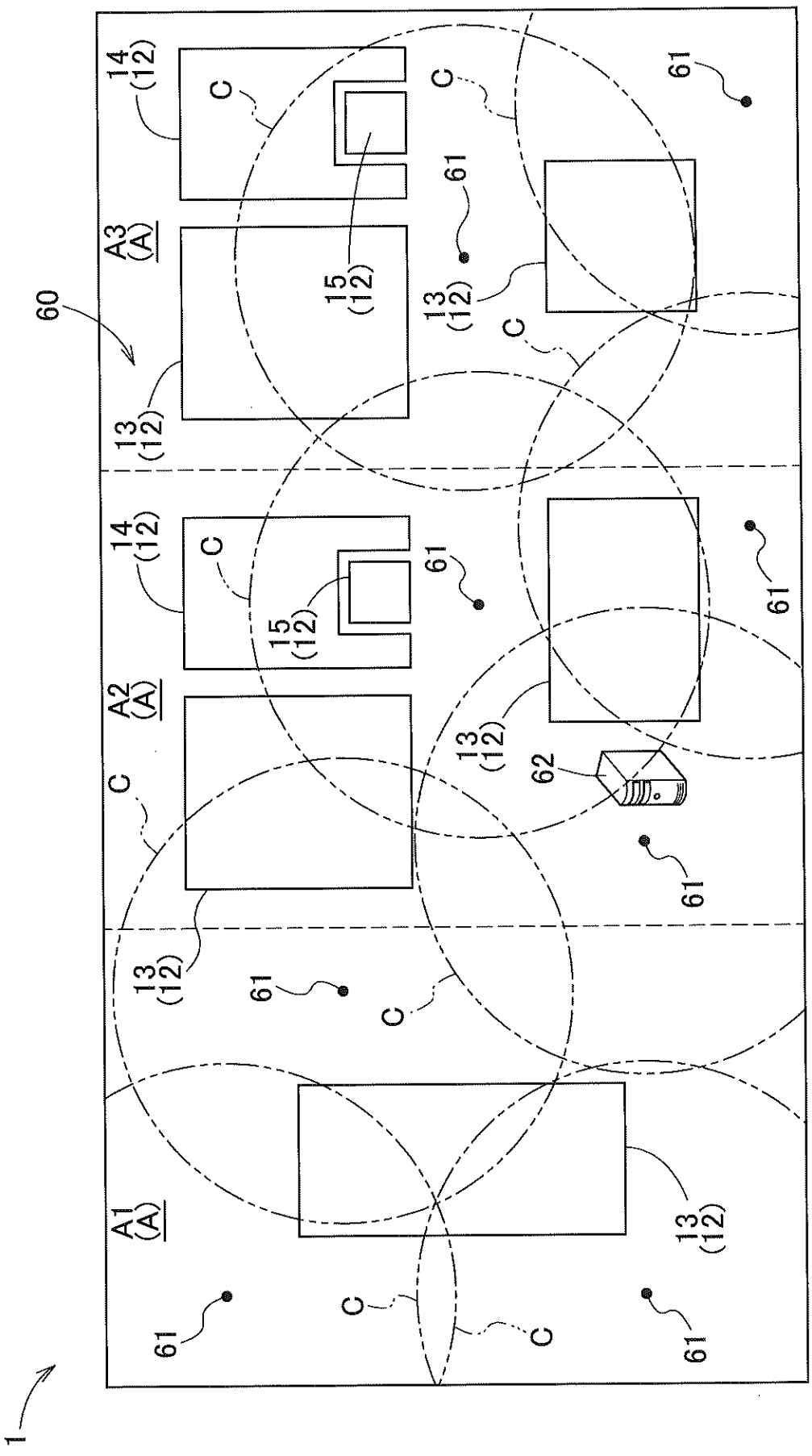

Fig.5

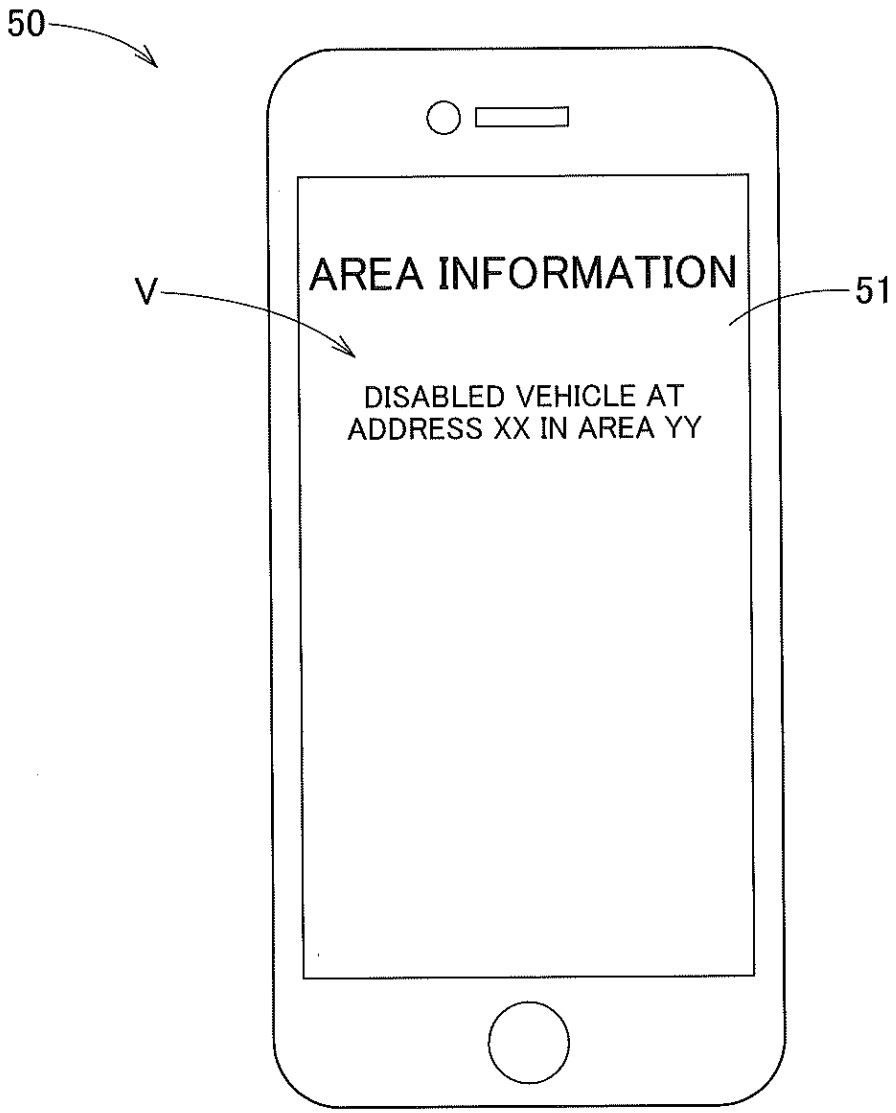
50
AREA INFORMATION
V
51
DISABLED VEHICLE AT
ADDRESS XX IN AREA YY

Fig.6

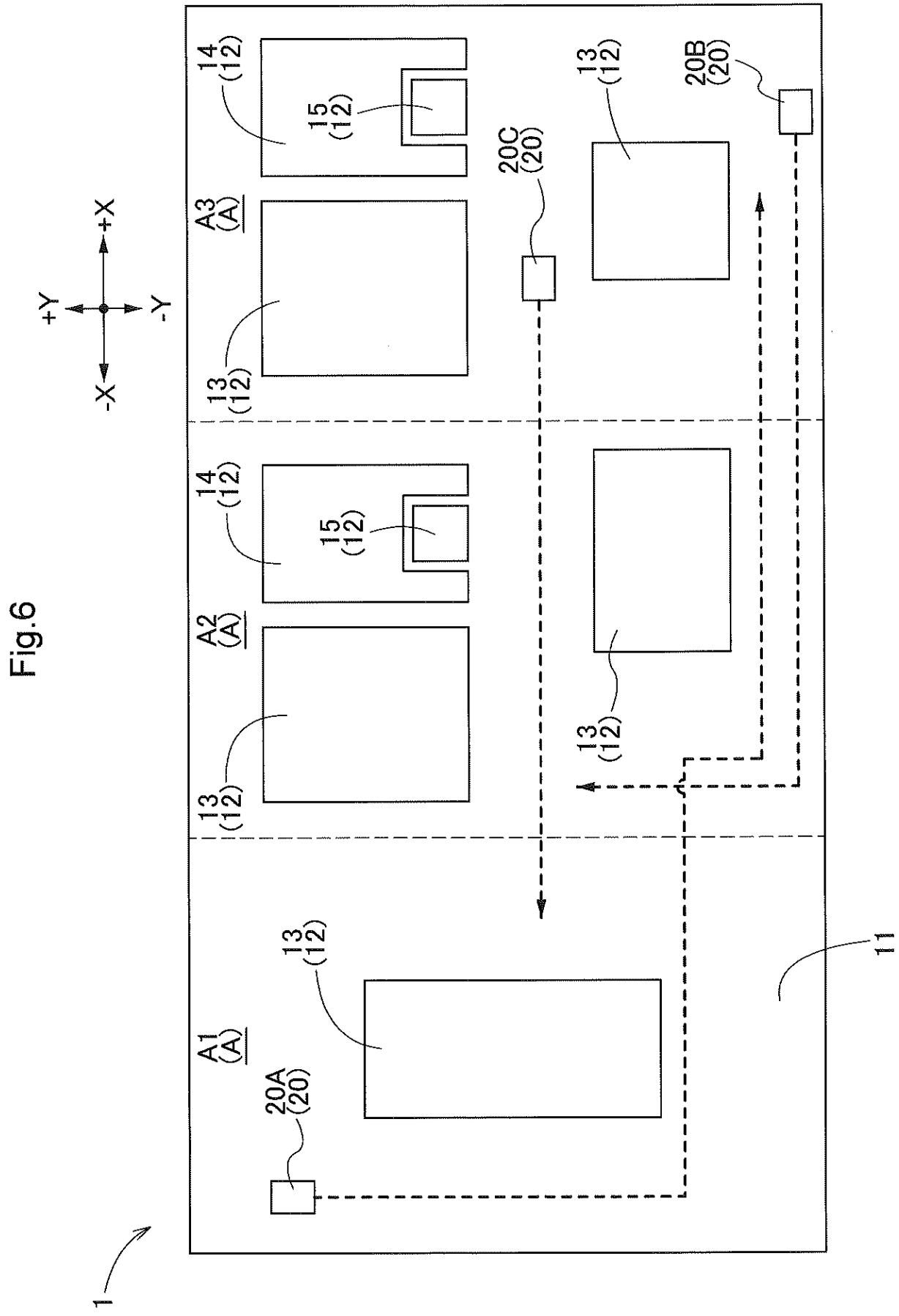

Fig.7

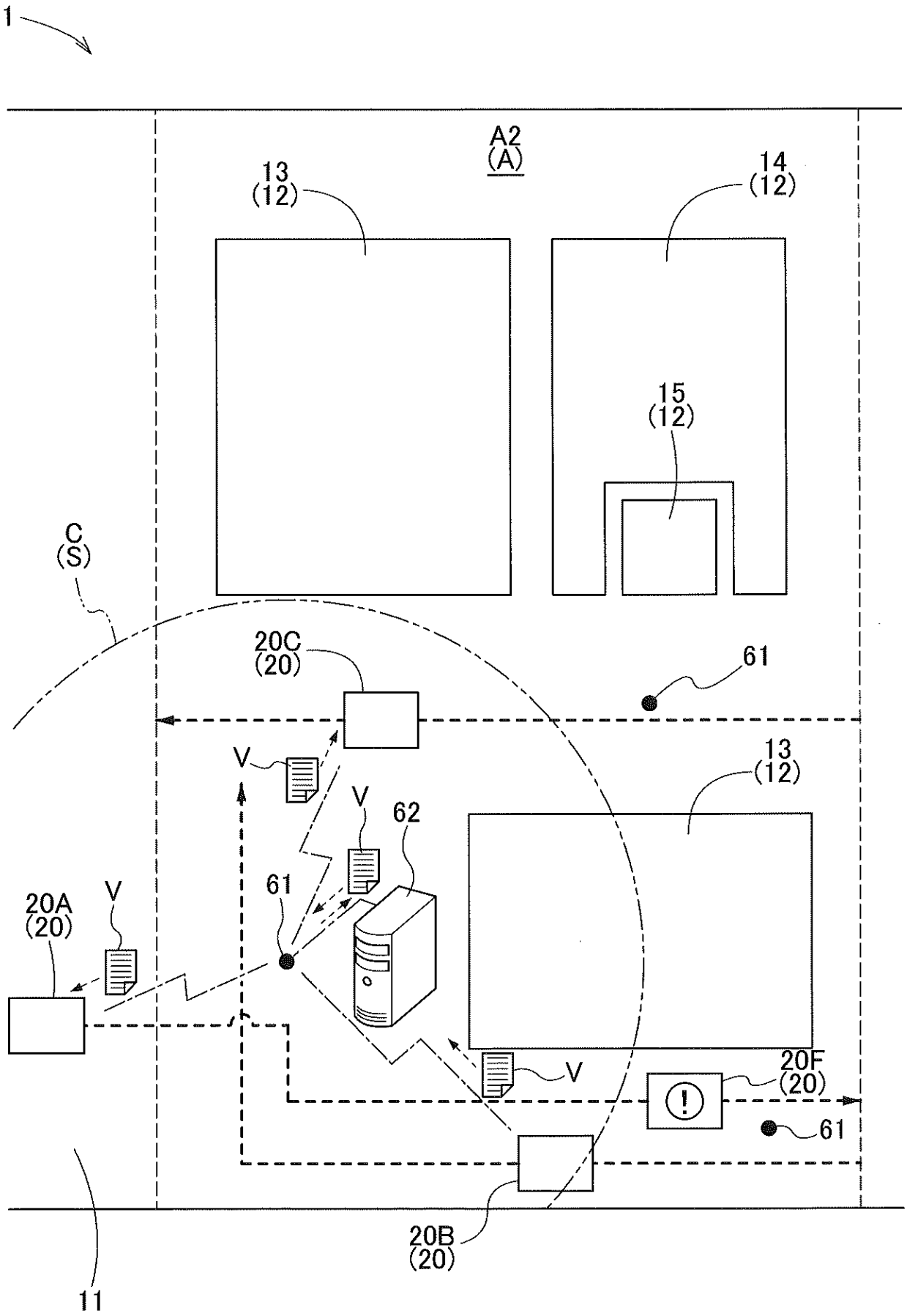
1
A2
(A)
13
(12)
14
(12)
15
(12)
C
(S)
20C
(20)
61
V
V
62
13
(12)
61
20A
(20)
V
V
20F
(20)
61
20B
(20)
11

Fig.8

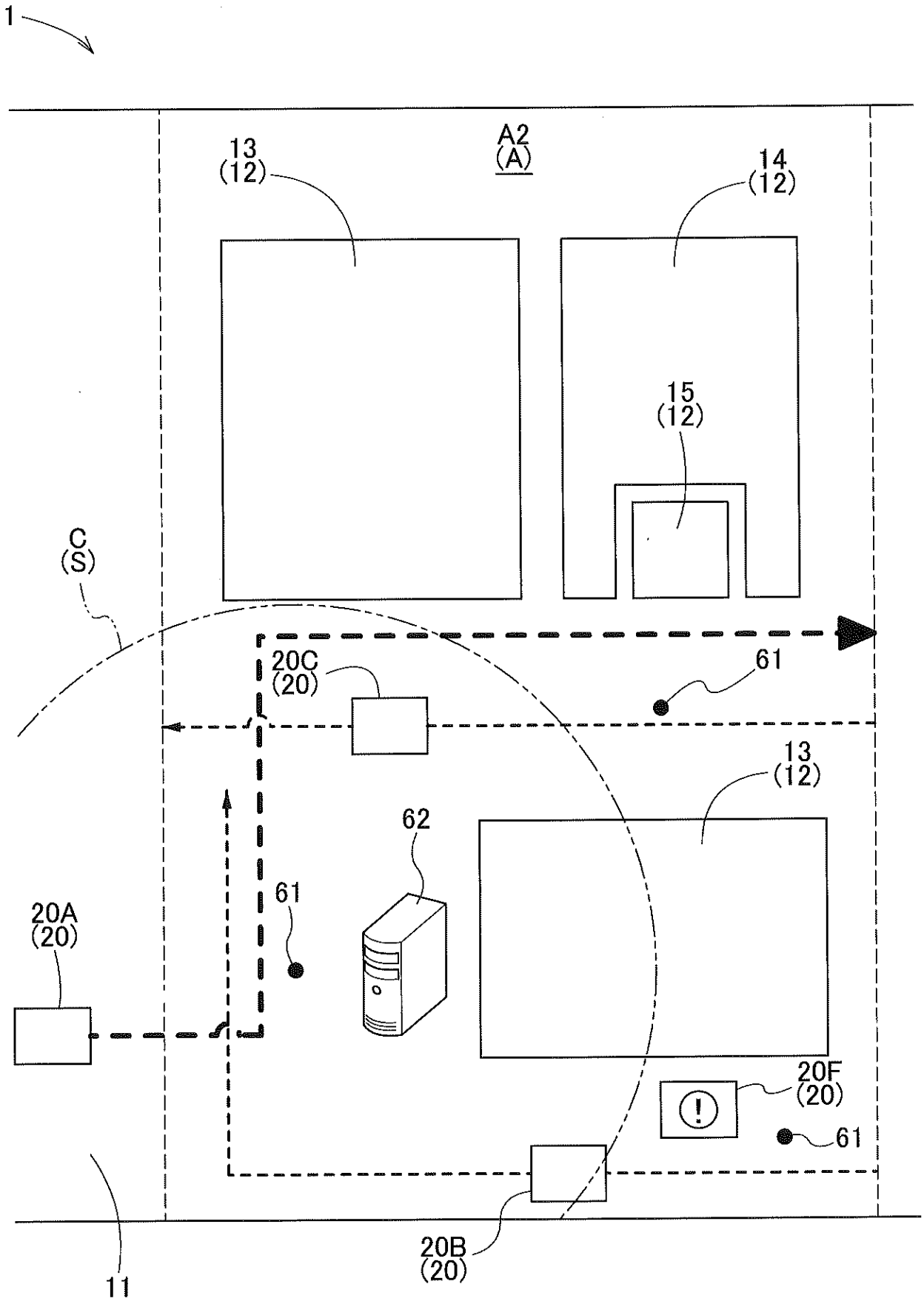
1
A2
(A)
13
(12)
14
(12)
15
(12)
C
(S)
20C
(20)
61
13
(12)
62
61
20A
(20)
20F
(20)
61
20B
(20)
11