(12) INTERNATIONAL APPLICATION PUBLISHED UNDER THE PATENT COOPERATION TREATY (PCT)

(19) World Intellectual Property Organization
International Bureau

(43) International Publication Date
01 February 2024 (01.02.2024)

WIPO | PCT

(10) International Publication Number
WO 2024/025457 A1

(51) International Patent Classification:
B65D 5/00 (2006.01) *B65D 5/48* (2006.01)
B65D 5/46 (2006.01) *B65D 5/50* (2006.01)

(21) International Application Number:
PCT/SG2022/050674

(22) International Filing Date:
20 September 2022 (20.09.2022)

(25) Filing Language: English

(26) Publication Language: English

(30) Priority Data:
10202250621F 28 July 2022 (28.07.2022) SG

(71) Applicant: **TRIA PTE. LTD.** [SG/SG]; 67 Ayer Rajah Crescent, #02-20, Singapore 139950 (SG).

(72) Inventors: **NG, Pei Kang**; 574 Hougang Street 51, #04-13, Singapore 530574 (SG). **LAW, Wei Kiat**; 683B Woodlands Drive 62, #06-116, Singapore 732683 (SG).

(81) Designated States *(unless otherwise indicated, for every kind of national protection available)*: AE, AG, AL, AM, AO, AT, AU, AZ, BA, BB, BG, BH, BN, BR, BW, BY, BZ, CA, CH, CL, CN, CO, CR, CU, CV, CZ, DE, DJ, DK, DM, DO, DZ, EC, EE, EG, ES, FI, GB, GD, GE, GH, GM, GT, HN, HR, HU, ID, IL, IN, IQ, IR, IS, IT, JM, JO, JP, KE, KG, KH, KN, KP, KR, KW, KZ, LA, LC, LK, LR, LS, LU, LY, MA, MD, ME, MG, MK, MN, MW, MX, MY, MZ, NA, NG, NI, NO, NZ, OM, PA, PE, PG, PH, PL, PT, QA, RO, RS, RU, RW, SA, SC, SD, SE, SG, SK, SL, ST, SV, SY, TH, TJ, TM, TN, TR, TT, TZ, UA, UG, US, UZ, VC, VN, WS, ZA, ZM, ZW.

(84) Designated States *(unless otherwise indicated, for every kind of regional protection available)*: ARIPO (BW, GH, GM, KE, LR, LS, MW, MZ, NA, RW, SC, SD, SL, ST, SZ, TZ, UG, ZM, ZW), Eurasian (AM, AZ, BY, KG, KZ, RU, TJ, TM), European (AL, AT, BE, BG, CH, CY, CZ, DE, DK, EE, ES, FI, FR, GB, GR, HR, HU, IE, IS, IT, LT, LU, LV, MC, MK, MT, NL, NO, PL, PT, RO, RS, SE, SI, SK, SM, TR), OAPI (BF, BJ, CF, CG, CI, CM, GA, GN, GQ, GW, KM, ML, MR, NE, SN, TD, TG).

Published:
— *with international search report (Art. 21(3))*

(54) Title: A FOOD BOX

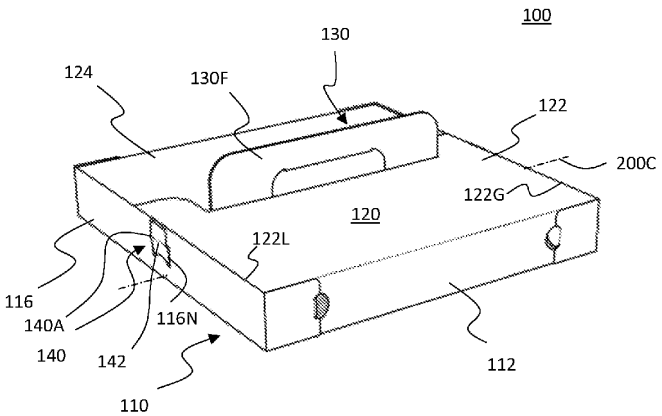

Fig. 1

(57) Abstract: A food box comprising a tray having a base and a perimeter wall extending from the base, the perimeter wall includes a front wall portion and a rear wall portion opposite thereof, a cover adapted to cover the tray, the cover includes a proximal cover panel pivotally connected to the front wall portion and a distal cover panel pivotally connected to the rear wall portion such that the proximal cover panel and the distal cover panel are rotatable to cover the tray in a covering position, a securing mechanism adapted to secure the proximal cover panel to the tray, such that in the covering position, the proximal cover panel retains the distal cover panel in the covering position and is secured to the tray by the securing mechanism, and a handle pivotally connected to the cover, such that the handle is rotatable between an upright position perpendicular to the cover and a flat position onto and parallel to the cover.

WO 2024/025457 A1