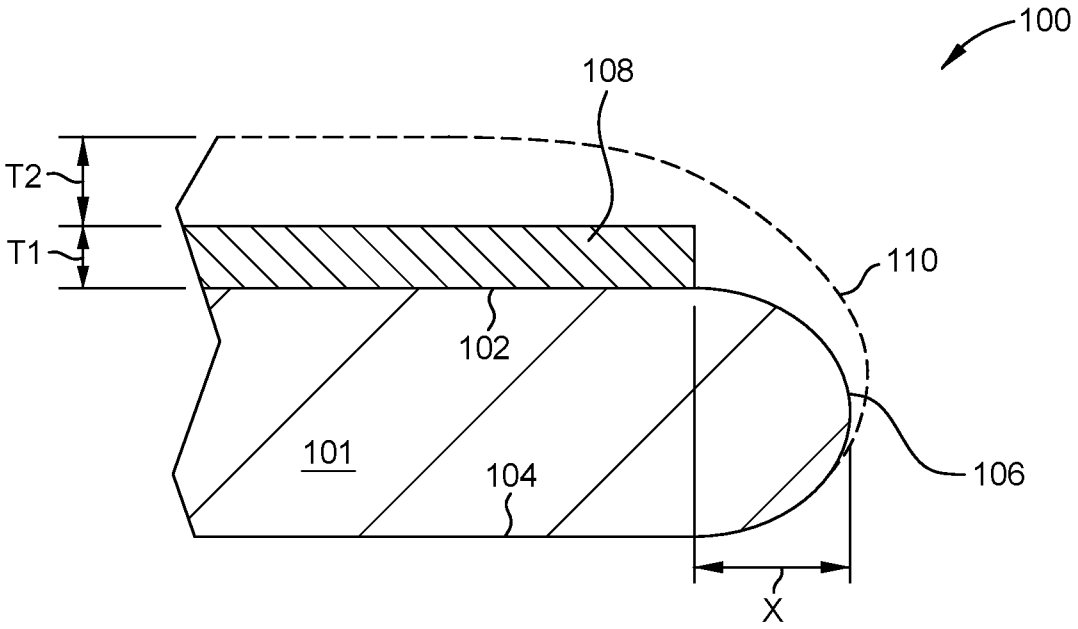

FIG. 1A

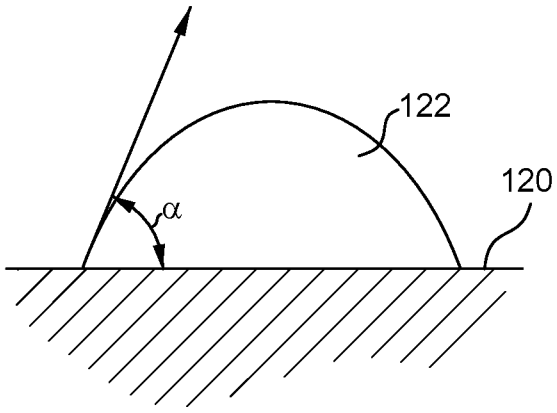

FIG. 1B

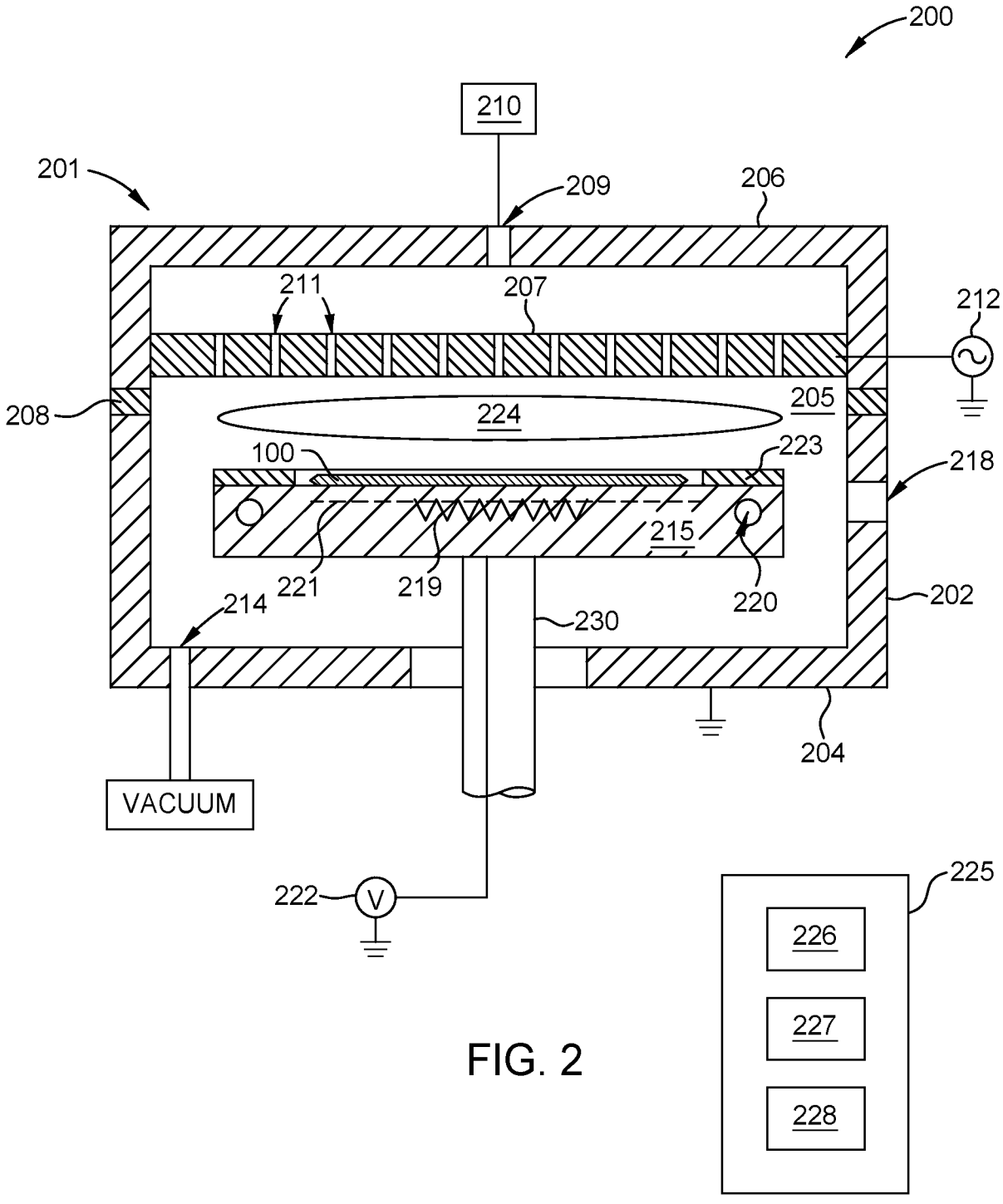
200
210
201
209
206
211
207
212
208
205
224
100
223
218
215
221
219
220
202
214
230
204
VACUUM
222
V
225
226
227
228

FIG. 2

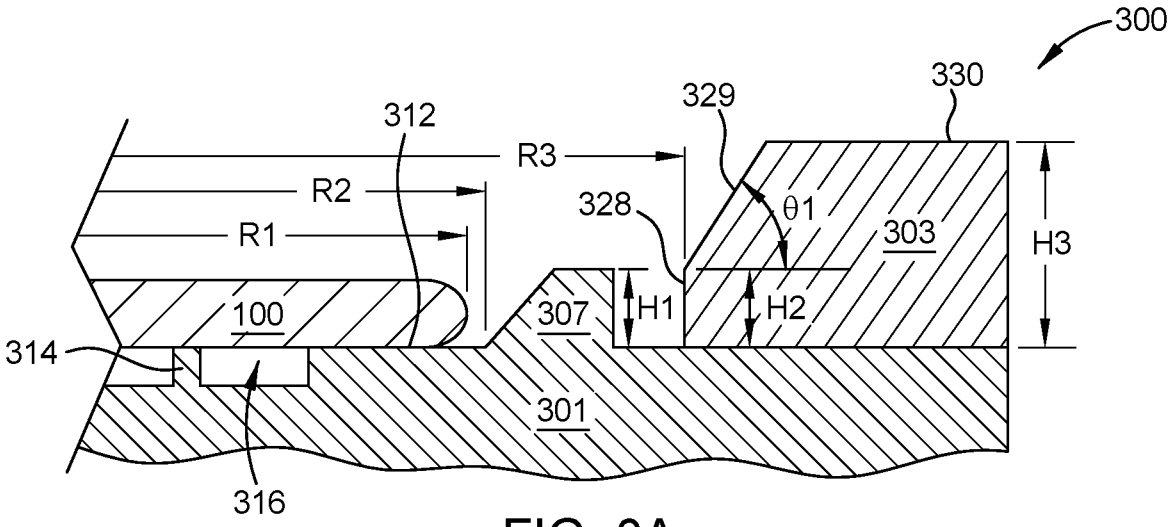

FIG. 3A

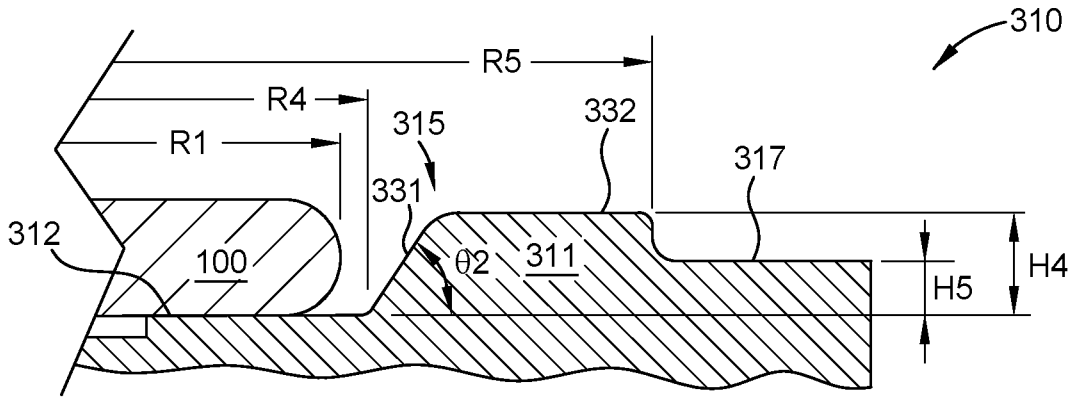

FIG. 3B

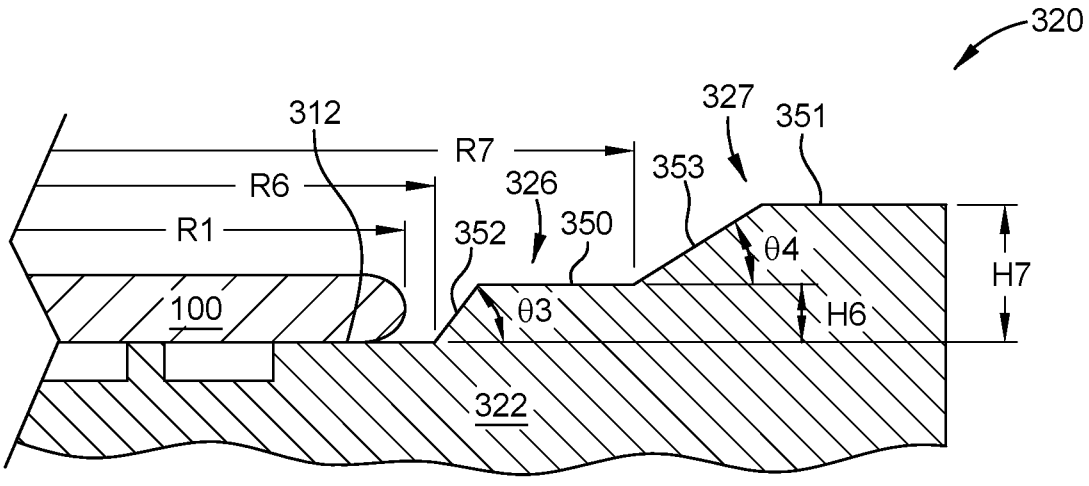

FIG. 3C

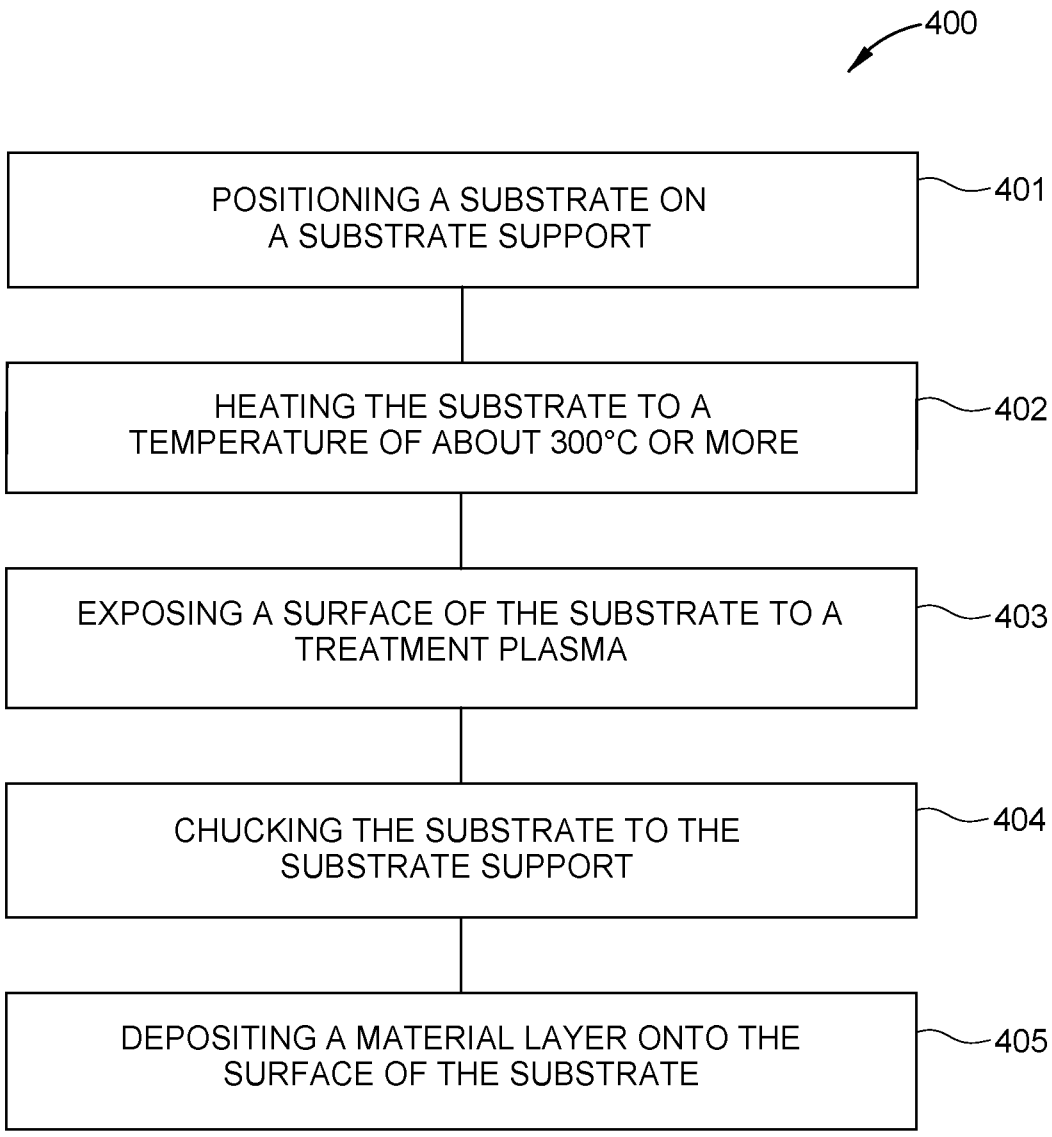
400
POSITIONING A SUBSTRATE ON A SUBSTRATE SUPPORT
401
HEATING THE SUBSTRATE TO A TEMPERATURE OF ABOUT 300°C OR MORE
402
EXPOSING A SURFACE OF THE SUBSTRATE TO A TREATMENT PLASMA
403
CHUCKING THE SUBSTRATE TO THE SUBSTRATE SUPPORT
404
DEPOSITING A MATERIAL LAYER ONTO THE SURFACE OF THE SUBSTRATE
405

FIG. 4