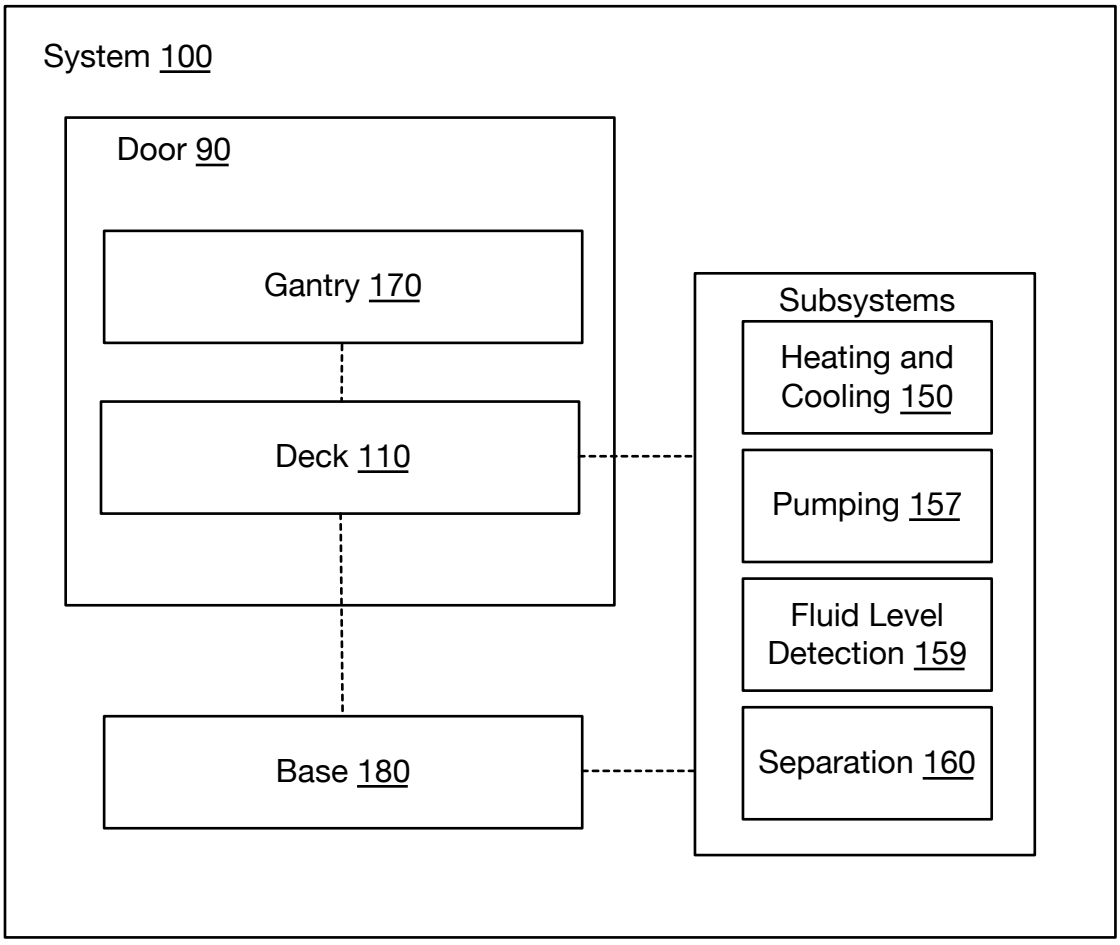
System 100
Door 90
Gantry 170
Deck 110
Base 180
Subsystems
Heating and Cooling 150
Pumping 157
Fluid Level Detection 159
Separation 160

FIGURE 1A

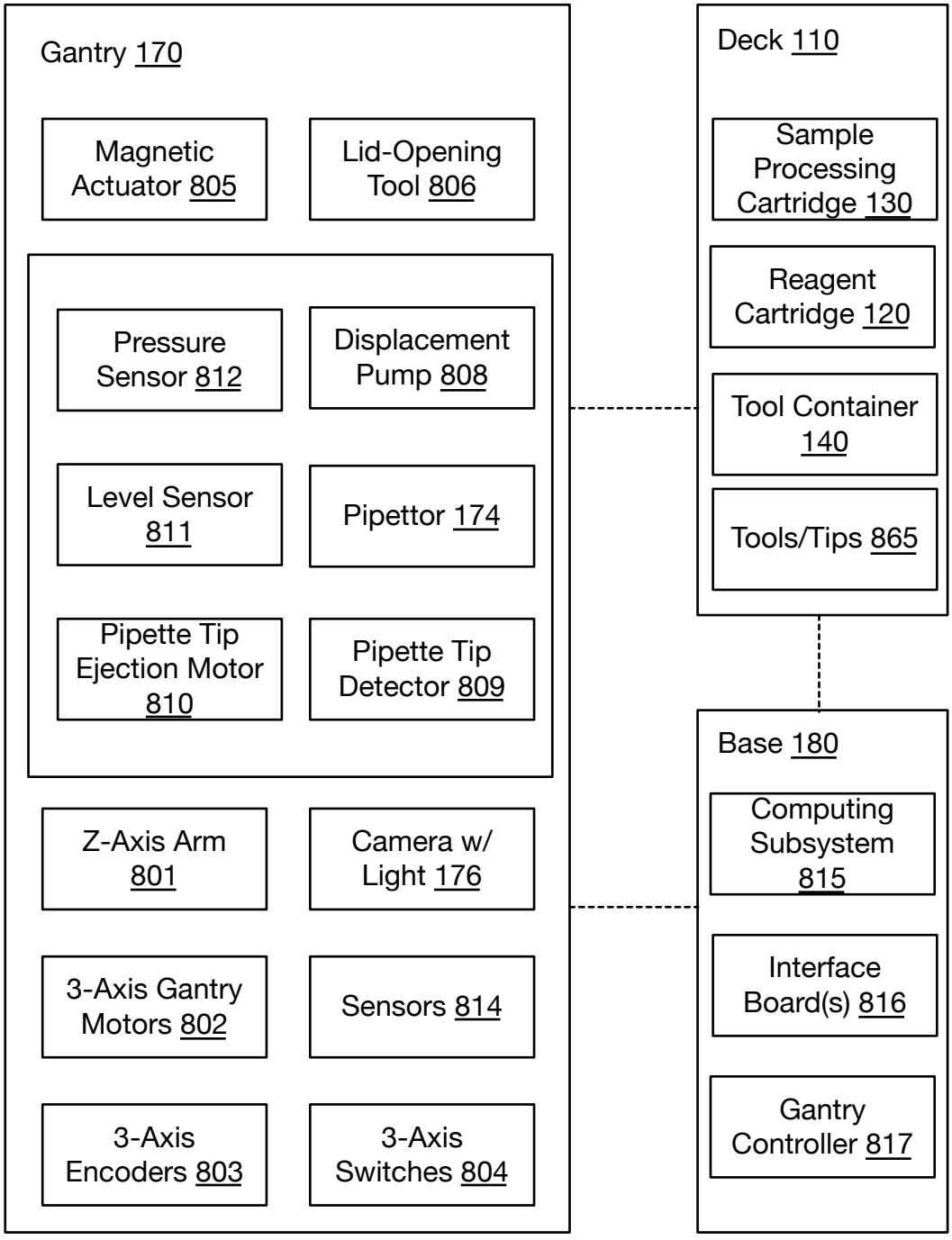
Gantry 170
Magnetic Actuator 805
Lid-Opening Tool 806
Pressure Sensor 812
Displacement Pump 808
Level Sensor 811
Pipettor 174
Pipette Tip Ejection Motor 810
Pipette Tip Detector 809
Z-Axis Arm 801
Camera w/ Light 176
3-Axis Gantry Motors 802
Sensors 814
3-Axis Encoders 803
3-Axis Switches 804
Deck 110
Sample Processing Cartridge 130
Reagent Cartridge 120
Tool Container 140
Tools/Tips 865
Base 180
Computing Subsystem 815
Interface Board(s) 816
Gantry Controller 817

FIGURE 1B

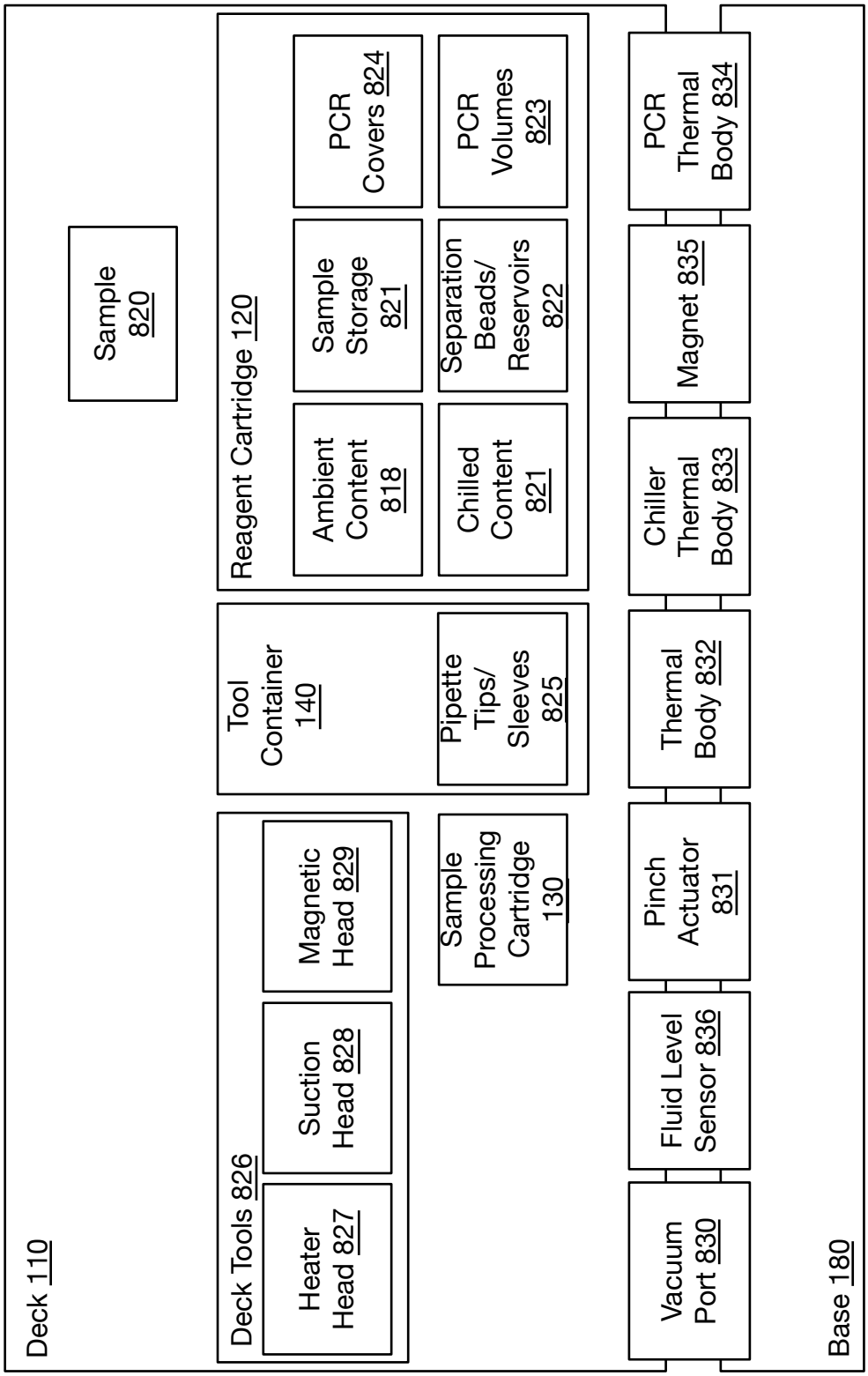
Deck 110
Sample 820
Reagent Cartridge 120
Ambient Content 818
Sample Storage 821
PCR Covers 824
Chilled Content 821
Separation Beads/ Reservoirs 822
PCR Volumes 823
Tool Container 140
Pipette Tips/ Sleeves 825
Deck Tools 826
Heater Head 827
Suction Head 828
Magnetic Head 829
Sample Processing Cartridge 130
Vacuum Port 830
Fluid Level Sensor 836
Pinch Actuator 831
Thermal Body 832
Chiller Thermal Body 833
Magnet 835
PCR Thermal Body 834
Base 180

FIGURE 1C

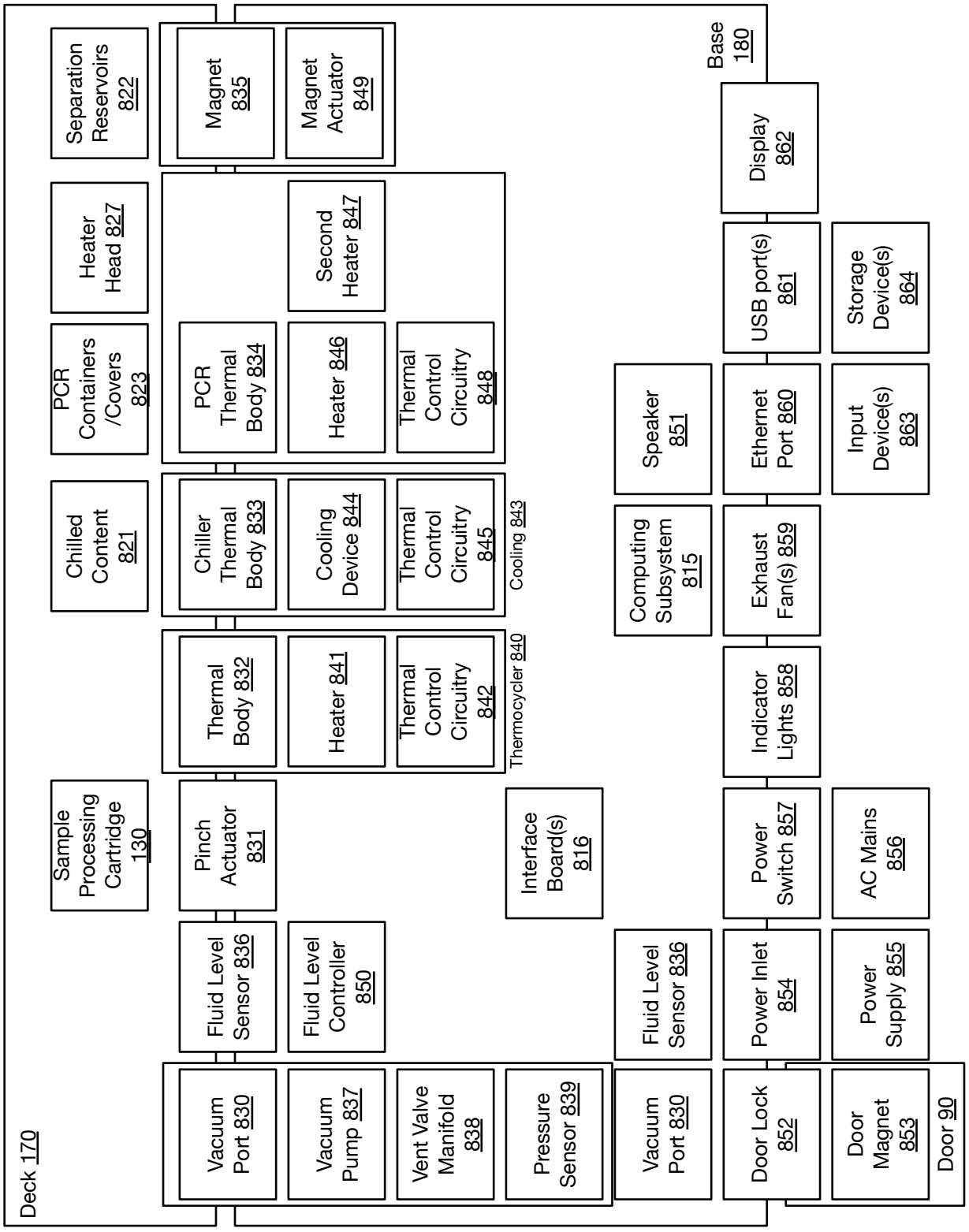
Deck 170
Sample Processing Cartridge 130
Pinch Actuator 831
Fluid Level Sensor 836
Fluid Level Controller 850
Vacuum Port 830
Vacuum Pump 837
Vent Valve Manifold 838
Pressure Sensor 839
Interface Board(s) 816
Thermocycler 840
Thermal Body 832
Heater 841
Thermal Control Circuitry 842
Cooling 843
Chiller Thermal Body 833
Cooling Device 844
Thermal Control Circuitry 845
Chilled Content 821
PCR Containers /Covers 823
PCR Thermal Body 834
Heater 846
Thermal Control Circuitry 848
Second Heater 847
Heater Head 827
Separation Reservoirs 822
Magnet 835
Magnet Actuator 849
Base 180
Display 862
USB port(s) 861
Storage Device(s) 864
Speaker 851
Ethernet Port 860
Input Device(s) 863
Computing Subsystem 815
Exhaust Fan(s) 859
Indicator Lights 858
Power Switch 857
AC Mains 856
Fluid Level Sensor 836
Power Inlet 854
Power Supply 855
Vacuum Port 830
Door Lock 852
Door Magnet 853
Door 90

FIGURE 1D

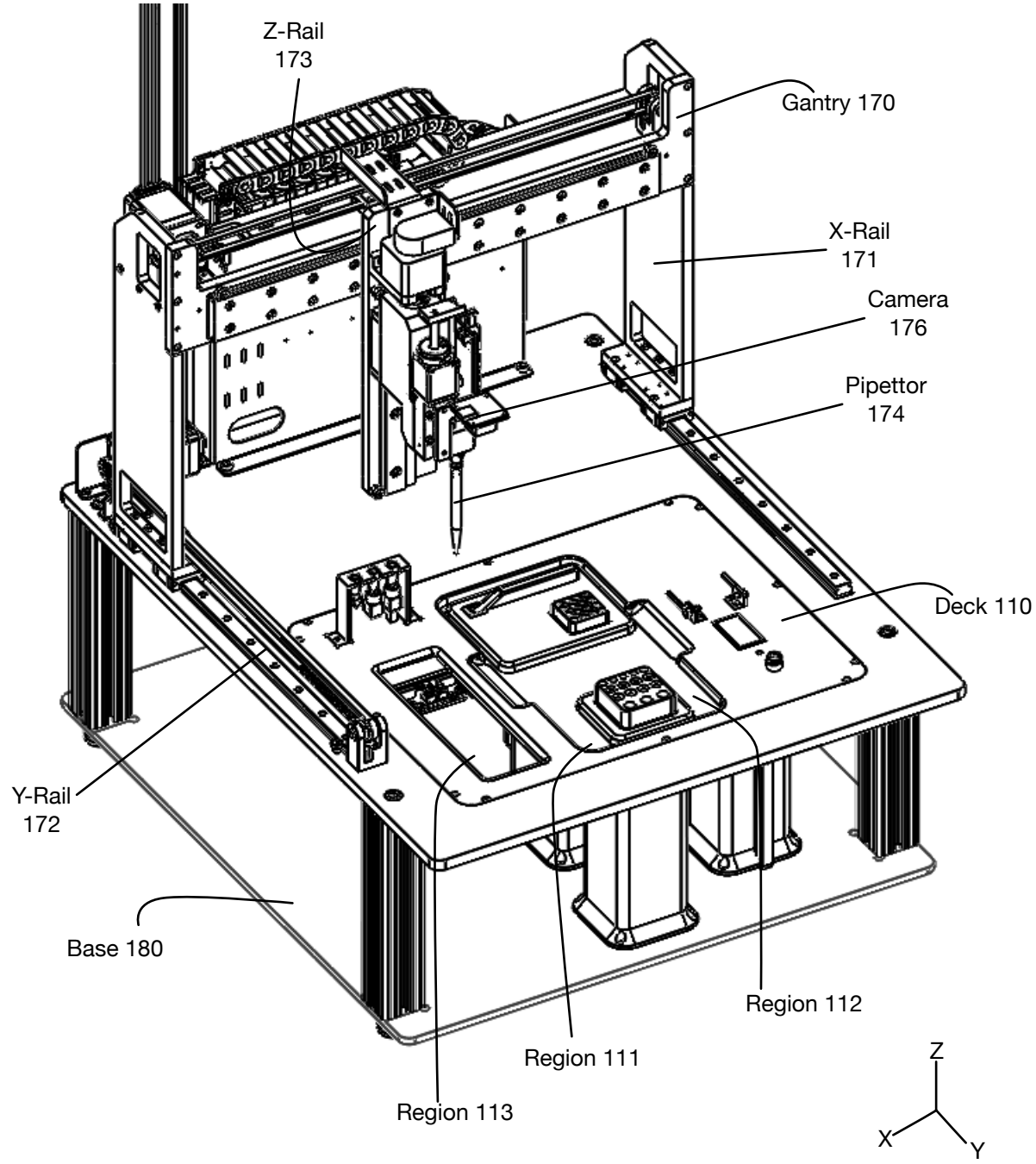
Z-Rail
173
Gantry 170
X-Rail
171
Camera
176
Pipettor
174
Deck 110
Y-Rail
172
Base 180
Region 112
Region 111
Region 113
Z
X
Y

FIGURE 2A

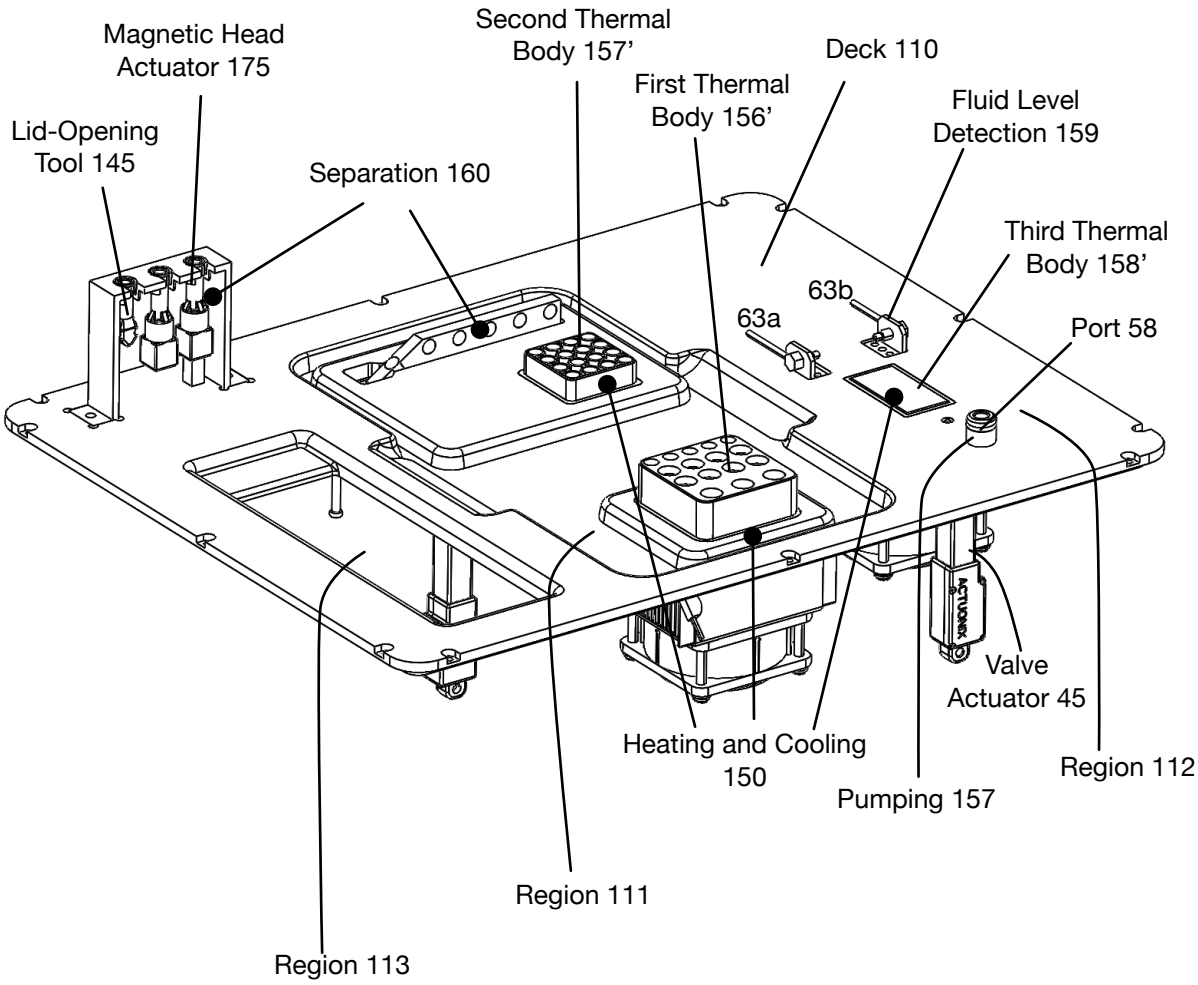
Magnetic Head Actuator 175
Second Thermal Body 157'
Deck 110
First Thermal Body 156'
Fluid Level Detection 159
Lid-Opening Tool 145
Separation 160
Third Thermal Body 158'
63b
63a
Port 58
Valve Actuator 45
Heating and Cooling 150
Region 112
Pumping 157
Region 111
Region 113

FIGURE 2B

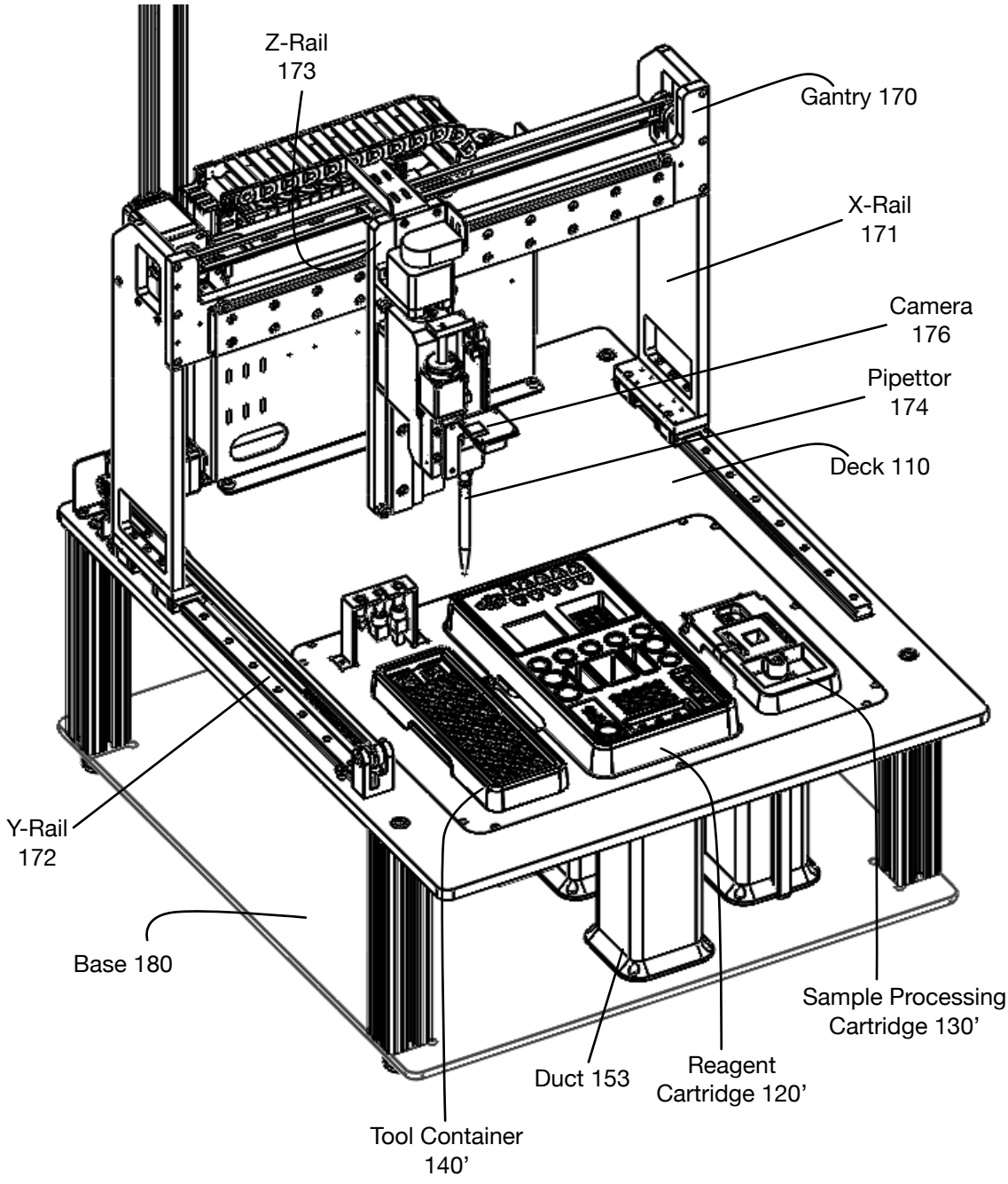
Z-Rail
173
Gantry 170
X-Rail
171
Camera
176
Pipettor
174
Deck 110
Y-Rail
172
Base 180
Sample Processing
Cartridge 130'
Duct 153
Reagent
Cartridge 120'
Tool Container
140'

FIGURE 2C

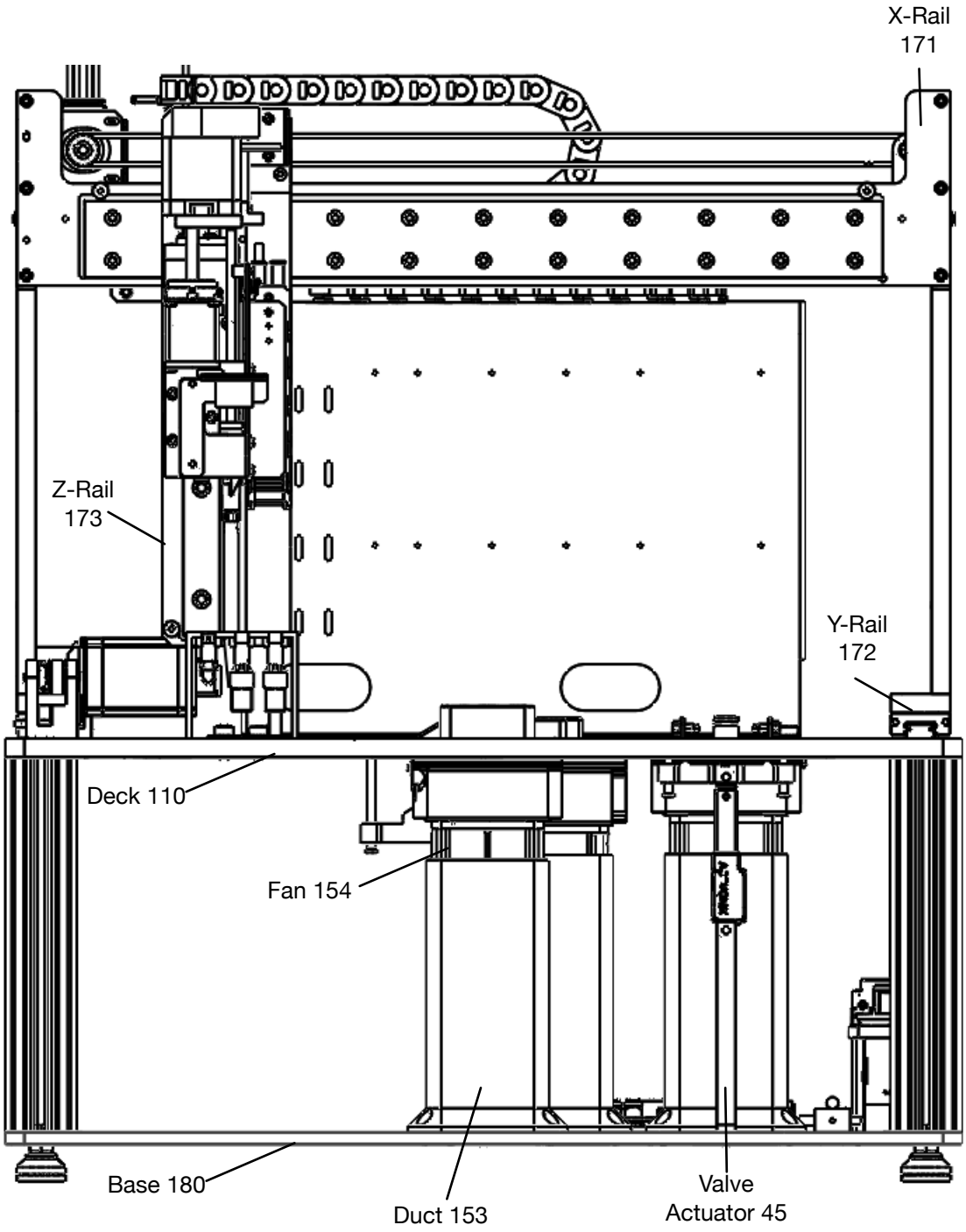
X-Rail
171
Z-Rail
173
Y-Rail
172
Deck 110
Fan 154
Base 180
Duct 153
Valve
Actuator 45

FIGURE 2D

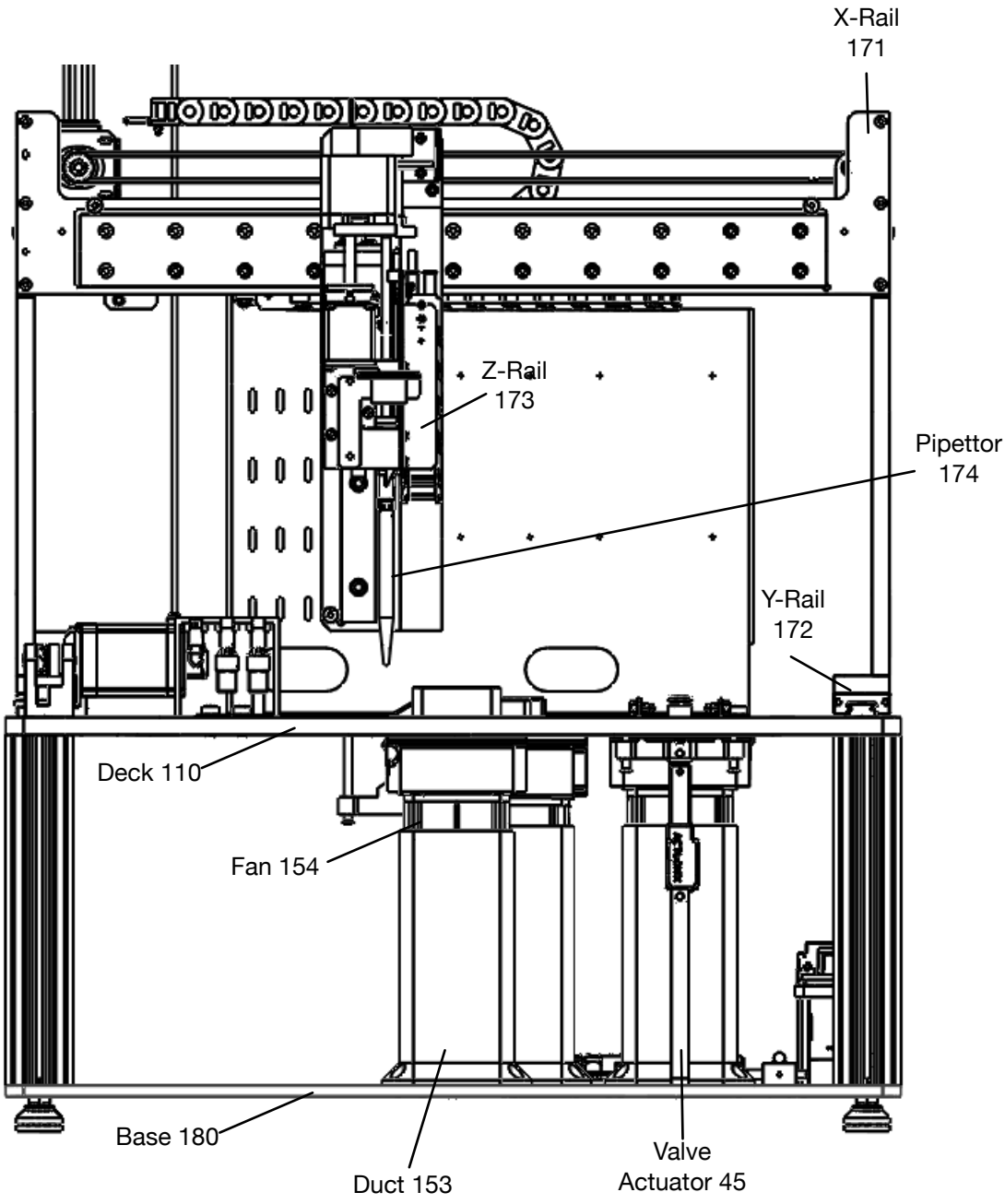
X-Rail
171
Z-Rail
173
Pipettor
174
Y-Rail
172
Deck 110
Fan 154
Base 180
Duct 153
Valve
Actuator 45

FIGURE 2E

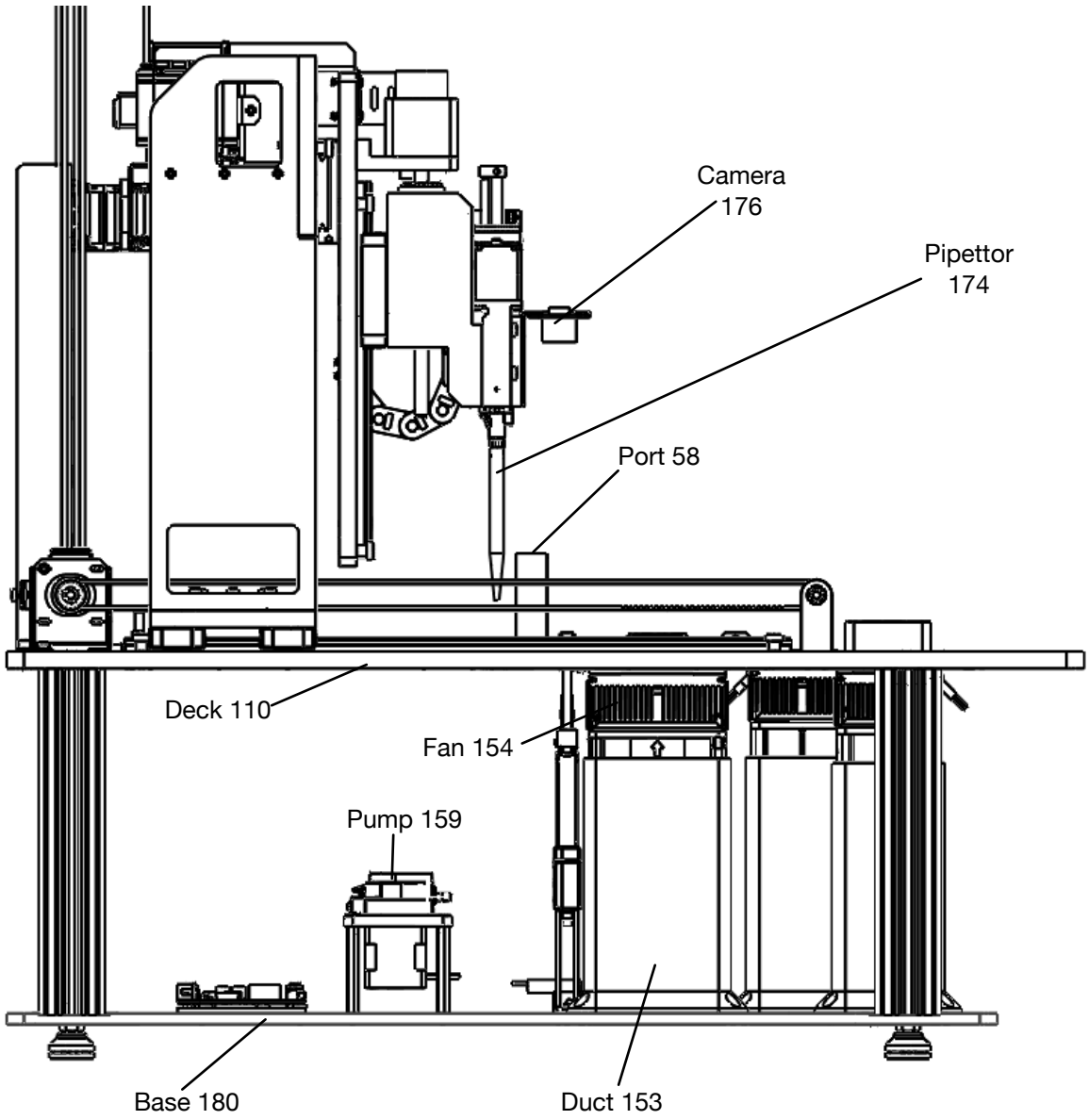
Camera
176
Pipettor
174
Port 58
Deck 110
Fan 154
Pump 159
Base 180
Duct 153

FIGURE 2F

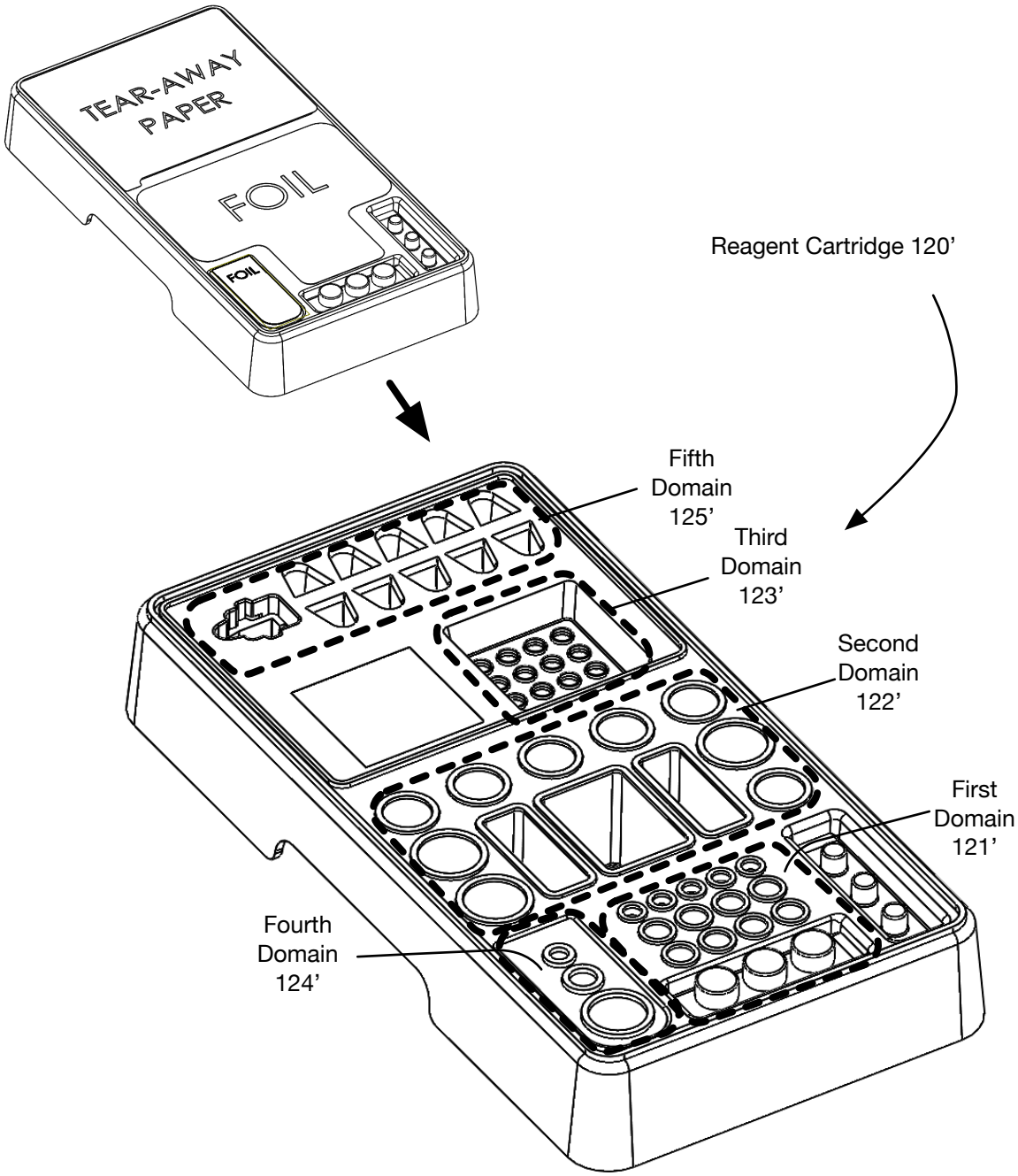
TEAR-AWAY PAPER
FOIL
FOIL
Reagent Cartridge 120'
Fifth Domain 125'
Third Domain 123'
Second Domain 122'
First Domain 121'
Fourth Domain 124'

FIGURE 3A

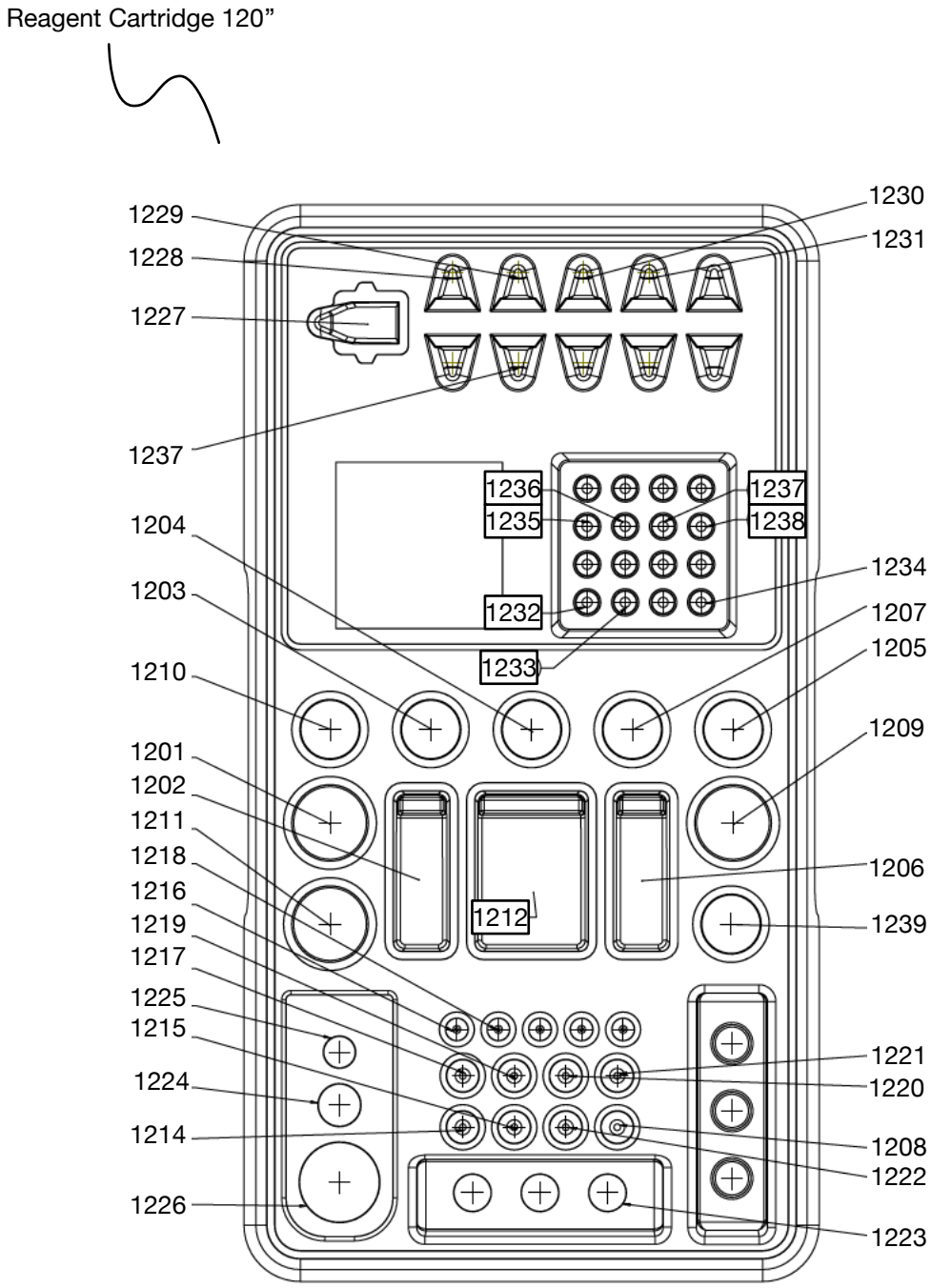
Reagent Cartridge 120”
1229
1228
1227
1237
1204
1203
1210
1201
1202
1211
1218
1216
1219
1217
1225
1215
1224
1214
1226
1230
1231
1236
1235
1232
1233
1237
1238
1234
1207
1205
1209
1206
1239
1212
1221
1220
1208
1222
1223

FIGURE 3B

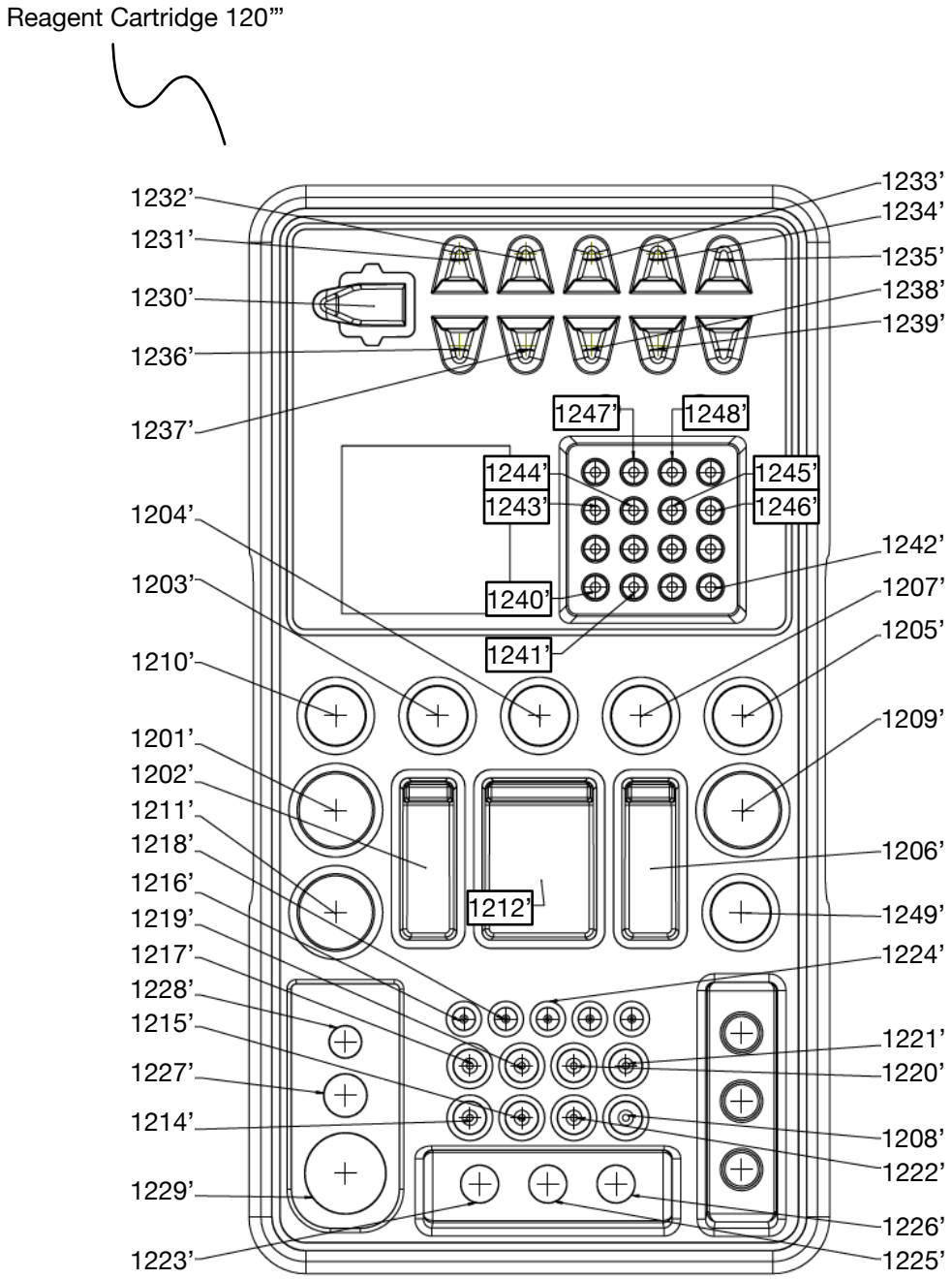
Reagent Cartridge 120""
1232'
1231'
1230'
1236'
1237'
1204'
1203'
1210'
1201'
1202'
1211'
1218'
1216'
1219'
1217'
1228'
1215'
1227'
1214'
1229'
1223'
1233'
1234'
1235'
1238'
1239'
1247'
1248'
1244'
1245'
1243'
1246'
1242'
1240'
1207'
1241'
1205'
1209'
1206'
1212'
1249'
1224'
1221'
1220'
1208'
1222'
1226'
1225'

FIGURE 3C

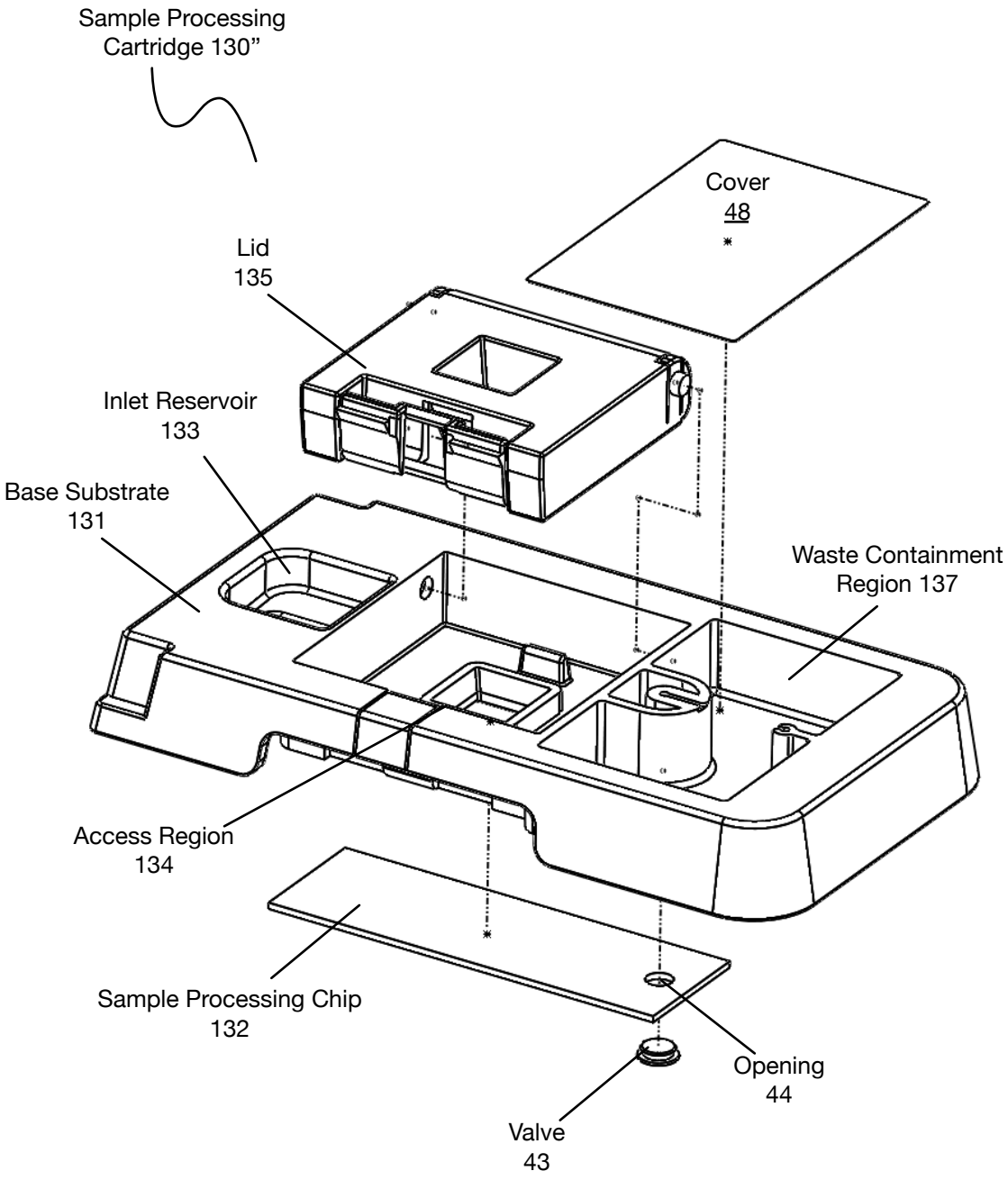
Sample Processing Cartridge 130”
Cover 48
Lid 135
Inlet Reservoir 133
Base Substrate 131
Waste Containment Region 137
Access Region 134
Sample Processing Chip 132
Opening 44
Valve 43

FIGURE 4A

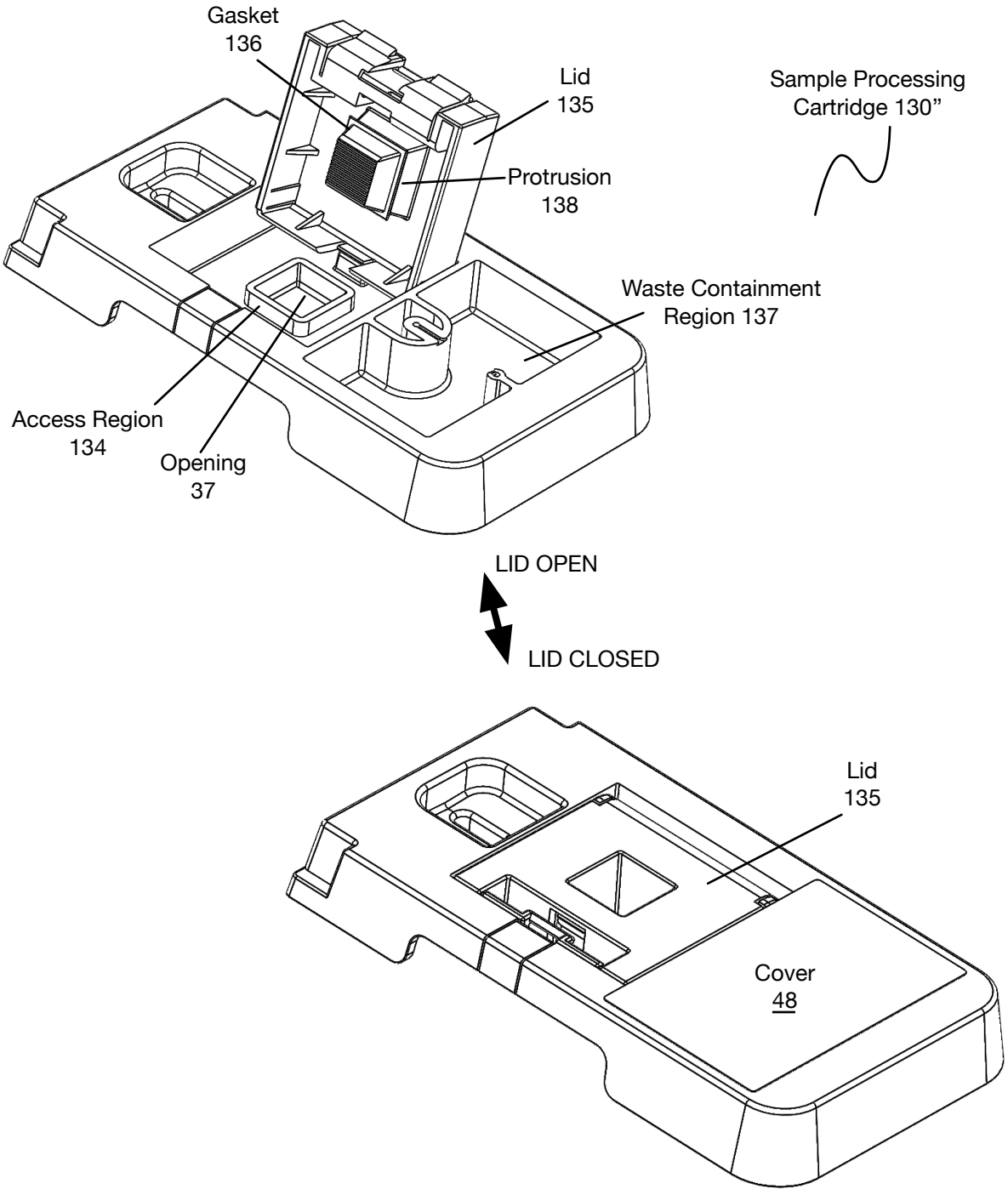
Gasket
136
Lid
135
Sample Processing
Cartridge 130”
Protrusion
138
Waste Containment
Region 137
Access Region
134
Opening
37
LID OPEN
LID CLOSED
Lid
135
Cover
48

FIGURE 4B

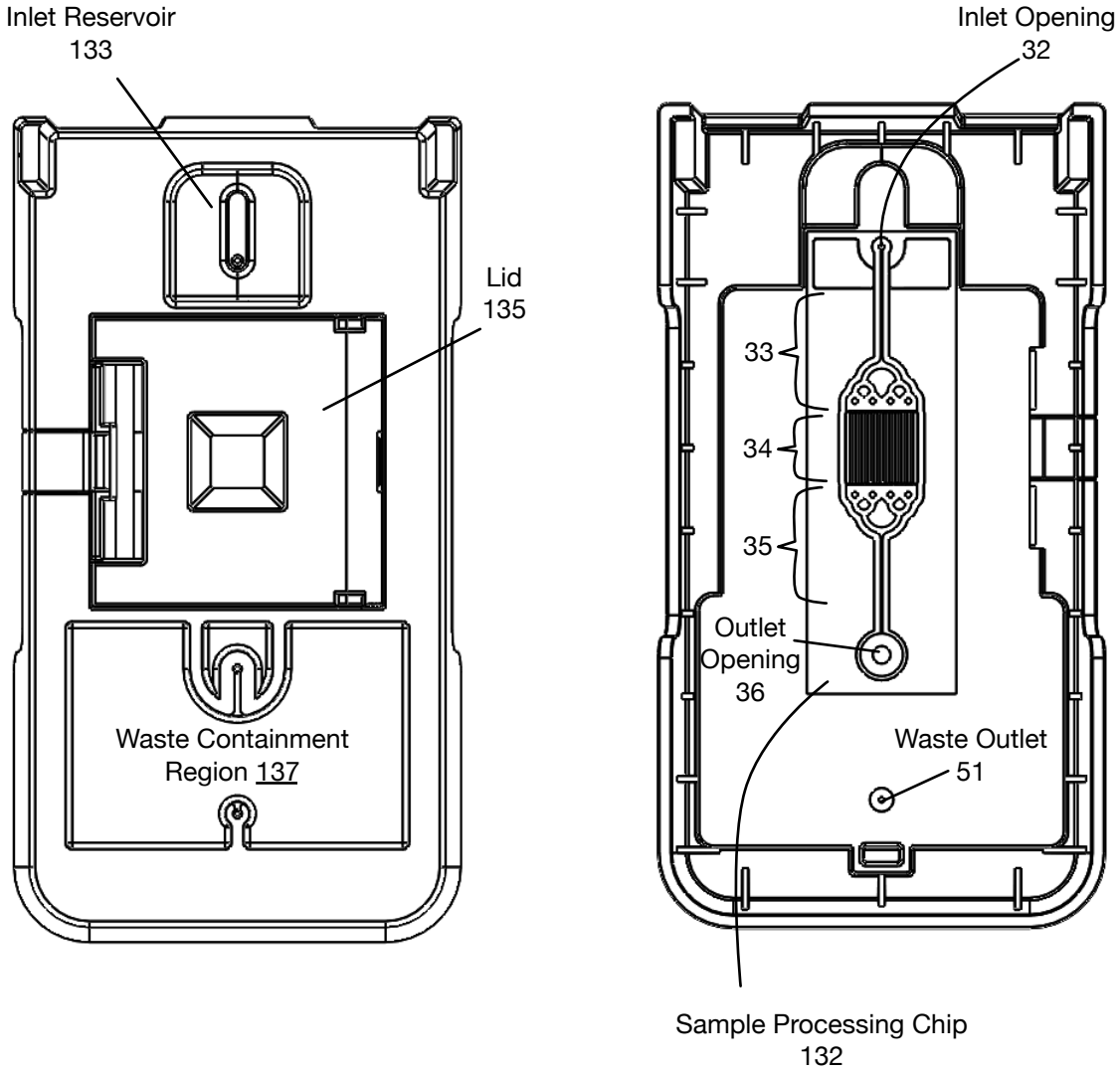
Inlet Reservoir
133
Lid
135
Waste Containment
Region 137
(TOP VIEW)
Inlet Opening
32
33
34
35
Outlet
Opening
36
Waste Outlet
51
Sample Processing Chip
132
(BOTTOM VIEW)

FIGURE 4C

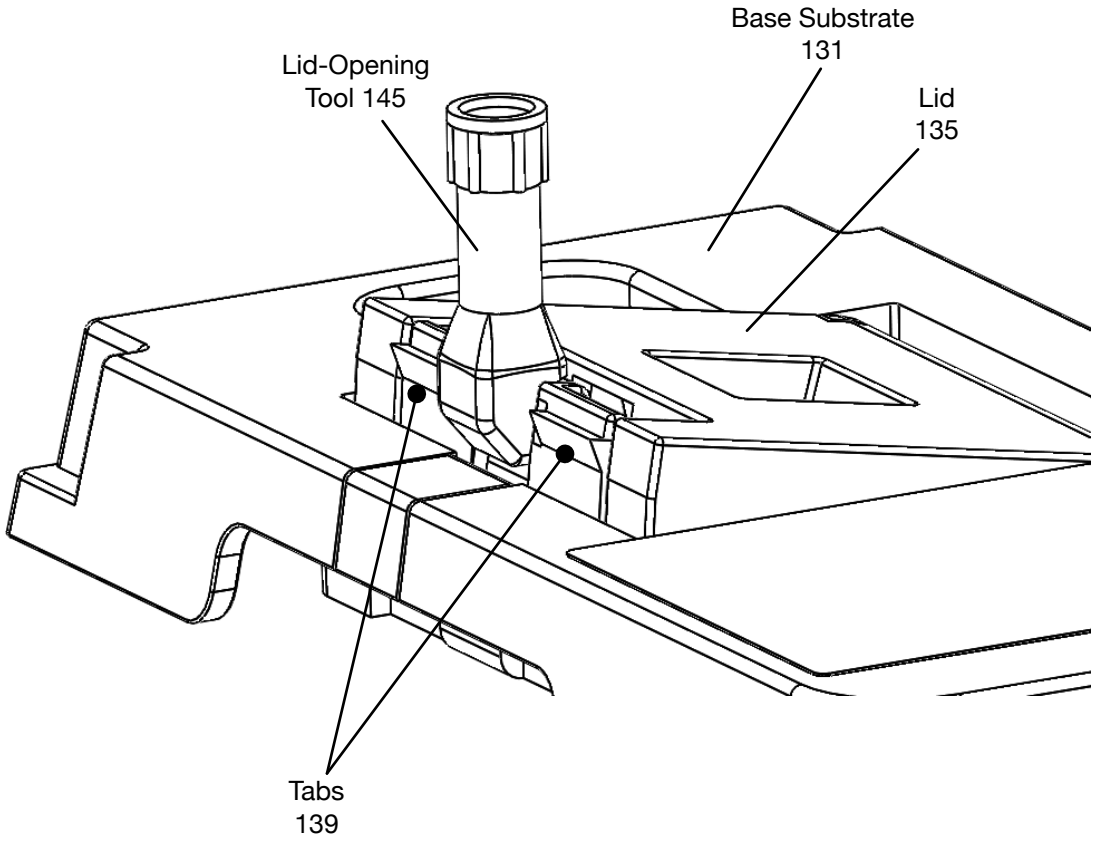

FIGURE 5A

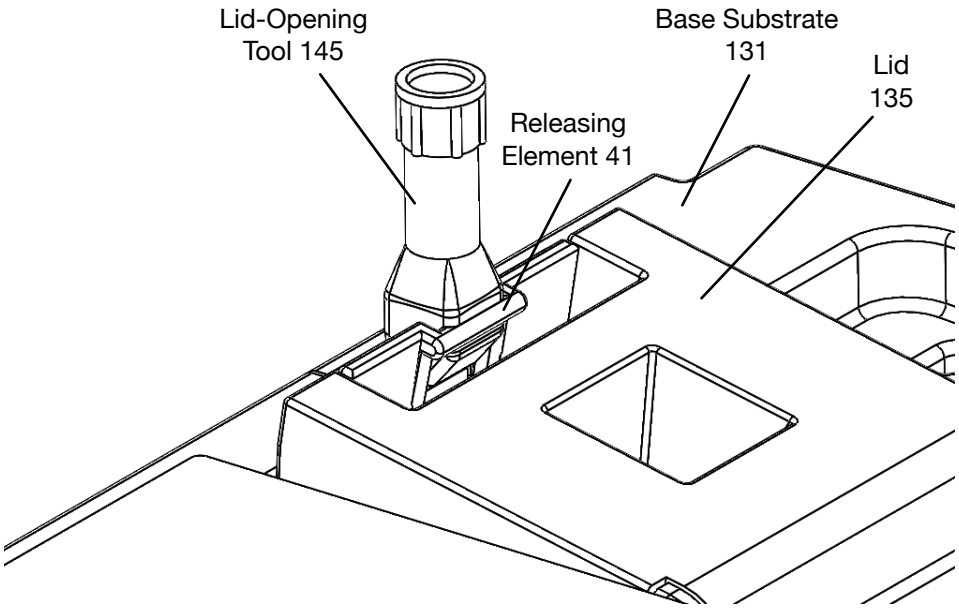

FIGURE 5B

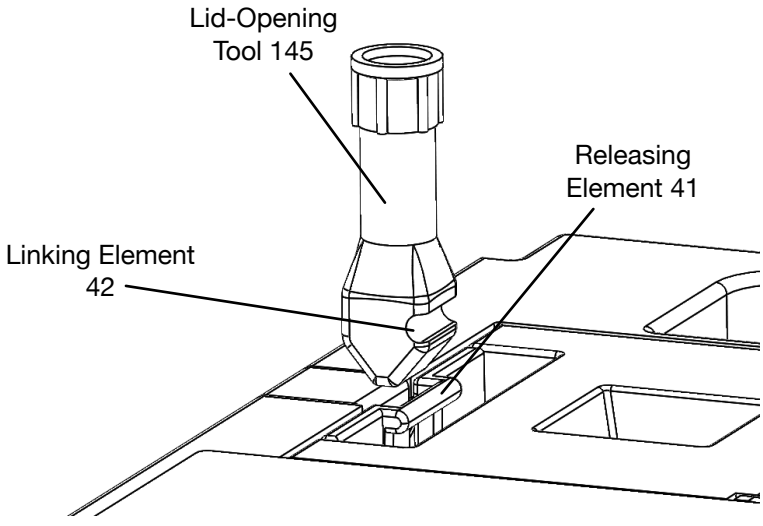

FIGURE 5C

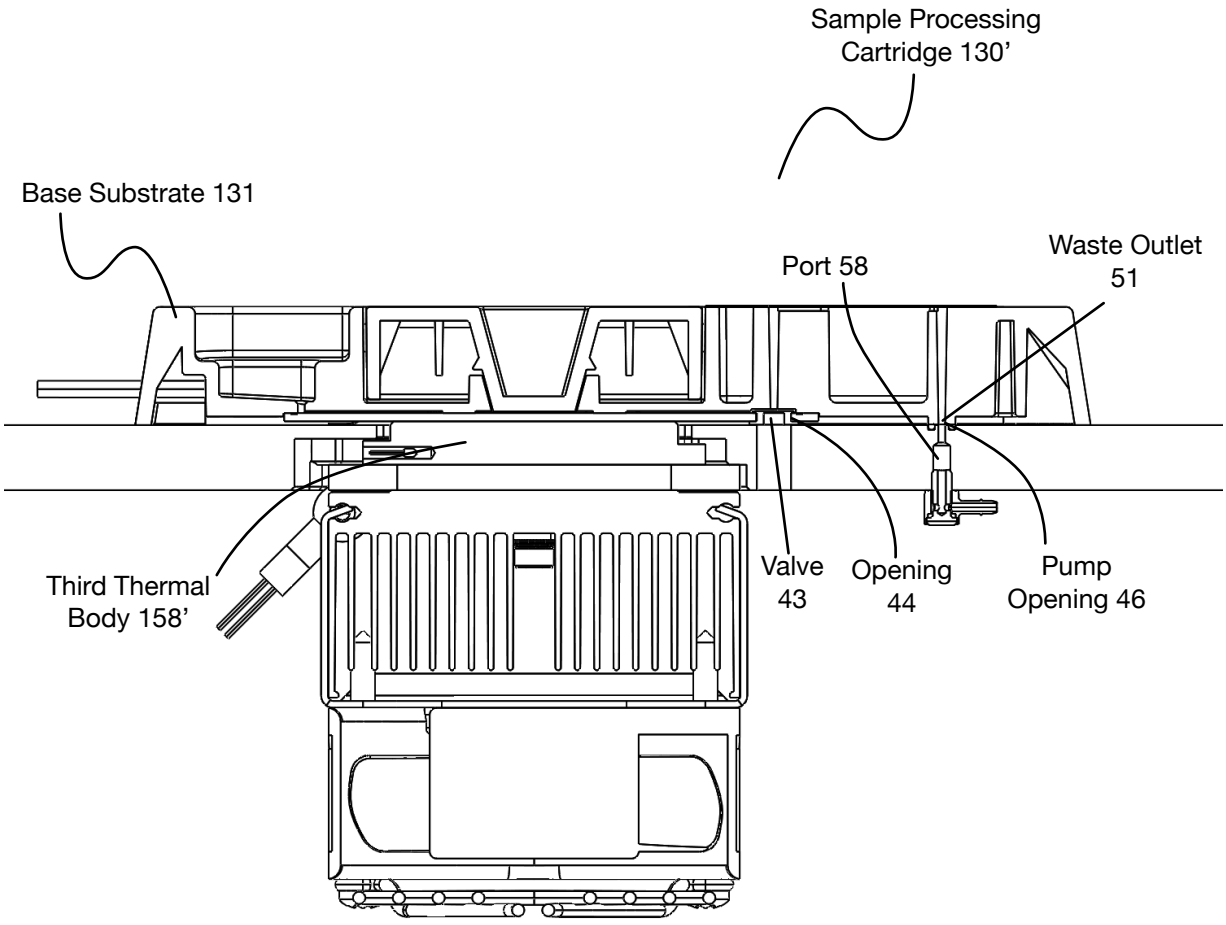

(ELEVATION VIEW,
CROSS-SECTION)

FIGURE 6A

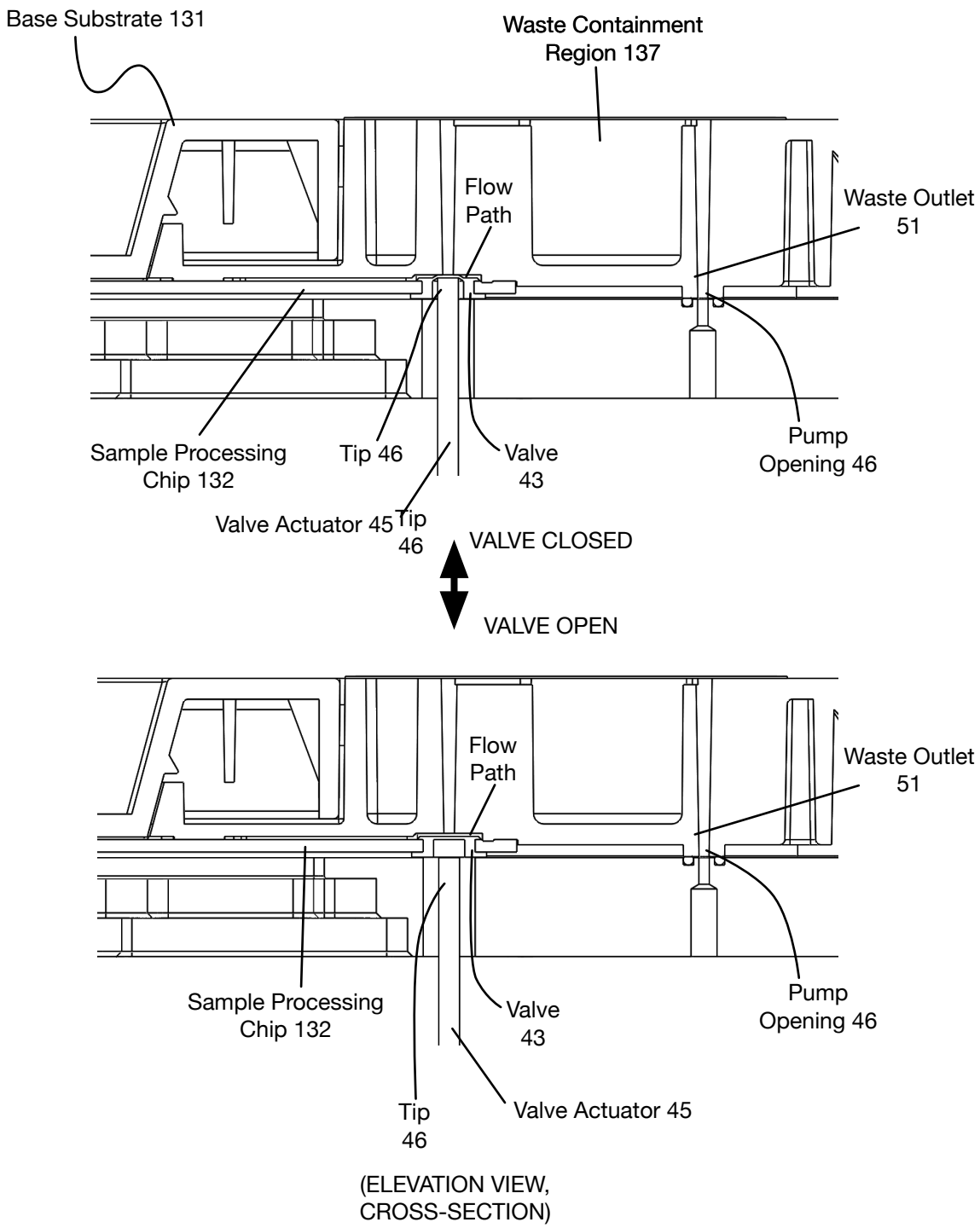
Base Substrate 131
Waste Containment Region 137
Flow Path
Waste Outlet 51
Sample Processing Chip 132
Tip 46
Valve 43
Pump Opening 46
Valve Actuator 45
Tip 46
VALVE CLOSED
VALVE OPEN
Flow Path
Waste Outlet 51
Sample Processing Chip 132
Valve 43
Pump Opening 46
Tip 46
Valve Actuator 45
(ELEVATION VIEW, CROSS-SECTION)

FIGURE 6B

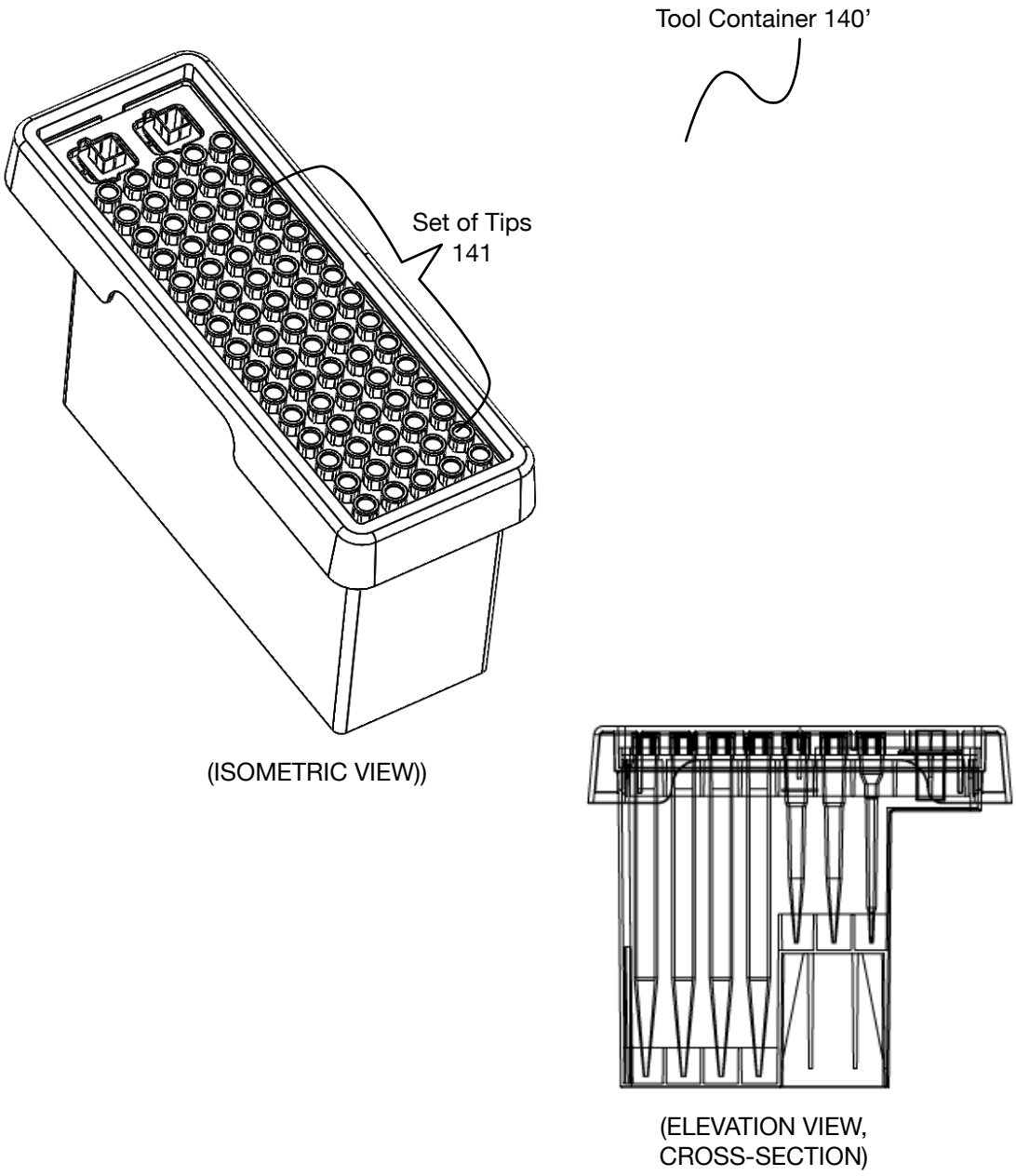
Tool Container 140’
Set of Tips
141
(ISOMETRIC VIEW))
(ELEVATION VIEW,
CROSS-SECTION)

FIGURE 7A

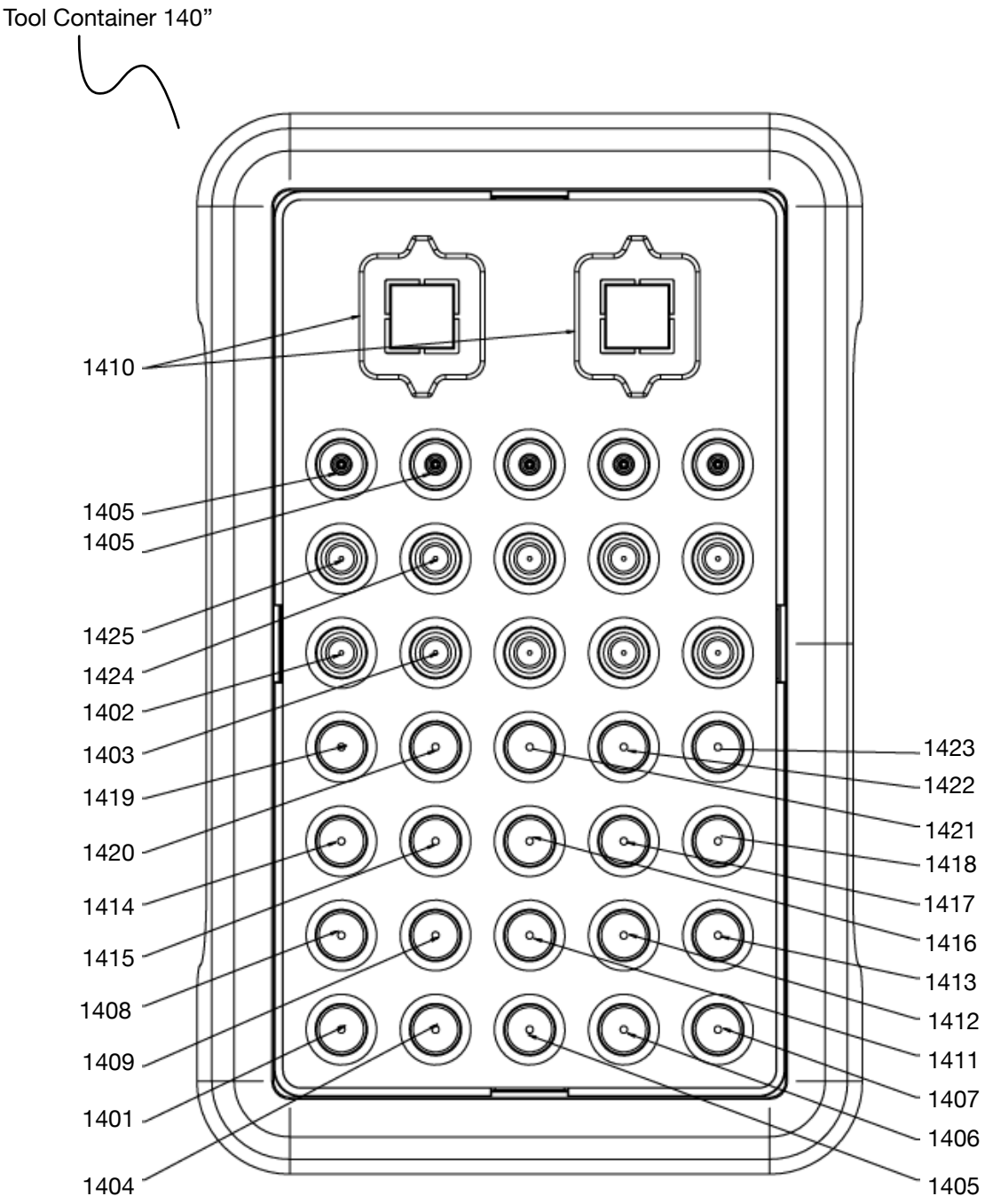
Tool Container 140”
1410
1405
1405
1425
1424
1402
1403
1419
1420
1414
1415
1408
1409
1401
1404
1423
1422
1421
1418
1417
1416
1413
1412
1411
1407
1406
1405

FIGURE 7B

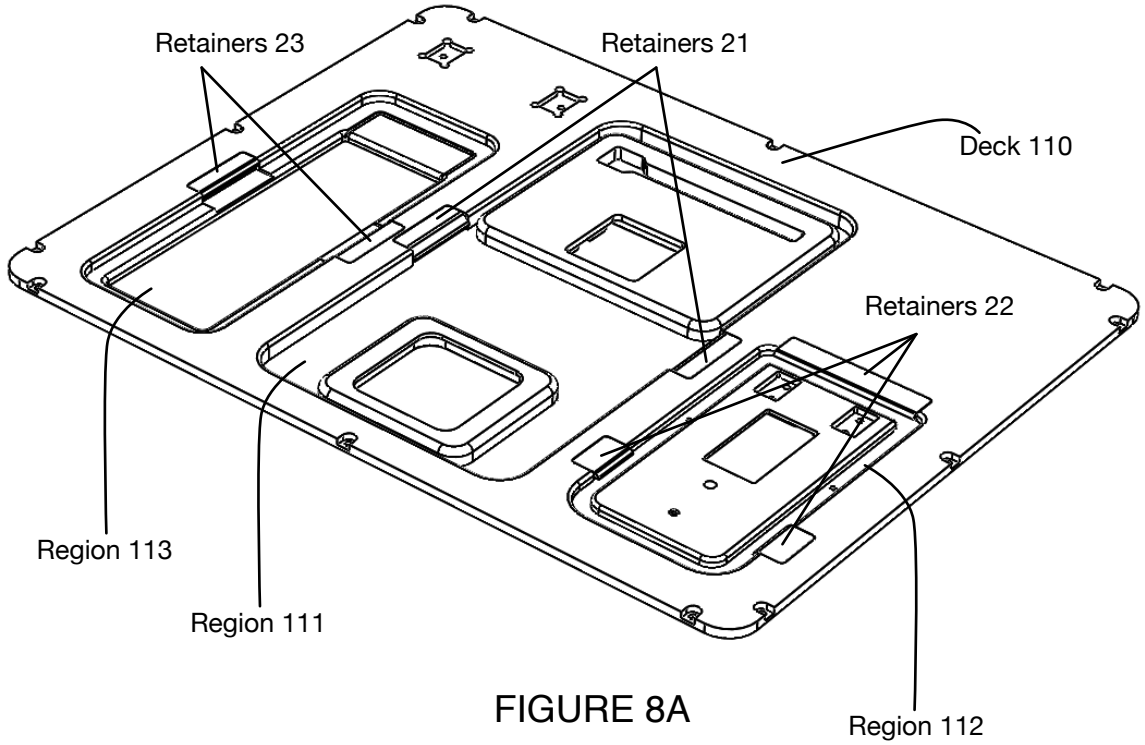

FIGURE 8A

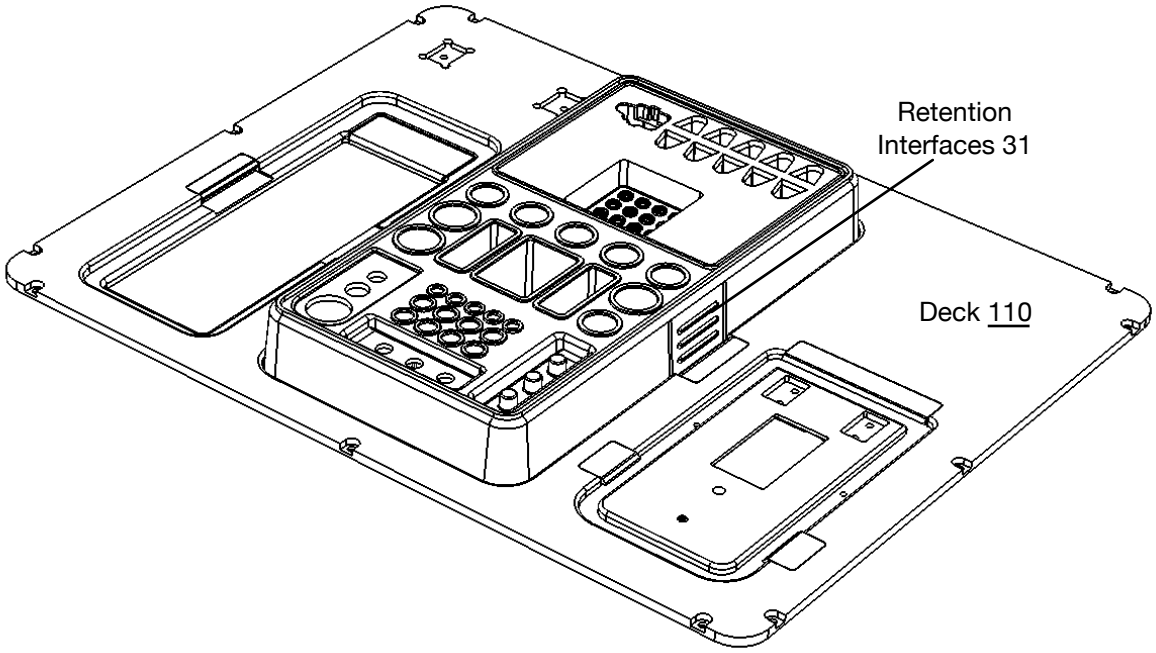

FIGURE 8B

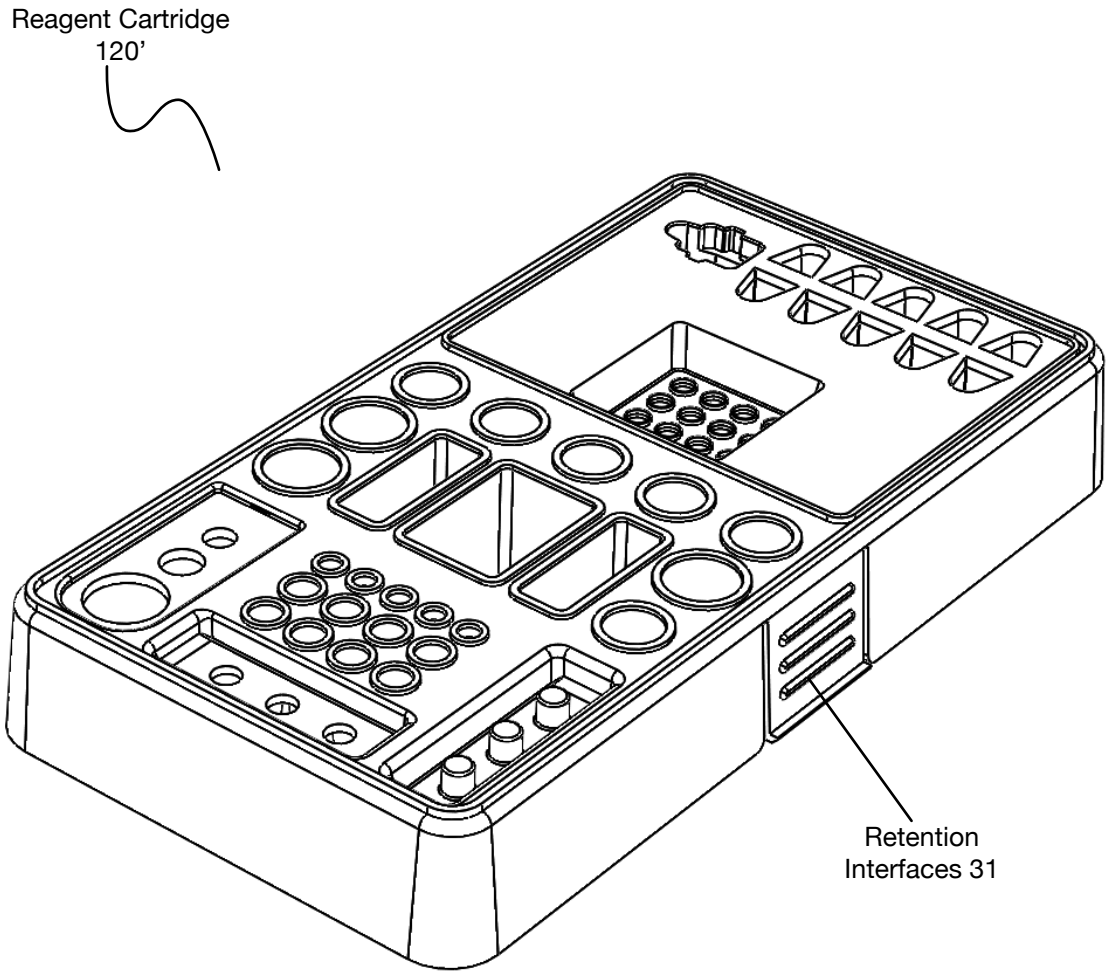

FIGURE 8C

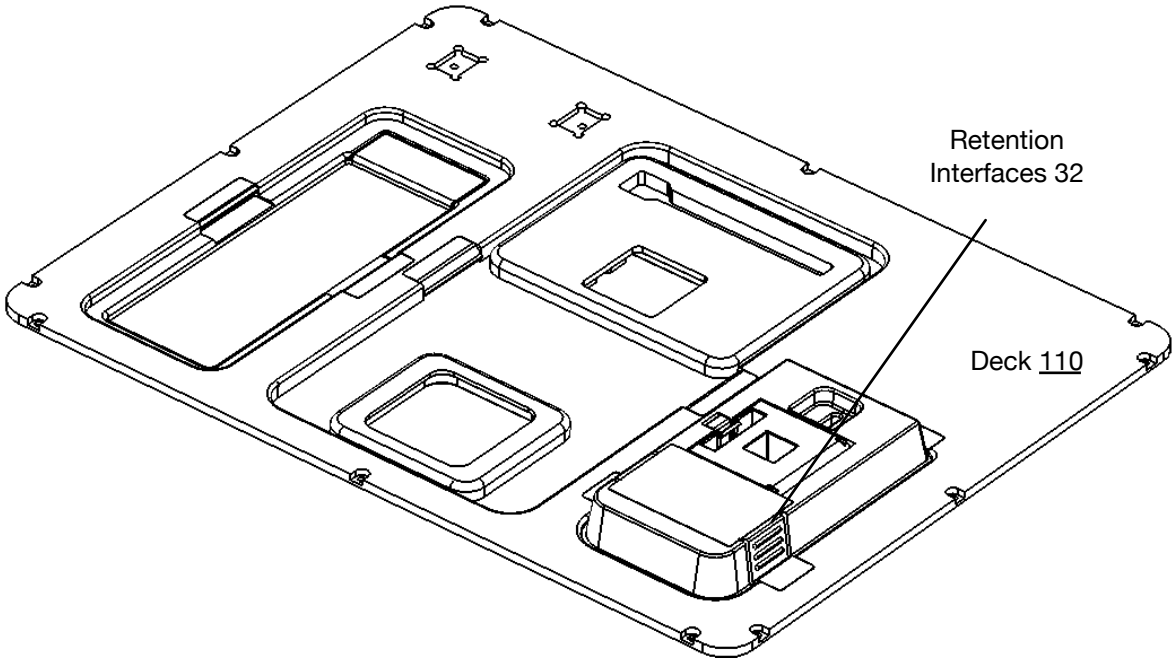

FIGURE 8D

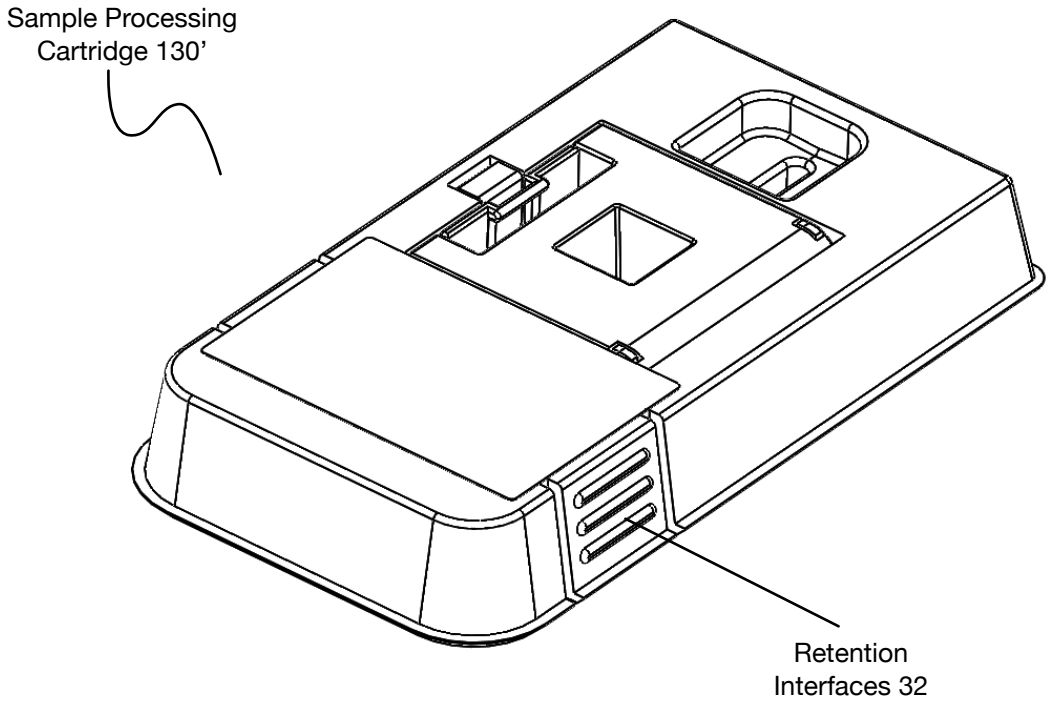

FIGURE 8E

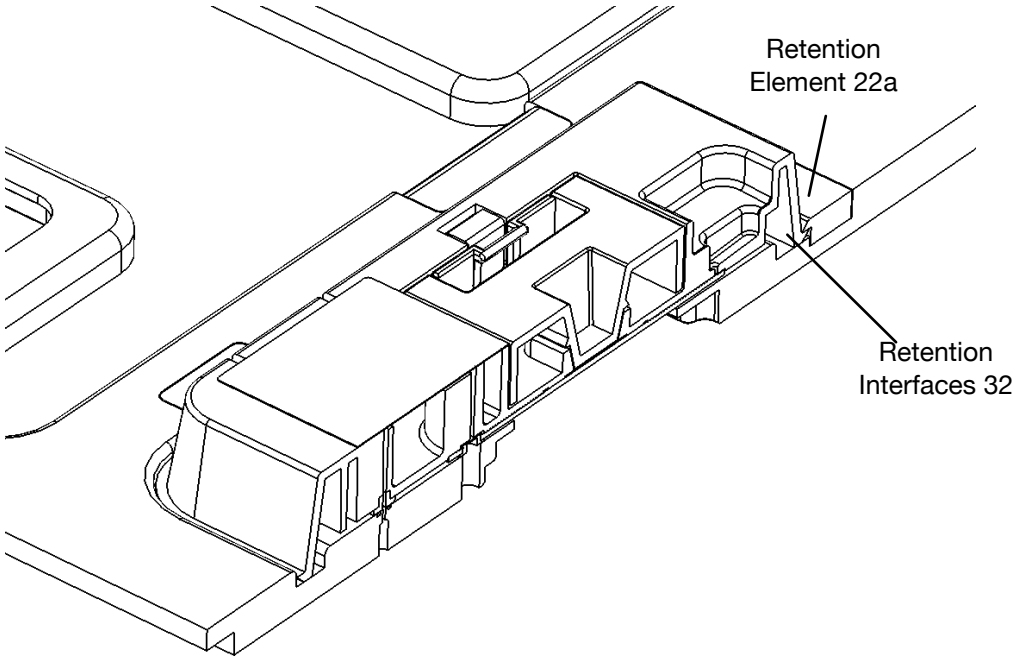

FIGURE 8F

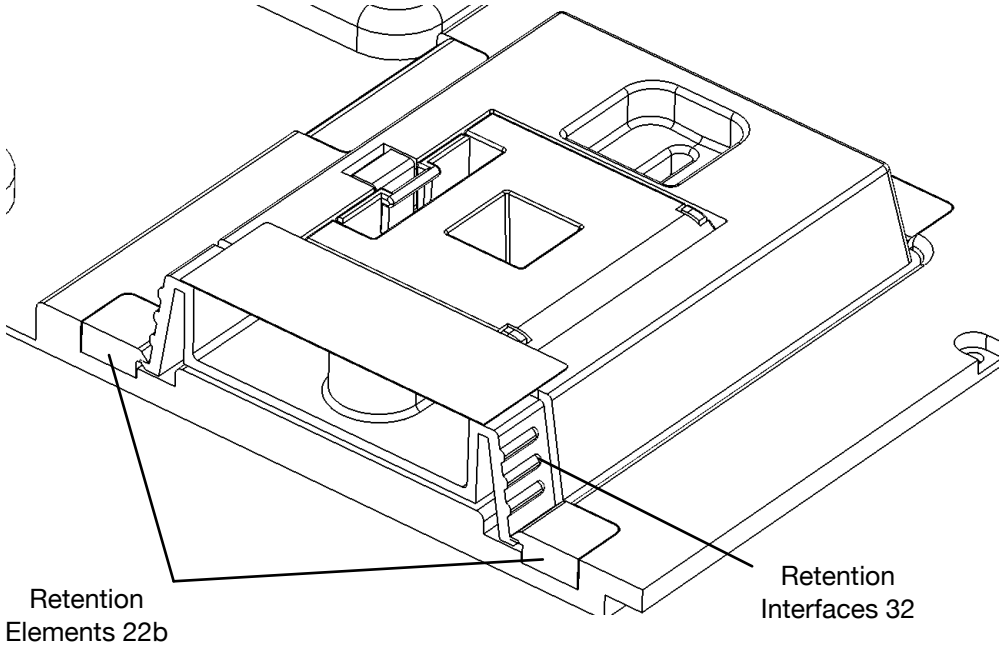

FIGURE 8G

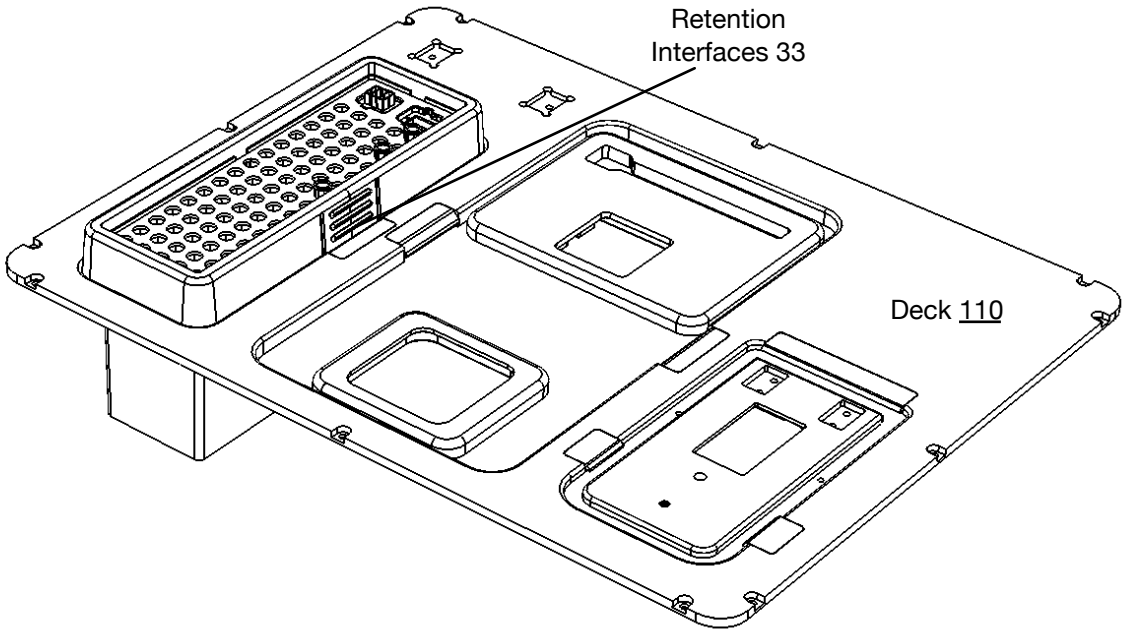

FIGURE 8H

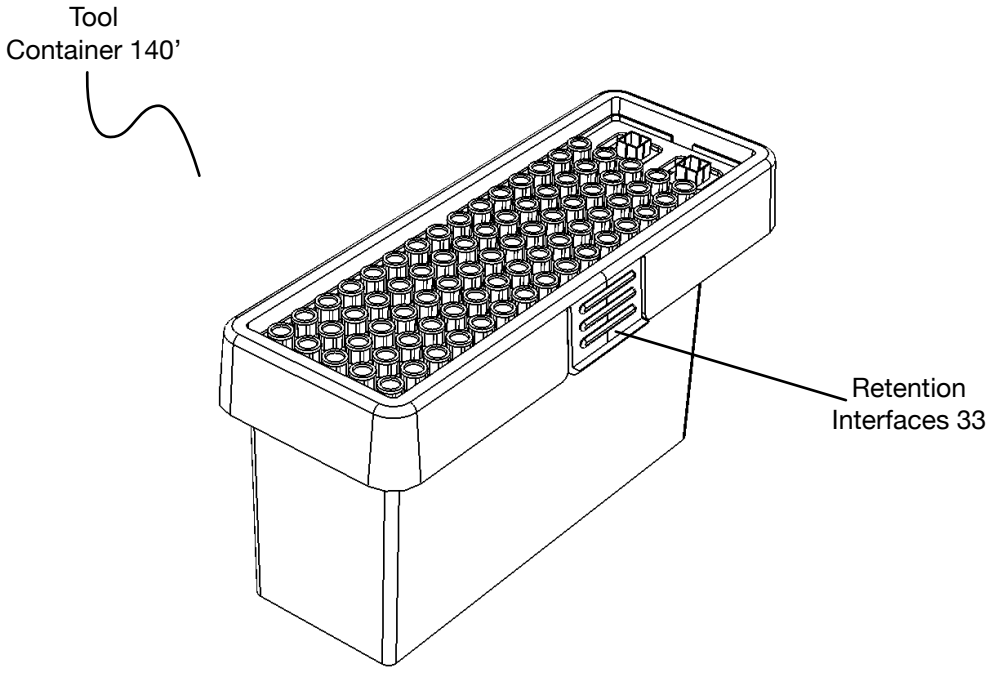

FIGURE 8I

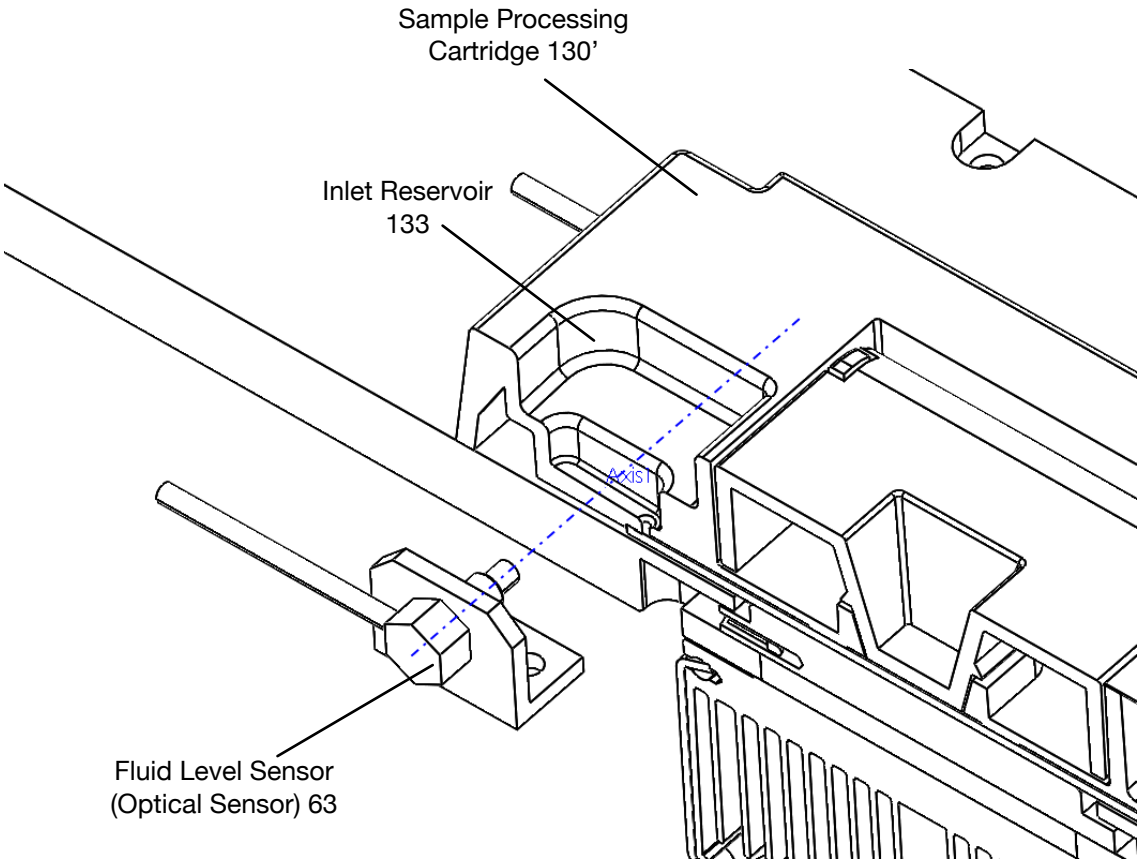
Sample Processing
Cartridge 130'
Inlet Reservoir
133
Axis1
Fluid Level Sensor
(Optical Sensor) 63

FIGURE 9

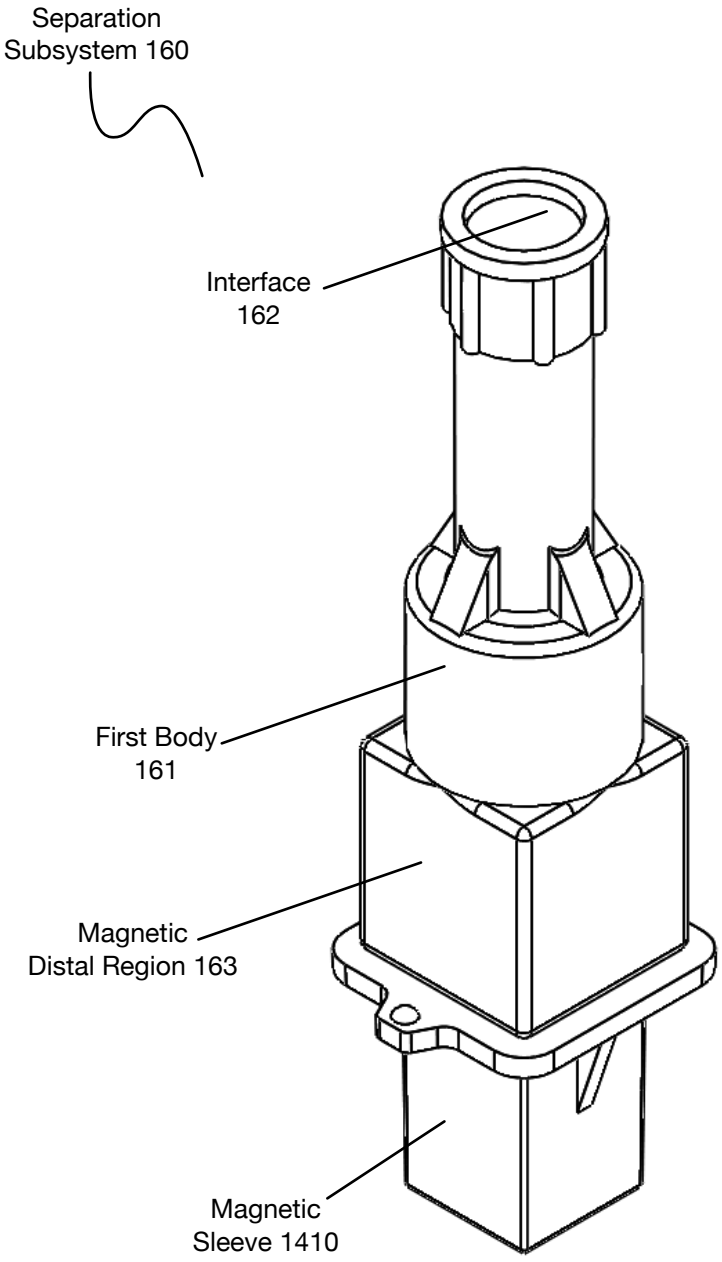
Separation
Subsystem 160
Interface
162
First Body
161
Magnetic
Distal Region 163
Magnetic
Sleeve 1410

FIGURE 10A

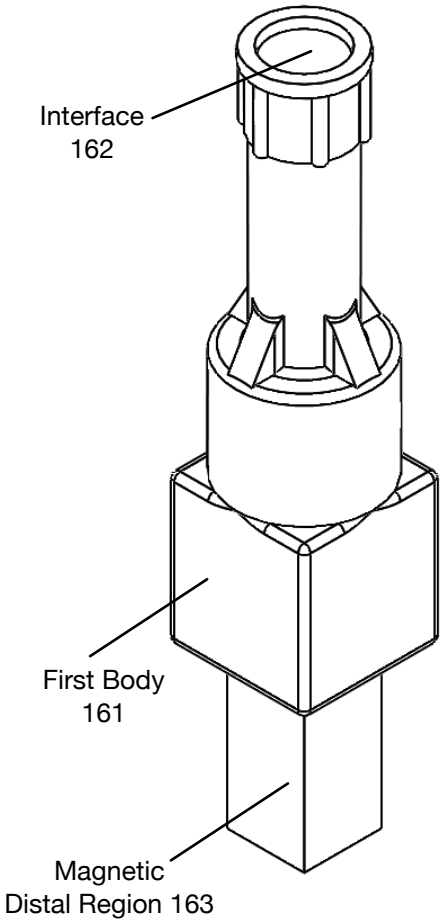

FIGURE 10B

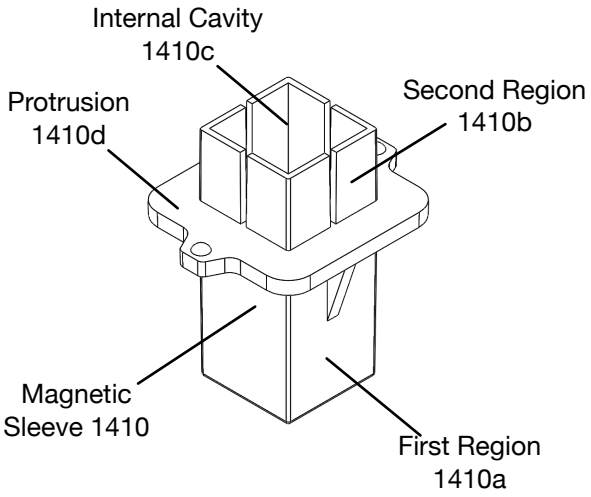

FIGURE 10C

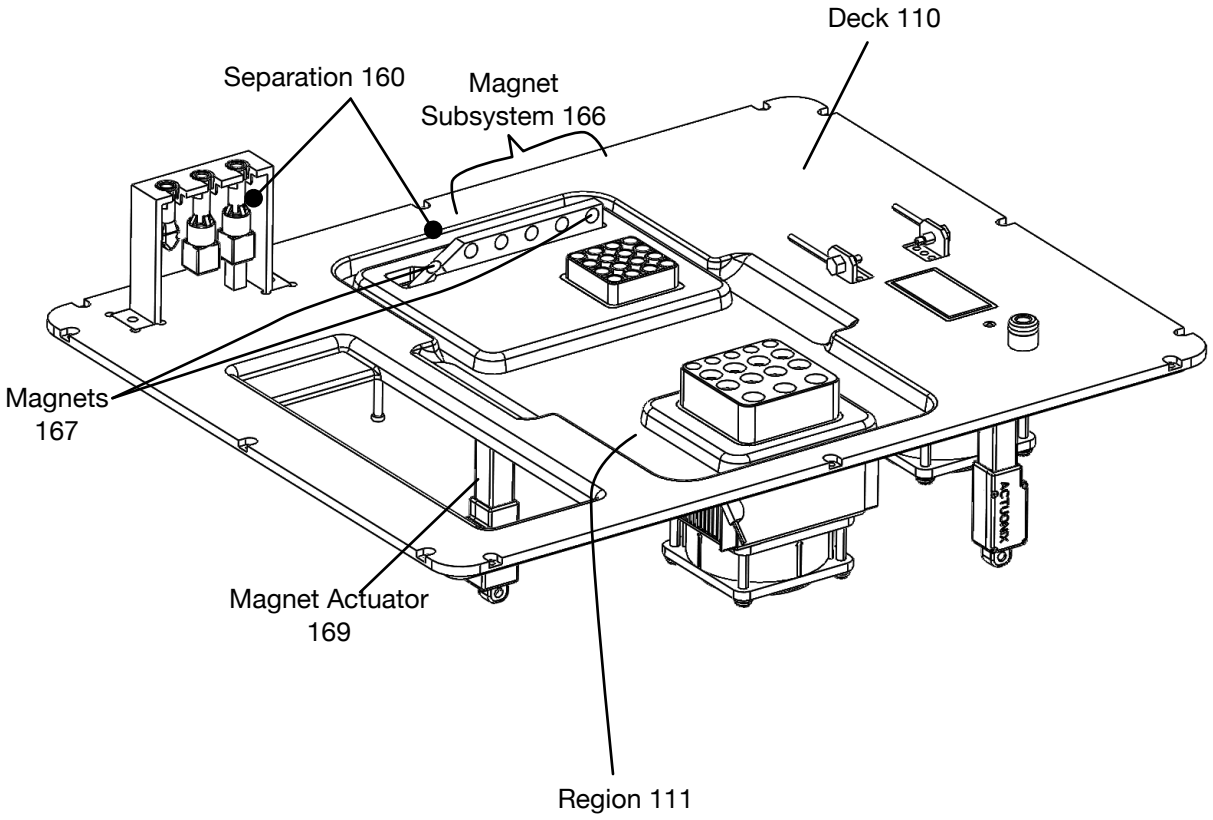
Deck 110
Separation 160
Magnet
Subsystem 166
Magnets
167
Magnet Actuator
169
Region 111

FIGURE 11A

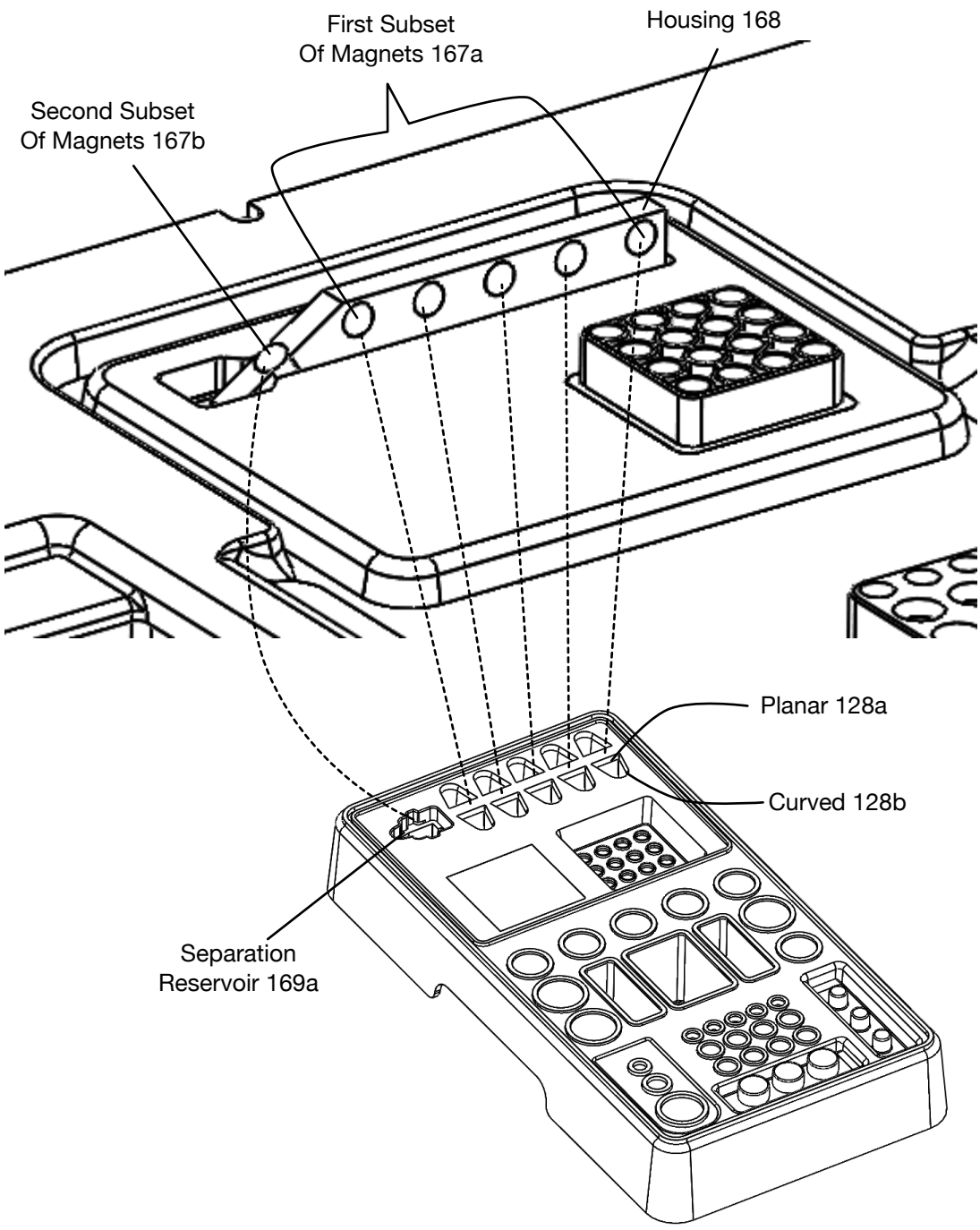
First Subset
Of Magnets 167a
Housing 168
Second Subset
Of Magnets 167b
Planar 128a
Curved 128b
Separation
Reservoir 169a

FIGURE 11B

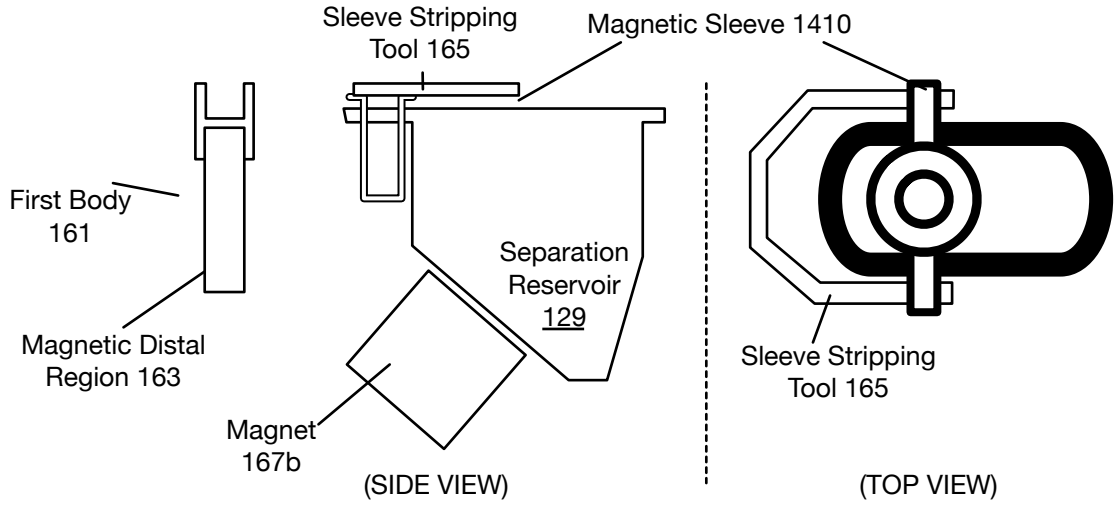

FIGURE 12A

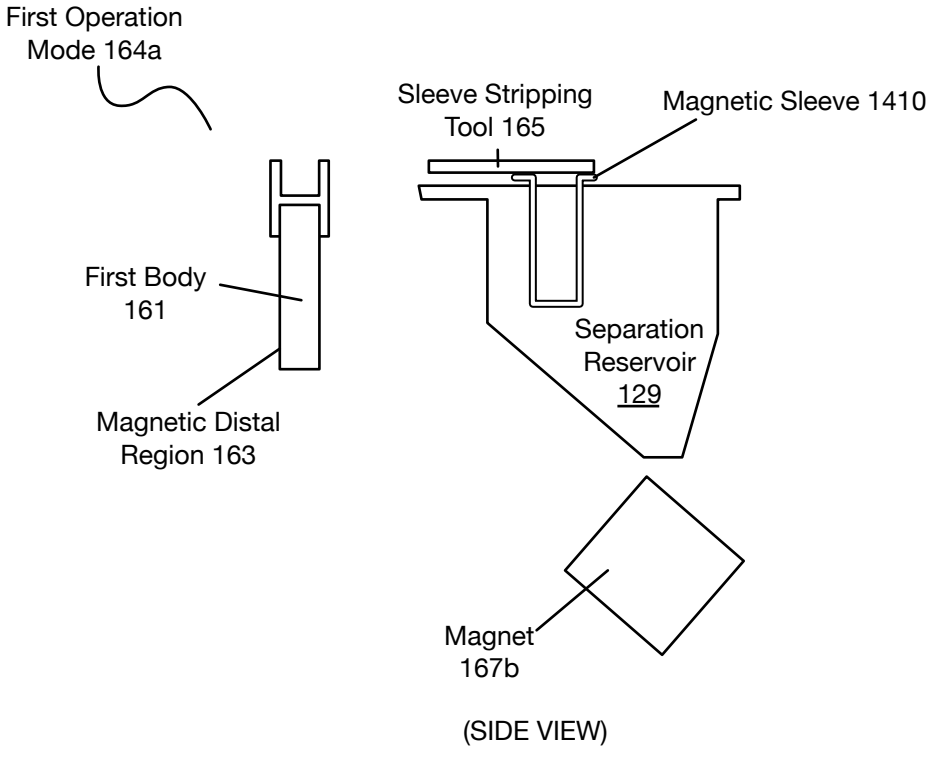

FIGURE 12B

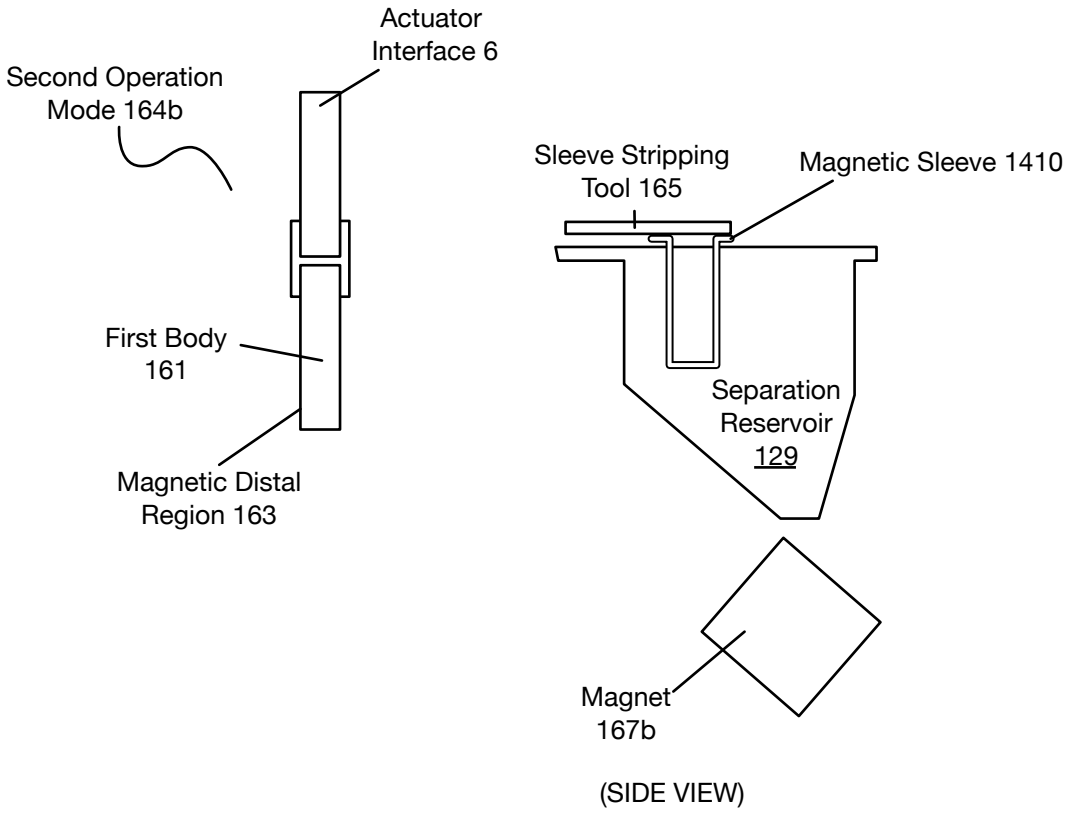
Actuator
Interface 6
Second Operation
Mode 164b
First Body
161
Magnetic Distal
Region 163
Sleeve Stripping
Tool 165
Magnetic Sleeve 1410
Separation
Reservoir
129
Magnet
167b
(SIDE VIEW)

FIGURE 12C

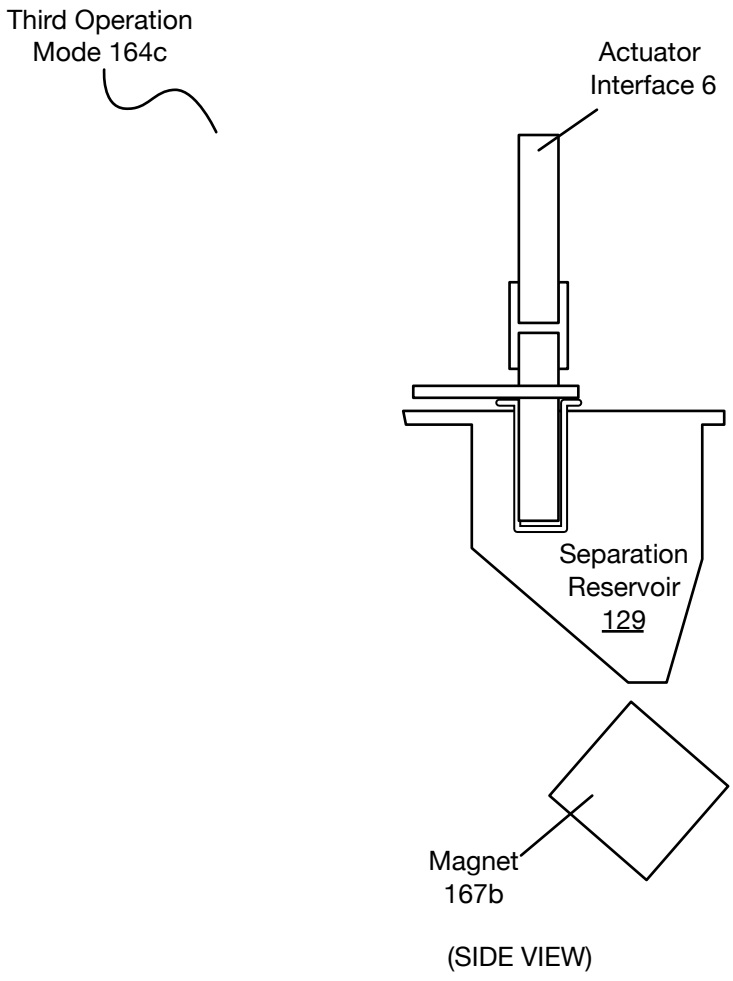
Third Operation
Mode 164c
Actuator
Interface 6
Separation
Reservoir
129
Magnet
167b
(SIDE VIEW)

FIGURE 12D

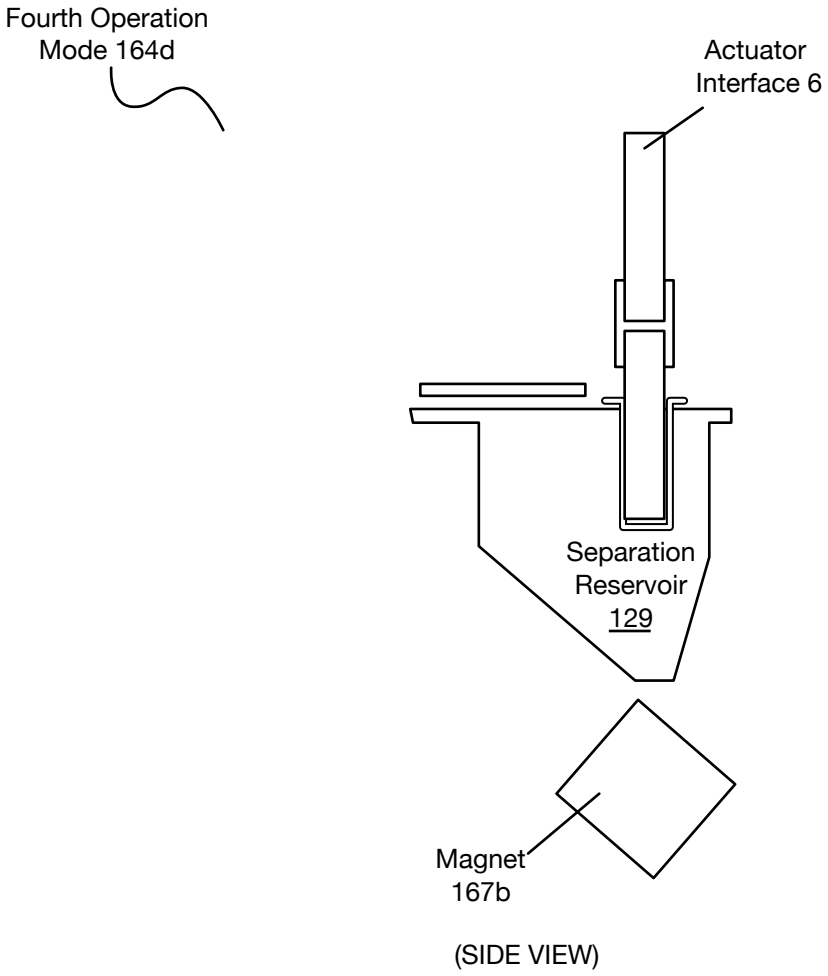
Fourth Operation Mode 164d
Actuator Interface 6
Separation Reservoir 129
Magnet 167b
(SIDE VIEW)

FIGURE 12E

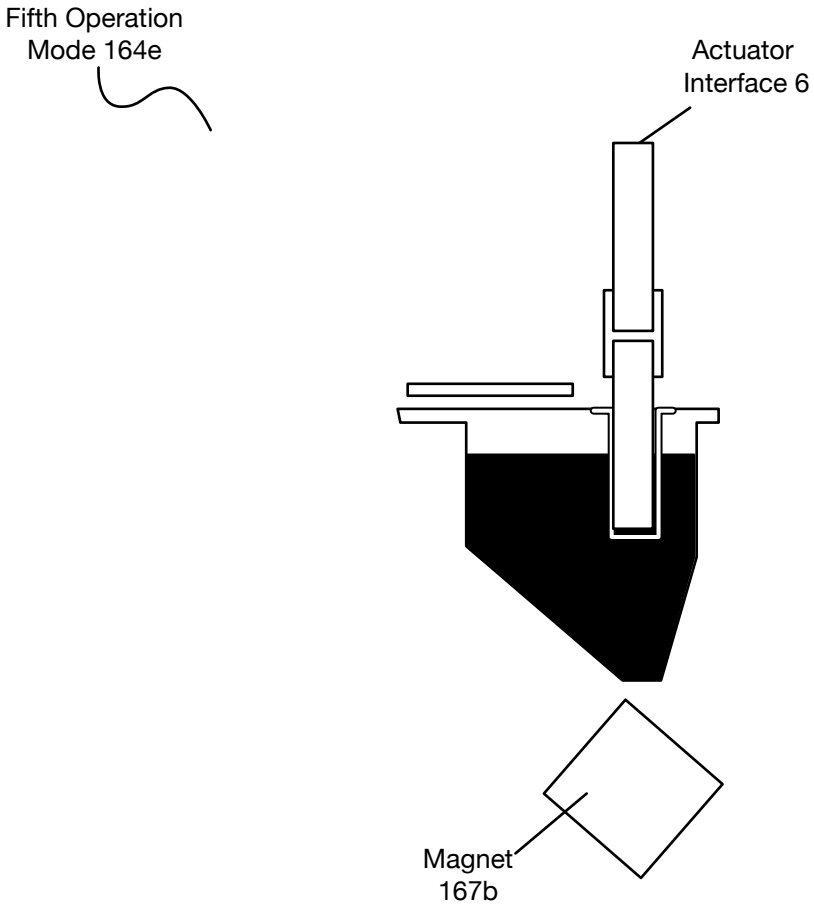
Fifth Operation
Mode 164e
Actuator
Interface 6
Magnet
167b
(SIDE VIEW)

FIGURE 12F

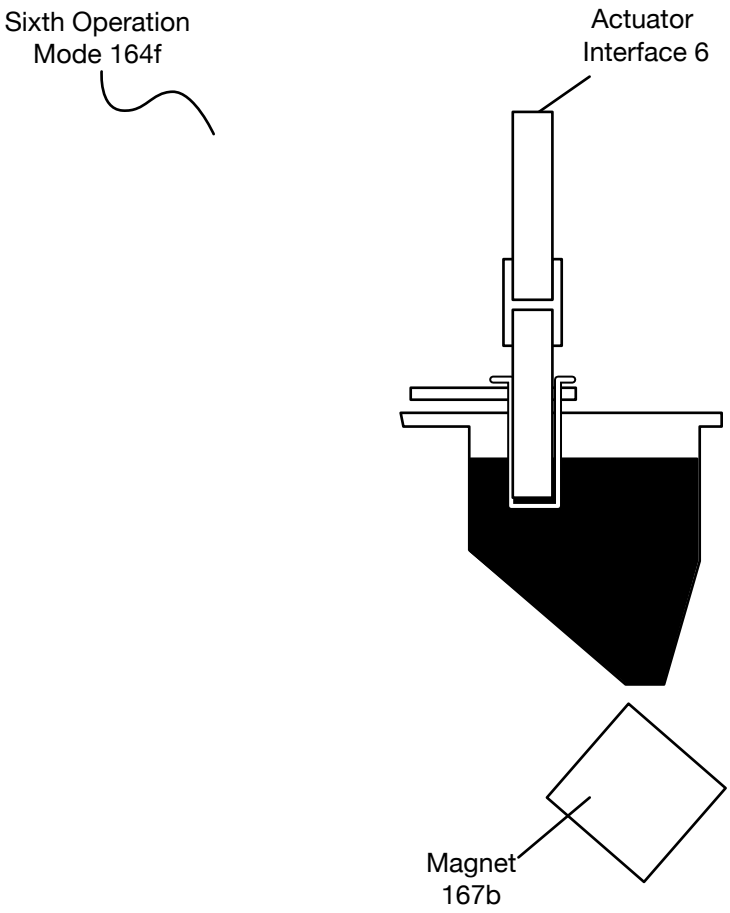
Sixth Operation Mode 164f
Actuator Interface 6
Magnet 167b
(SIDE VIEW)

FIGURE 12G

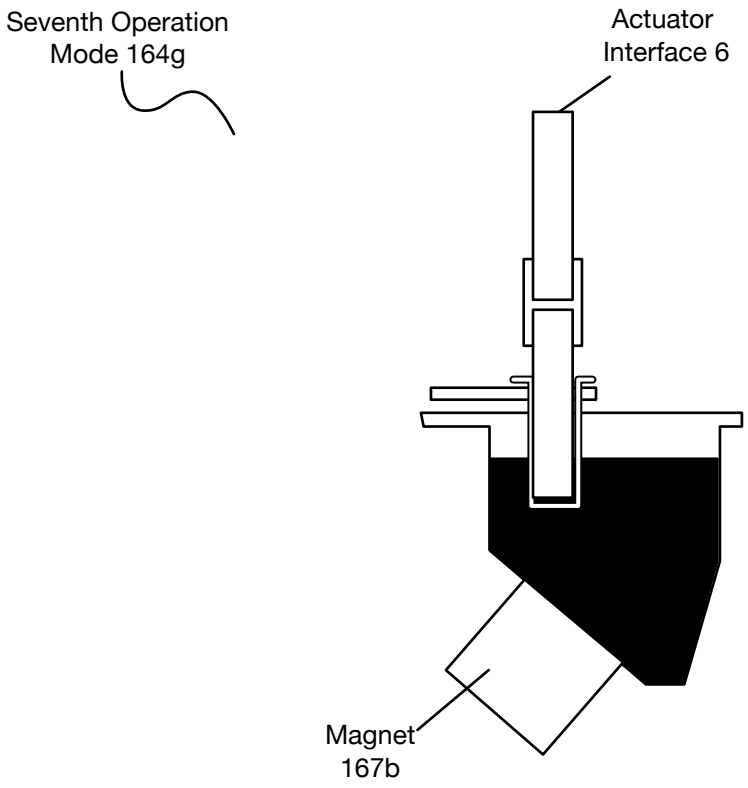

(SIDE VIEW)

FIGURE 12H

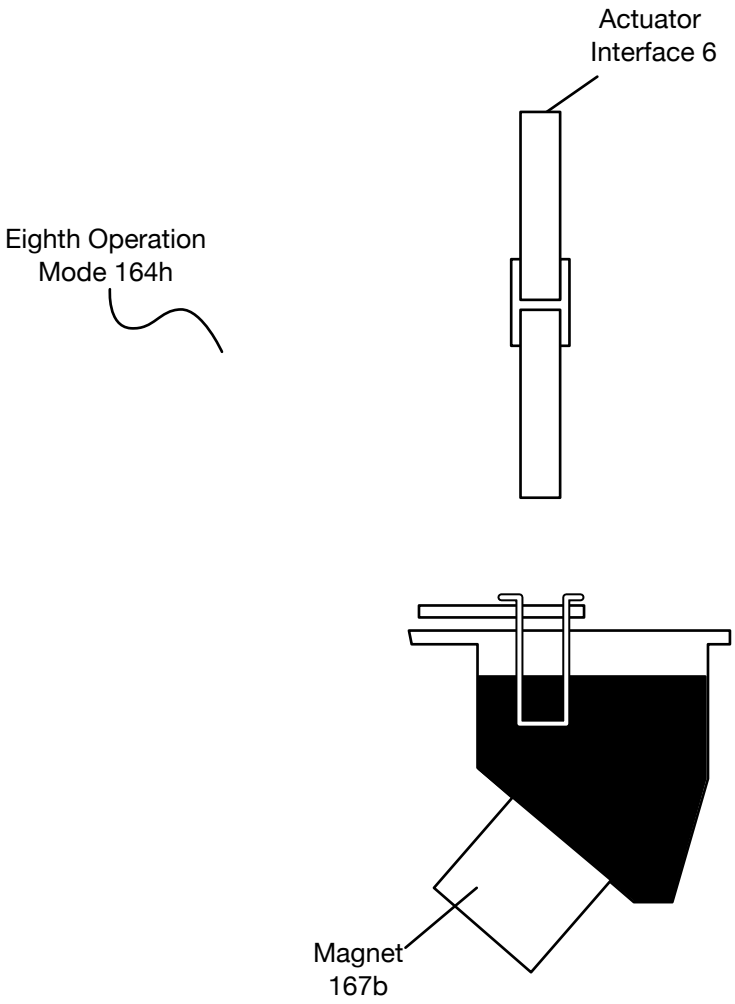

(SIDE VIEW)

FIGURE 12I

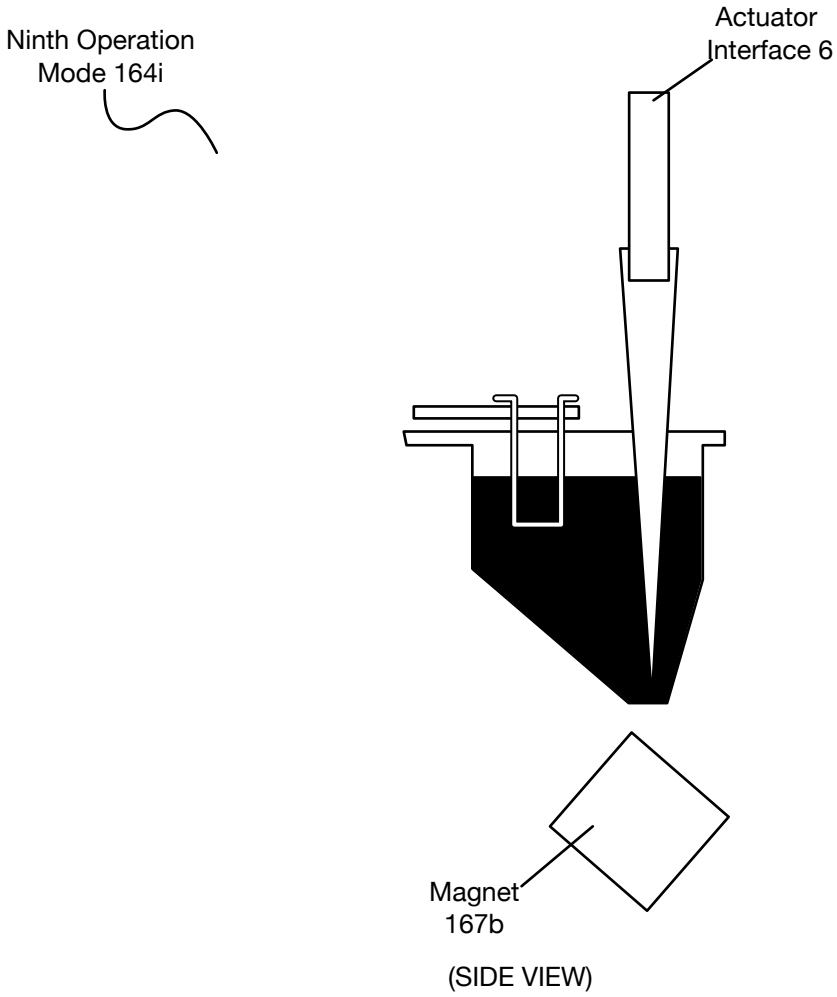
Ninth Operation Mode 164i
Actuator Interface 6
Magnet 167b
(SIDE VIEW)

FIGURE 12J

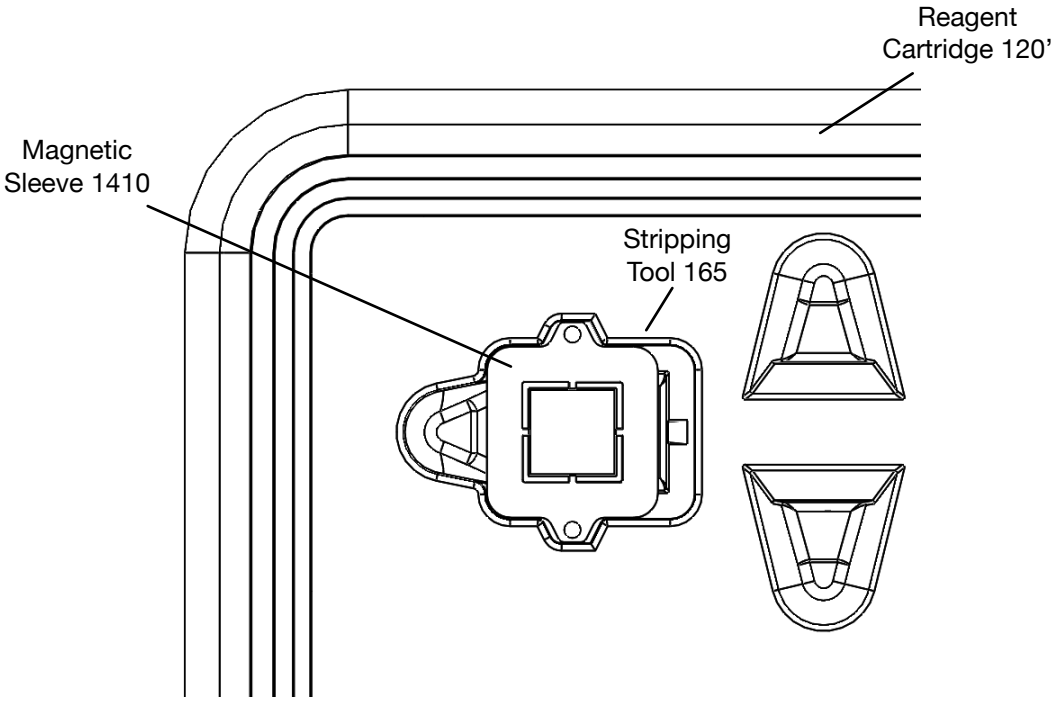

FIGURE 13A

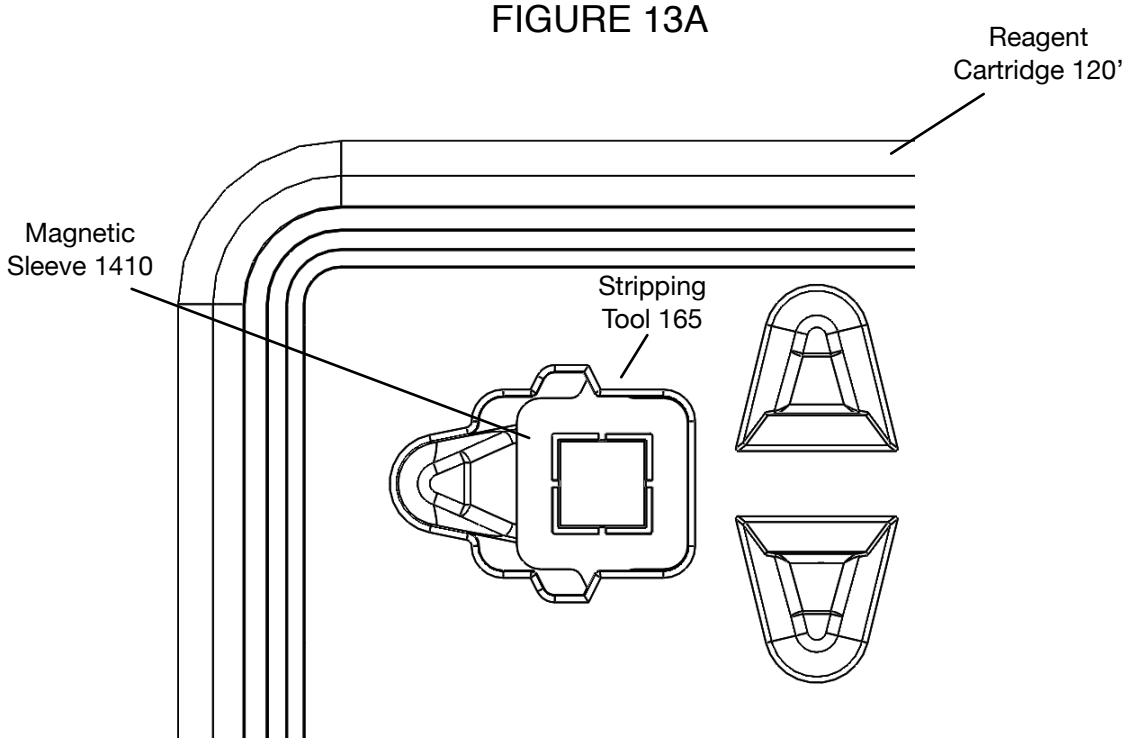

FIGURE 13B

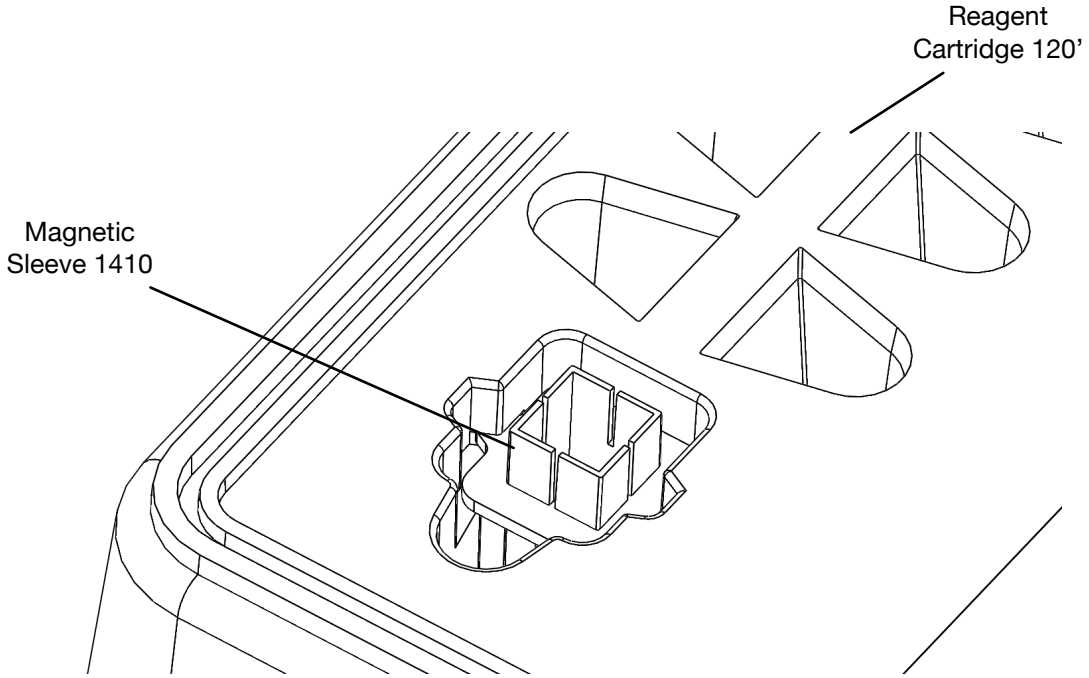

FIGURE 13C

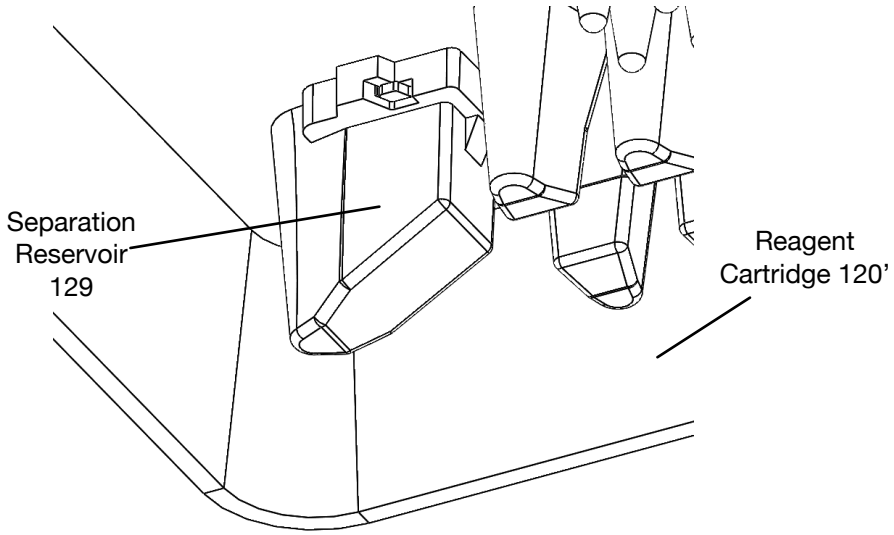

FIGURE 13D

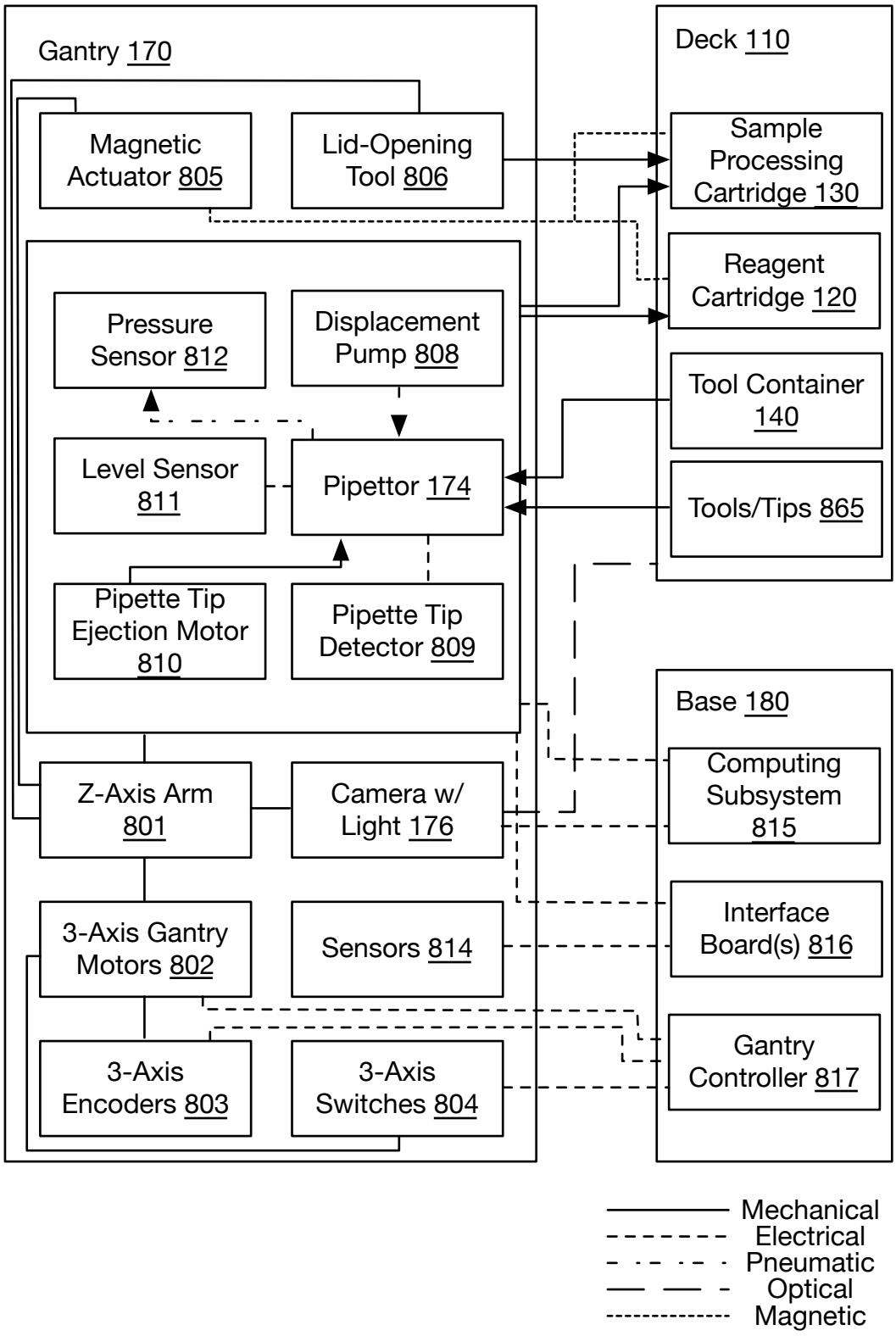
Gantry 170
Magnetic Actuator 805
Lid-Opening Tool 806
Pressure Sensor 812
Displacement Pump 808
Level Sensor 811
Pipettor 174
Pipette Tip Ejection Motor 810
Pipette Tip Detector 809
Z-Axis Arm 801
Camera w/ Light 176
3-Axis Gantry Motors 802
Sensors 814
3-Axis Encoders 803
3-Axis Switches 804
Deck 110
Sample Processing Cartridge 130
Reagent Cartridge 120
Tool Container 140
Tools/Tips 865
Base 180
Computing Subsystem 815
Interface Board(s) 816
Gantry Controller 817
Mechanical
Electrical
Pneumatic
Optical
Magnetic

FIGURE 14A

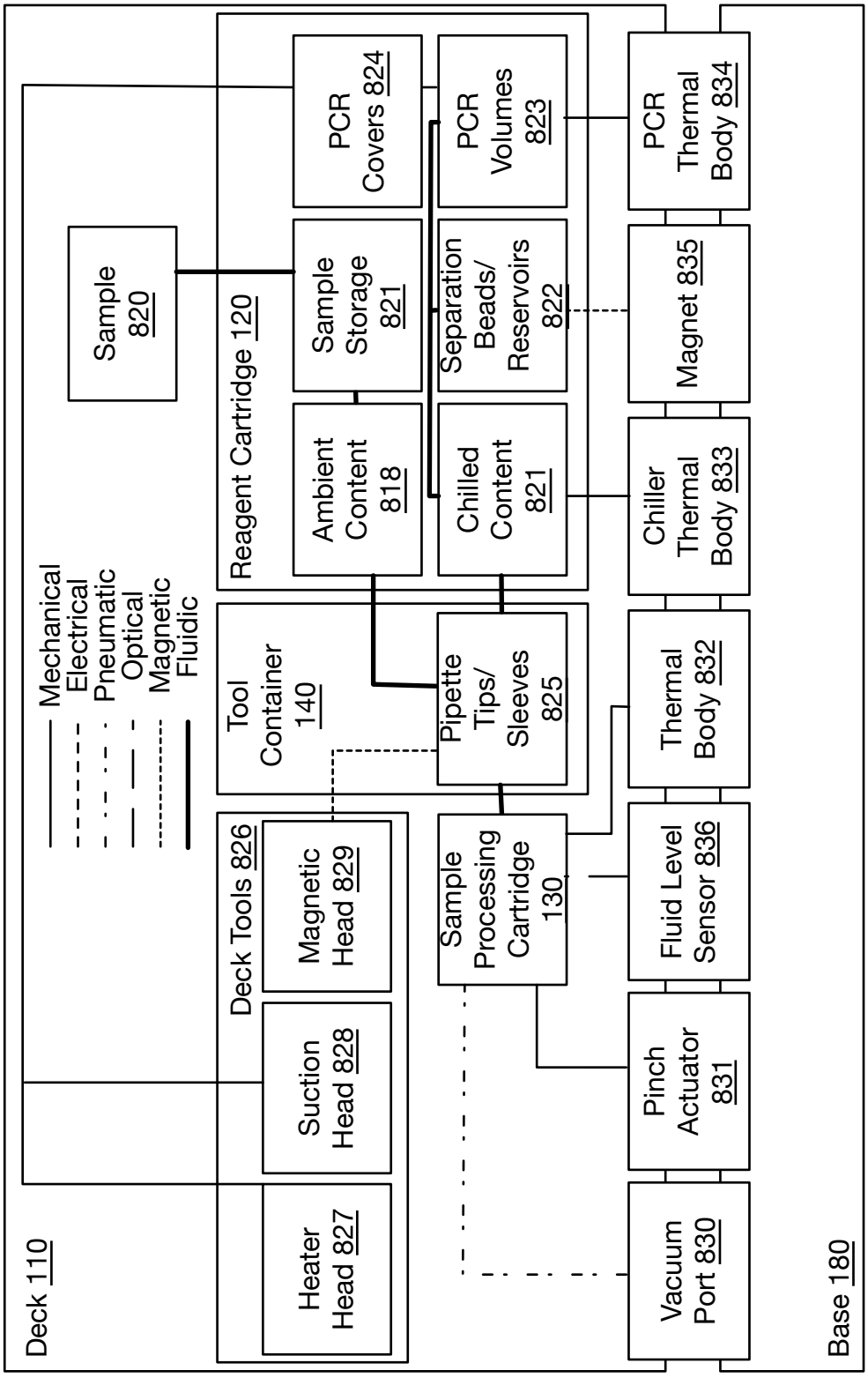
Deck 110
Base 180
Mechanical
Electrical
Pneumatic
Optical
Magnetic
Fluidic
Sample 820
Reagent Cartridge 120
Sample Storage 821
Ambient Content 818
PCR Covers 824
PCR Volumes 823
Separation Beads/ Reservoirs 822
Chilled Content 821
PCR Thermal Body 834
Magnet 835
Chiller Thermal Body 833
Tool Container 140
Pipette Tips/ Sleeves 825
Thermal Body 832
Deck Tools 826
Magnetic Head 829
Suction Head 828
Heater Head 827
Sample Processing Cartridge 130
Fluid Level Sensor 836
Pinch Actuator 831
Vacuum Port 830

FIGURE 14B

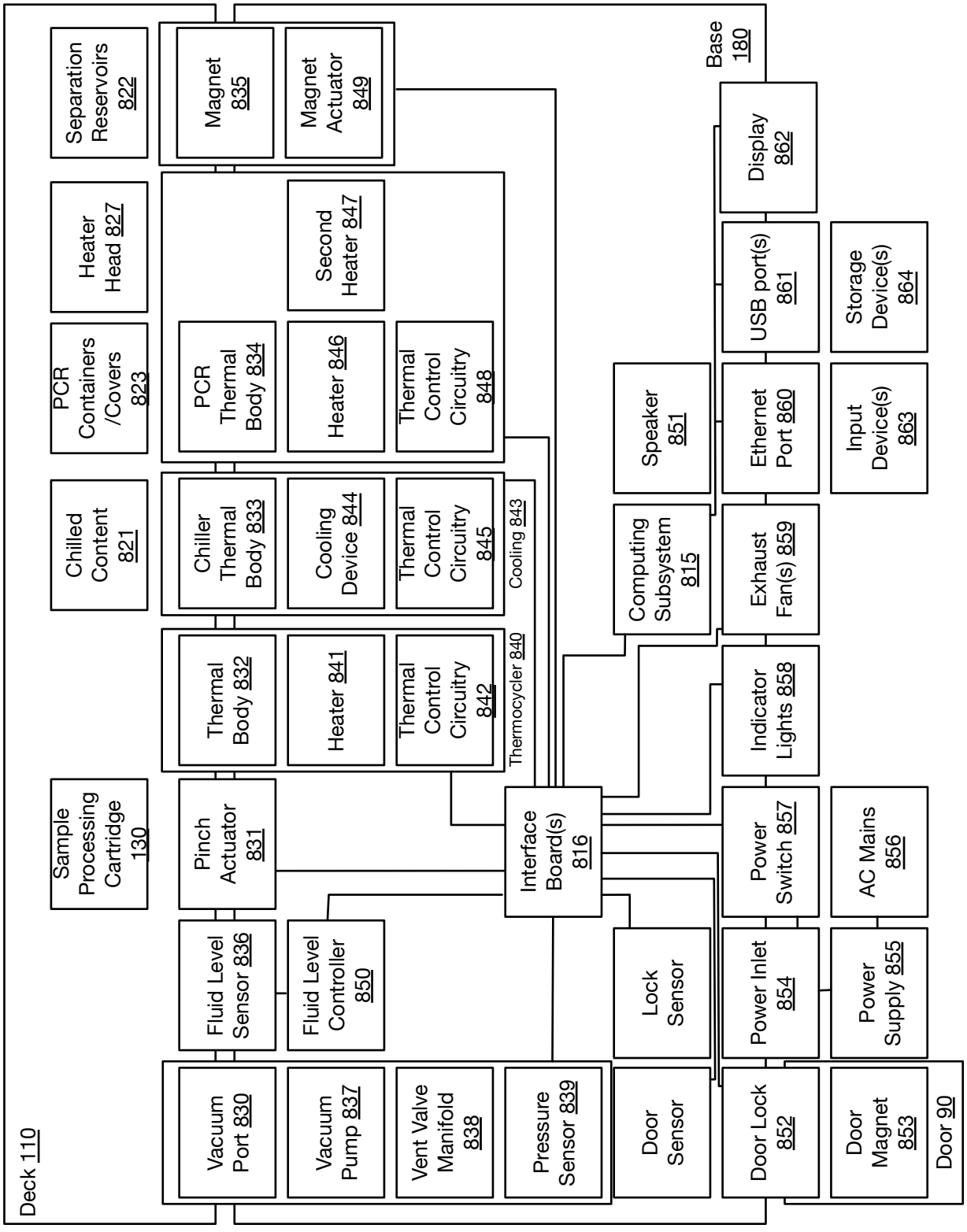
Deck 110
Base 180
Separation Reservoirs 822
Heater Head 827
PCR Containers /Covers 823
Chilled Content 821
Sample Processing Cartridge 130
Magnet 835
Magnet Actuator 849
PCR Thermal Body 834
Second Heater 847
Heater 846
Thermal Control Circuitry 848
Chiller Thermal Body 833
Cooling Device 844
Thermal Control Circuitry 845
Cooling 843
Thermal Body 832
Heater 841
Thermal Control Circuitry 842
Thermocycler 840
Pinch Actuator 831
Fluid Level Sensor 836
Fluid Level Controller 850
Vacuum Port 830
Vacuum Pump 837
Vent Valve Manifold 838
Pressure Sensor 839
Interface Board(s) 816
Lock Sensor
Door Sensor
Computing Subsystem 815
Speaker 851
Display 862
USB port(s) 861
Storage Device(s) 864
Ethernet Port 860
Input Device(s) 863
Exhaust Fan(s) 859
Indicator Lights 858
Power Switch 857
AC Mains 856
Power Inlet 854
Power Supply 855
Door Lock 852
Door Magnet 853
Door 90

FIGURE 14C

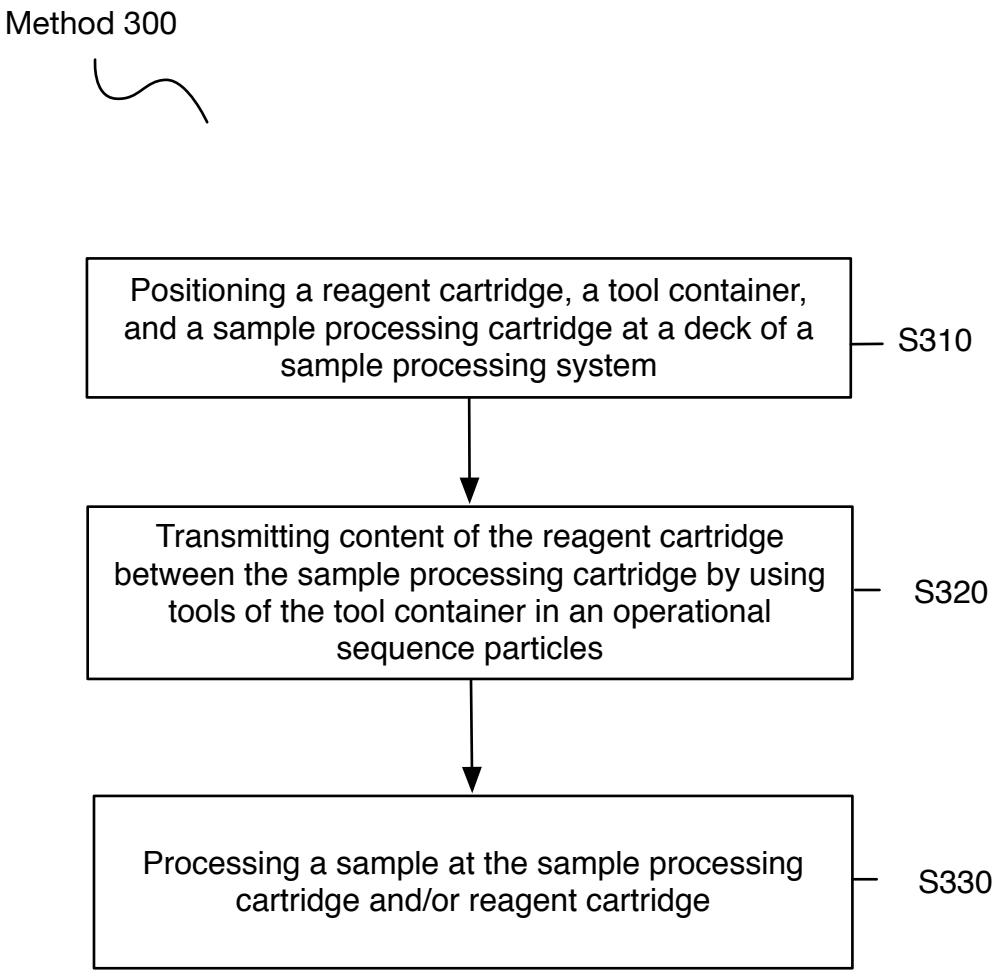
Method 300
Positioning a reagent cartridge, a tool container, and a sample processing cartridge at a deck of a sample processing system
S310
Transmitting content of the reagent cartridge between the sample processing cartridge by using tools of the tool container in an operational sequence particles
S320
Processing a sample at the sample processing cartridge and/or reagent cartridge
S330

FIGURE 15

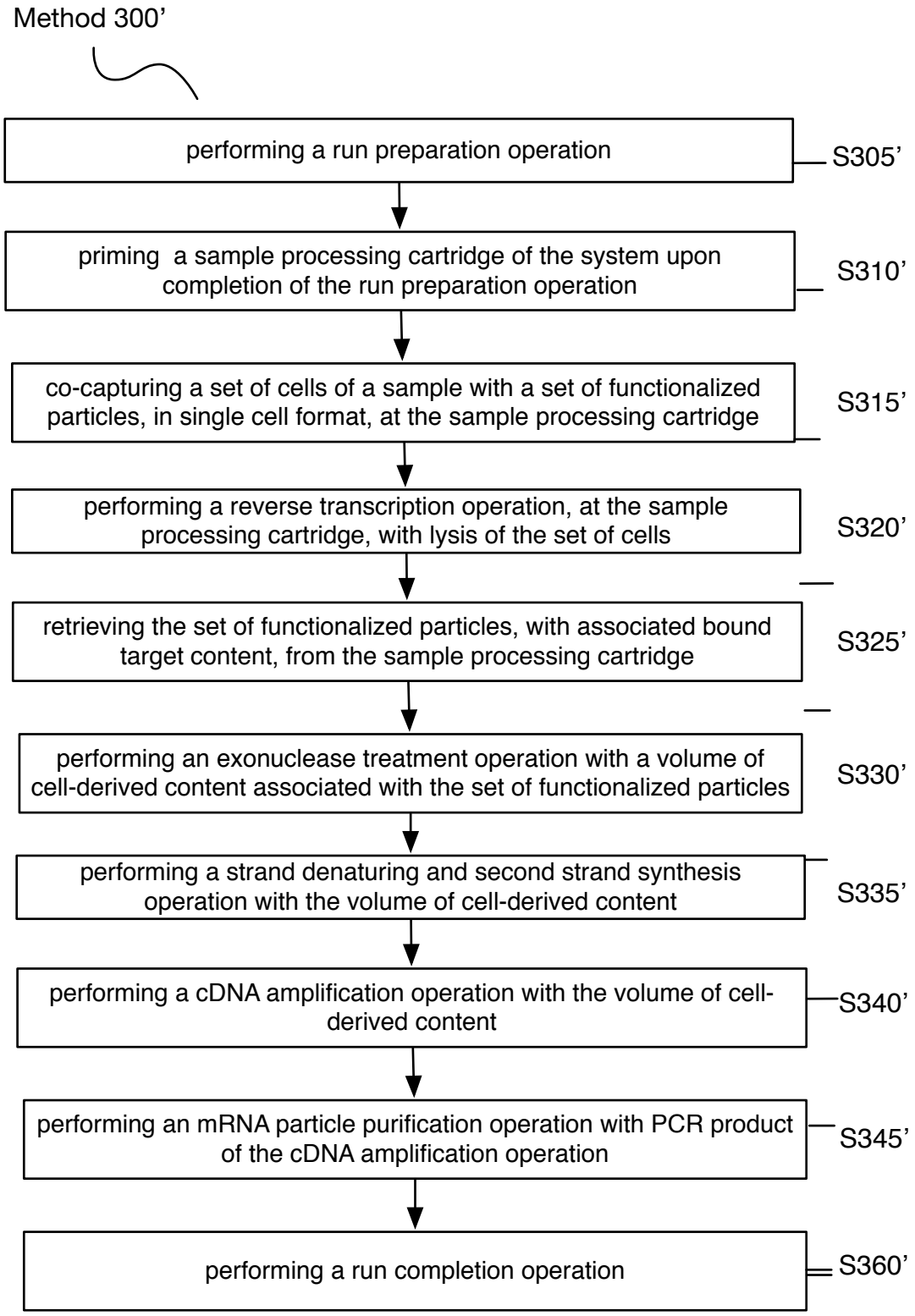
Method 300'
performing a run preparation operation
S305'
priming a sample processing cartridge of the system upon completion of the run preparation operation
S310'
co-capturing a set of cells of a sample with a set of functionalized particles, in single cell format, at the sample processing cartridge
S315'
performing a reverse transcription operation, at the sample processing cartridge, with lysis of the set of cells
S320'
retrieving the set of functionalized particles, with associated bound target content, from the sample processing cartridge
S325'
performing an exonuclease treatment operation with a volume of cell-derived content associated with the set of functionalized particles
S330'
performing a strand denaturing and second strand synthesis operation with the volume of cell-derived content
S335'
performing a cDNA amplification operation with the volume of cell-derived content
S340'
performing an mRNA particle purification operation with PCR product of the cDNA amplification operation
S345'
performing a run completion operation
S360'

FIGURE 16

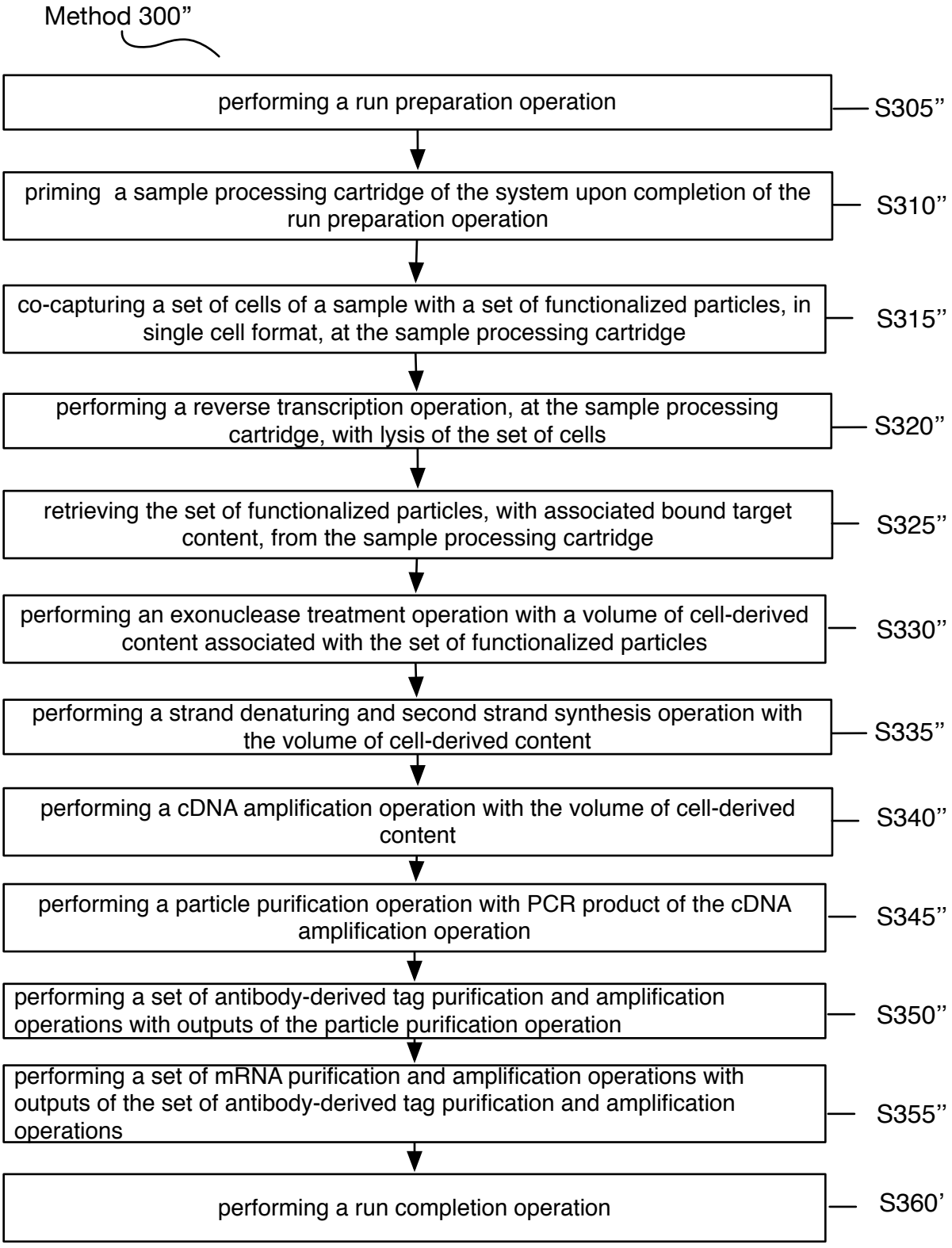
Method 300”
performing a run preparation operation
S305”
priming a sample processing cartridge of the system upon completion of the run preparation operation
S310”
co-capturing a set of cells of a sample with a set of functionalized particles, in single cell format, at the sample processing cartridge
S315”
performing a reverse transcription operation, at the sample processing cartridge, with lysis of the set of cells
S320”
retrieving the set of functionalized particles, with associated bound target content, from the sample processing cartridge
S325”
performing an exonuclease treatment operation with a volume of cell-derived content associated with the set of functionalized particles
S330”
performing a strand denaturing and second strand synthesis operation with the volume of cell-derived content
S335”
performing a cDNA amplification operation with the volume of cell-derived content
S340”
performing a particle purification operation with PCR product of the cDNA amplification operation
S345”
performing a set of antibody-derived tag purification and amplification operations with outputs of the particle purification operation
S350”
performing a set of mRNA purification and amplification operations with outputs of the set of antibody-derived tag purification and amplification operations
S355”
performing a run completion operation
S360’

FIGURE 17

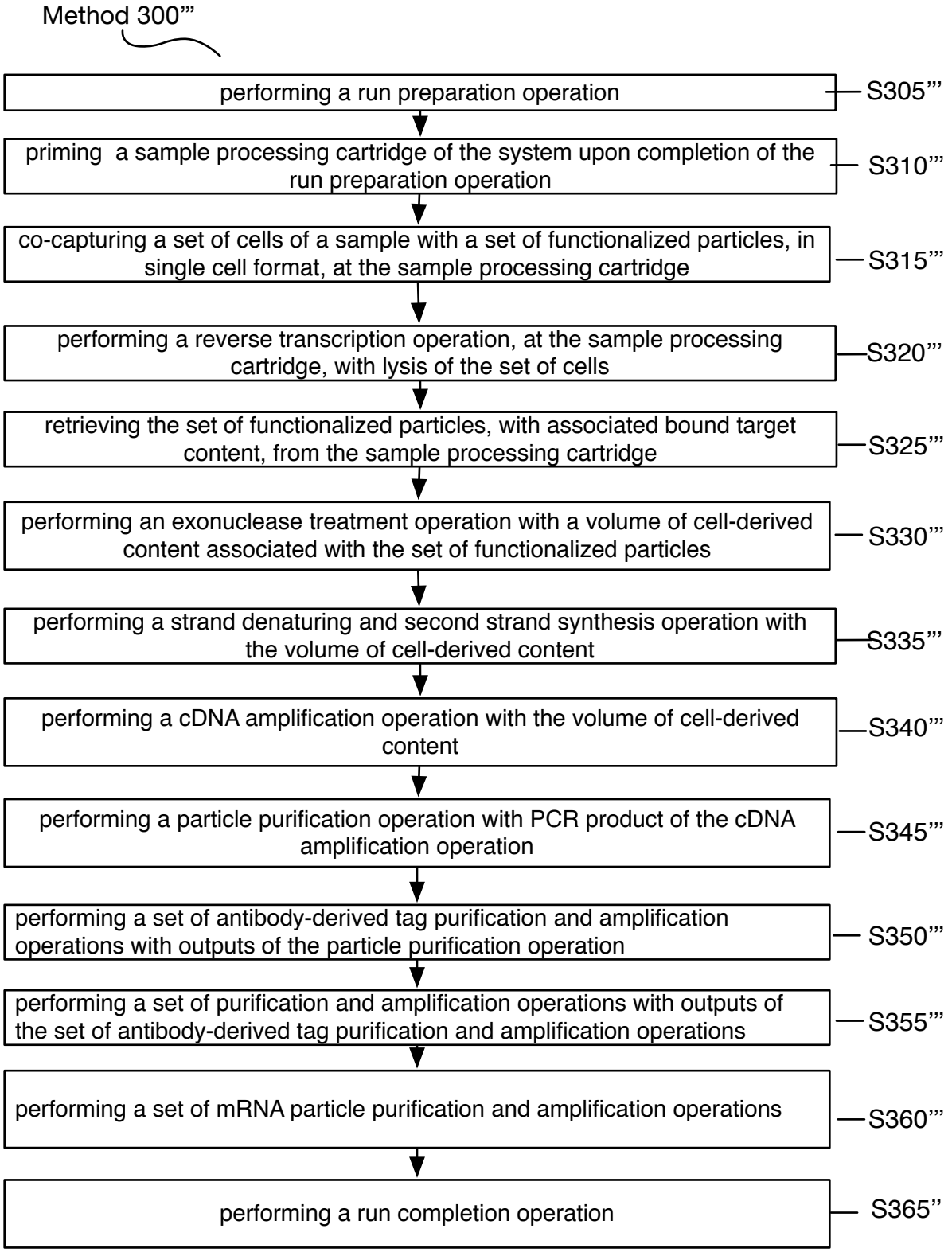
Method 300'''
performing a run preparation operation
S305'''
priming a sample processing cartridge of the system upon completion of the run preparation operation
S310'''
co-capturing a set of cells of a sample with a set of functionalized particles, in single cell format, at the sample processing cartridge
S315'''
performing a reverse transcription operation, at the sample processing cartridge, with lysis of the set of cells
S320'''
retrieving the set of functionalized particles, with associated bound target content, from the sample processing cartridge
S325'''
performing an exonuclease treatment operation with a volume of cell-derived content associated with the set of functionalized particles
S330'''
performing a strand denaturing and second strand synthesis operation with the volume of cell-derived content
S335'''
performing a cDNA amplification operation with the volume of cell-derived content
S340'''
performing a particle purification operation with PCR product of the cDNA amplification operation
S345'''
performing a set of antibody-derived tag purification and amplification operations with outputs of the particle purification operation
S350'''
performing a set of purification and amplification operations with outputs of the set of antibody-derived tag purification and amplification operations
S355'''
performing a set of mRNA particle purification and amplification operations
S360'''
performing a run completion operation
S365''

FIGURE 18

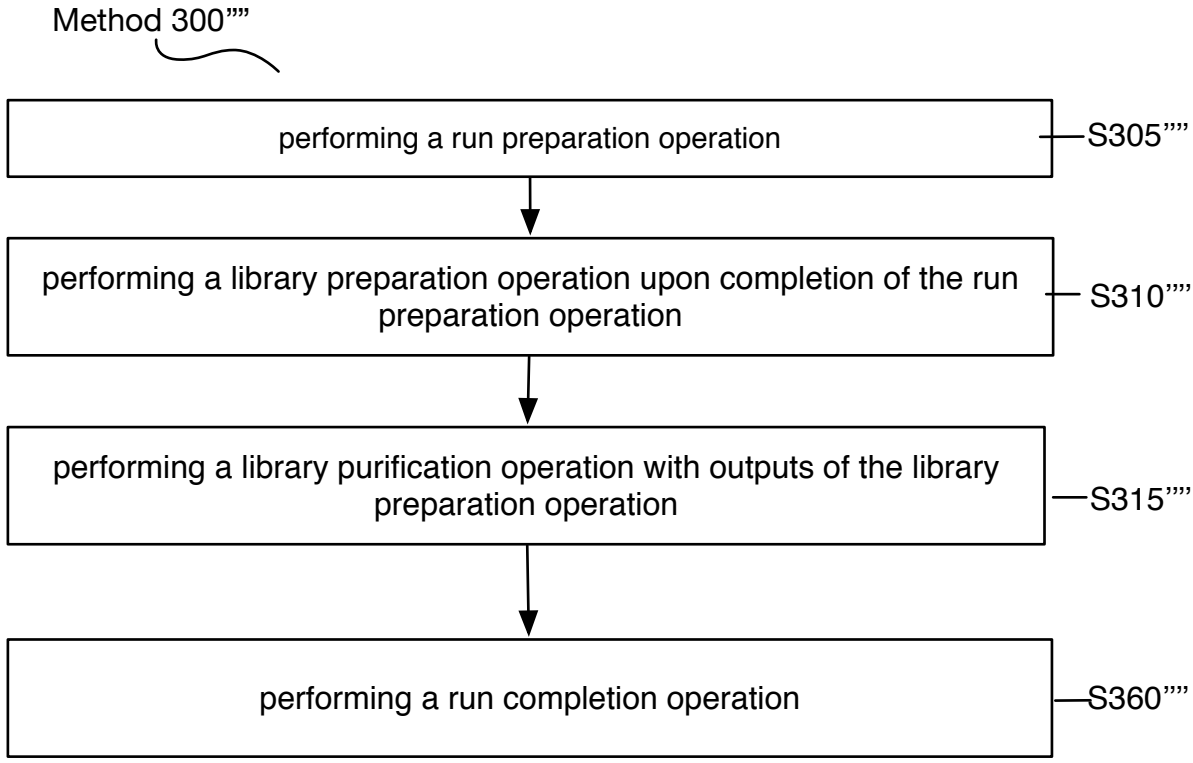
Method 300””
performing a run preparation operation
S305””
performing a library preparation operation upon completion of the run preparation operation
S310””
performing a library purification operation with outputs of the library preparation operation
S315””
performing a run completion operation
S360””

FIGURE 19